INEEL-EXT-98-00834
Revision 2.0
July 2002

RELAP5-3D© Code Manual Volume V: User's Guidelines

R. R. Schultz

Idaho National Engineering and Environmental Laboratory
Bechtel BWXT Idaho, LLC

INEEL-EXT-98-00834
Volume V
Revision 2.0

RELAP5-3D© CODE MANUAL
VOLUME V: USER'S GUIDELINES

R. R. Schultz

Original Manuscript Completed:
February 1999
Revision 2.0 Completed:
July 2002

Idaho National Engineering and Environmental Laboratory
Idaho Falls, Idaho 83415

Prepared Under DOE Idaho Field Office
Contract No. DE-AC07-99ID13727

The RELAP5-3D© manuals are living documents and are being corrected and updated continuously. A printed version of the manuals is frozen and archived when a code version is released. This version of the manual corresponds to RELAP5-3D© version 2.0, released in July, 2002.

ABSTRACT

The RELAP5-3D© code has been developed for best-estimate transient simulation of light water reactor coolant systems during postulated accidents. The code models the coupled behavior of the reactor coolant system and the core for loss-of-coolant accidents, and operational transients, such as anticipated transient without scram, loss of offsite power, loss of feedwater, and loss of flow. A generic modeling approach is used that permits simulating a variety of thermal hydraulic systems. Control system and secondary system components are included to permit modeling of plant controls, turbines, condensers, and secondary feedwater systems.

RELAP5-3D© code documentation is divided into six volumes: Volume I provides modeling theory and associated numerical schemes; Volume II contains detailed instructions for code application and input data preparation; Volume III provides the results of developmental assessment cases that demonstrate and verify the models used in the code; Volume IV presents a detailed discussion of RELAP5-3D© models and correlations; Volume V contains guidelines that have evolved over the past several years through the use of the RELAP5-3D© code; and Volume VI discusses the numerical scheme used in RELAP5-3D©.

CONTENTS

1 Introduction 1-1

1.0.1 Reference 1-1

2 Fundamental Practices 2-1

2.1 Capability of RELAP5-3D© 2-1

2.1.1 Assessing Use of the Code 2-2
2.1.2 Structural Analysis Using RELAP5-3D© 2-2
2.1.3 References 2-5

2.2 Description of Thermal-Hydraulic Analysis 2-6

2.2.1 Gathering and Organizing Information 2-7
2.2.2 Defining and Nodalizing the Problem 2-10
2.2.3 Obtaining the Boundary and Initial Conditions 2-18
2.2.4 Running and Analyzing the Problem 2-19
2.2.5 References 2-21

2.3 Basic RELAP5-3D© Modeling Units 2-21

2.3.1 Thermal-Hydraulic Group 2-25
2.3.2 Heat Structures 2-25
2.3.3 Trips and Control Variables 2-25

2.4 Basic RELAP5-3D© Modeling Guidelines 2-26

2.4.1 Simulating the System Flow Paths 2-27
2.4.2 Simulating the System's Heat Structures 2-28
2.4.3 Trips and Control Variables 2-28

3 General Practices 3-1

3.1 Standard Procedures 3-1

3.1.1 Input Preparation 3-1
3.1.2 Model Input Debugging 3-6
3.1.3 Problem Execution 3-8
3.1.4 Code Output 3-11

3.2 Calculational Node and Mesh Sizes 3-18

3.2.1 Hydrodynamic Cell Size 3-19
3.2.2 Heat Structure Mesh Size 3-20
3.2.3 References 3-23

3.3 General Option Selection 3-23

3.3.1 Volume-Related Options 3-24
3.3.2 Junction-Related Options 3-25
3.3.3 Initial Condition Options 3-27
3.3.4 Boundary Condition Options 3-29

3.4 Special Model Applications 3-33

3.4.1 Break Modeling 3-33
3.4.2 Boron Model 3-36
3.4.3 Noncondensable Model 3-37

3.4.4 Reflood Model 3-38
3.4.5 Crossflow Junction Model 3-38
3.4.6 Countercurrent Flow Limiting Model 3-52
3.4.7 Control System Modeling 3-52
3.4.8 Level Tracking Model 3-57
3.4.9 Thermal Stratification Model 3-59
3.4.10 Reference 3-59

4 Specific Practices 4-1

4.1 Problem Control Options 4-1

4.1.1 Format Considerations 4-1
4.1.2 Problem Type -- Card 100 4-2
4.1.3 Input Check/Run -- Card 101 4-3
4.1.4 Units Selection -- Card 102 4-3
4.1.5 Restart Control -- Cards 103 and 104 4-4
4.1.6 Central Processing Unit Time Control -- Card 105 4-4
4.1.7 Noncondensable Gas Type -- Cards 110 and 115 4-5
4.1.8 Hydrodynamic System Definitions -- Cards 120 through 129 4-5
4.1.9 Self-Initialization Options -- Cards 140 through 147 4-6
4.1.10 Reference 4-7

4.2 Time Step Control 4-7

4.3 Minor Edit and Expanded Edit/Plot Variable Requests 4-8

4.3.1 Minor Edit Requests 4-8
4.3.2 Expanded Edit/Plot Variable Requests 4-10

4.4 Trips 4-10

4.4.1 Variable Trips 4-11
4.4.2 Logical Trips 4-12
4.4.3 Terminating a Calculation by Trip 4-15

4.5 Interactive Variables 4-16

4.6 Hydrodynamic Components 4-16

4.6.1 Single-Volume Component 4-16
4.6.2 Time-Dependent Volume Component 4-19
4.6.3 Single-Junction Component 4-22
4.6.4 Time-Dependent Junction Component 4-24
4.6.5 Pipe, Annulus, and Pressurizer Components 4-25
4.6.6 Branch, Separator, Jetmixer, Turbine, and ECC-Mixer Components 4-26
4.6.7 Valve Component 4-29
4.6.8 Pump Component 4-31
4.6.9 Multiple-Junction Component 4-39
4.6.10 Accumulator Component 4-39
4.6.11 Multi-Dimensional Component 4-39
4.6.12 Reference 4-43

4.7 Heat Structures 4-43

4.7.1 General Heat Structure Input and Dimensioning Data 4-44
4.7.2 Heat Structure Input Common to All Structures in the Group 4-45

4.7.3 Heat Structure Input Specific to Individual Structures 4-47
4.8 General Tables 4-49
4.9 Reactor Kinetics 4-50
4.10 Control Variables 4-54
4.11 RELAP5-3D© Internal Plotting Routine 4-62
5 Pressurized Water Reactor Example Applications 5-1
5.1 Westinghouse Plants (Base Case) 5-1
5.1.1 Reactor Vessel 5-1
5.1.2 Hot and Cold Legs and Steam Generator Primaries 5-3
5.1.3 Steam Generator Secondaries 5-5
5.1.4 Pressurizer 5-8
5.1.5 Reactor Coolant Pump 5-8
5.1.6 Balance-of-Plant Systems 5-10
5.1.7 Plant Control Systems 5-13
5.1.8 Modeling a Large Break Loss-of-Coolant Accident 5-17
5.1.9 References 5-23
5.2 Unique Features of Babcock & Wilcox Plants 5-23
5.2.1 Reactor Vessel 5-23
5.2.2 Steam Generator 5-26
5.2.3 Hot Leg 5-28
5.2.4 Cold Leg 5-28
5.2.5 Plant Control Systems 5-29
5.2.6 Reference 5-31
5.3 Unique Features of Combustion Engineering, Inc. Plants 5-31
5.4 Notes on Modeling Pressurized Water Reactor Metal Structures 5-33
5.5 Lumping Coolant Loops 5-34
5.6 Model Assembly Methods 5-36
5.6.1 References 5-38
5.7 Obtaining Satisfactory Steady-State Conditions 5-38
5.7.1 General Method 5-38
5.7.2 Step 1-Reactor Vessel 5-40
5.7.3 Step 2-Steam Generator and Steam Lines 5-41
5.7.4 Step 3-Coolant Loop with Reactor Coolant Pump 5-42
5.7.5 Step 4-Feedwater System 5-42
5.7.6 Step 5-Formation of the System Model 5-43
5.7.7 Step 6-Control Systems 5-45
5.7.8 Step 7-Models of Non-operating Systems 5-45
5.7.9 Step 8-Final Tune-Up and Check-Out 5-46

FIGURES

Figure 2.1-1. RELAP5-3D© use analysis. 2-3
Figure 2.2-1. Nodalization of primary loop. 2-12
Figure 2.2-2. Nodalization of steam generator and secondary system. 2-13
Figure 2.2-3. Nodalization of reactor vessel. 2-14
Figure 2.2-4. Calculation worksheet for pressurizer nodalization. 2-16
Figure 2.2-5. Workshop problem steady-state with controllers (steam and feedwater mass flow rates). 2-19
Figure 2.4-1. Pressurizer heater rod controller: on-off (component 3421). 2-29
Figure 3.1-1. Sample model workbook page. 3-3
Figure 3.1-2. Example of full-commented input for a branch component number. 3-5
Figure 3.1-3. Sample major edit. 3-13
Figure 3.2-1. Heat structure noding. 3-21
Figure 3.2-2. Effect of Biot number on suggested surface node size. 3-23
Figure 3.3-1. Example of separate effects core model. 3-30
Figure 3.3-2. Simplified diagram of PWR system model boundary conditions. 3-31
Figure 3.4-1. Coolant system break modeling. 3-34
Figure 3.4-2. Volume with a crossflow junction. 3-39
Figure 3.4-3. Surge line/hot leg crossflow connection application. 3-41
Figure 3.4-4. RELAP5-3D© nodalization of a tee with crossflow junction. 3-42
Figure 3.4-5. Total pressure drop as a function of velocity ratio. 3-49
Figure 3.4-6. K loss factor as a function of velocity ratio. 3-49
Figure 3.4-7. Crossflow-connected core application. 3-51
Figure 3.4-8. Example of using control variables for side calculations. 3-54
Figure 3.4-9. Example of using control variables for specifying complex boundary conditions. 3-56
Figure 3.4-10. Example of using control variables in modeling actual control systems. 3-58
Figure 4.6-1. Single-phase homologous head curves for 1-1/2 loop MOD1 Semiscale pumps. 4-35
Figure 4.6-2. Multi-dimensional hydrodynamics Cartesian grid. 4-41
Figure 4.6-3. Multi-dimenstional hydrodynamics cylindrical grid. 4-41
Figure 4.7-1. An example of mesh format dimensions. 4-46
Figure 4.8-1. An example of core power data - function of time. 4-50
Figure 4.9-1. An example of a reactor kinetics input data set. 4-52
Figure 4.10-1. An example of control system input to simulate control rod reactivity. 4-59
Figure 5.1-1. Nodalization of reactor vessel. 5-2
Figure 5.1-2. Nodalization of primary coolant pump (Loop C shown). 5-4
Figure 5.1-3. Nodalization of steam generators. 5-6
Figure 5.1-4. Nodalization of pressurizer. 5-9

Figure 5.1-5. Nodalization of feedwater and steam systems. 5-11
Figure 5.1-6. Block diagram of load rejection controller. 5-14
Figure 5.1-7. Load rejection controller valve response. 5-15
Figure 5.1-8. Functional block diagram of the steam generator level control system. 5-16
Figure 5.1-9. Block diagram of pressurizer pressure control system. 5-17
Figure 5.1-10. Detailed Loss-of-Fluid Test nodalization for large break loss-of-coolant accident analysis. 5-19
Figure 5.1-11. Simplified nodalization of the Loss-of-Fluid Test system for large break loss-of-coolant accident analysis. 5-20
Figure 5.1-12. Detail of the nodalization of the Loss-of-Fluid Test core (average and hot channels). 5-21
Figure 5.2-1. Example Babcock & Wilcox reactor vessel nodalization. 5-25
Figure 5.2-2. Example Babcock & Wilcox steam generator nodalization. 5-27
Figure 5.2-3. Example Babcock & Wilcox coolant loop nodalization. 5-29
Figure 5.2-4. Babcock & Wilcox integrated control system organization. 5-30
Figure 5.3-1. Cold leg recirculation in through same-loop cold legs in a Combustion Engineering plant. 5-32
Figure 5.7-1. General method for driving a portion of a full system model to steady conditions. 5-39

TABLES

Table 2.3-1. Summary of the RELAP5-3D© thermal-hydraulic building blocks. 2-22
Table 2.3-2. Summary of RELAP5-3D© control variable building blocks. 2-23
Table 3.4-1. Volume-averaged values used in momentum flux for dividing flow with crossflow junction to face 4 of volume 1-03. 3-46
Table 3.4-2. Volume-averaged values used in momentum flux for dividing flow with normal junction to face 1 of volume 1-03. 3-47
Table 3.4-3. Volume-averaged values used in momentum flux for dividing flow with normal junction to face 2 of volume 1-03. 3-47
Table 4.6-1. Modes of pump operation. 4-34
Table 4.6-2. Homologous curve regime consistency requirements. 4-35
Table 4.7-1. Cards 1CCCG501 through 1CCCG599 and 1CCCG601 through 1CCCG699, Word 3, convection boundary type. 4-48
Table 4.10-1. Control variable types and their functions. 4-56
Table 5.5-1. Guidance for converting a single-loop model to a two-loop model. 5-34

EXECUTIVE SUMMARY

The RELAP5-3D© advanced-thermal hydraulic code has become a tool used throughout the world to analyze transients in light water reactor systems. RELAP5-3D© code users range from world-renowned thermal-hydraulic experts to college students. Thus, there is a great need for guidelines to use the code.

The RELAP5-3D© user's guidelines manual is a loose-leafed document and will be updated periodically. The reason for this is that user's guidelines are never complete. As more experience is gained using the code, additional guidelines will be defined and included.

The user's guidelines have been designed for both first-time users and experienced users. As such, the entire analysis process is outlined and described. Essentially, the model construction process consists of the following steps:

- The transient scenario should first be evaluated from the perspective of whether the code has the capability to analyze the expected phenomena.
- The information required to build the model must be collected. This information consists of system geometry specifications and system initial and boundary conditions.
- The information that describes the hardware as well as the hardware initial and boundary conditions must be "translated" to the form required by RELAP5-3D© .
- The nodalization resulting from the above process should be reviewed by a model review committee before performing an analysis. The committee will review the important phenomena that will occur during the transient and determine whether the model and planned analysis approach will be adequate to evaluate the transient behavior and meet the analysis objectives.
- The steady-state calculation is performed and analyzed. The analyst must ensure that the model's initial condition is representative of the real system's condition.
- The transient calculation is performed and analyzed. During this phase of the analysis process, the analyst must ensure that the code results are representative of the subject transient. Unphysical results caused by improper nodalization, code deficiencies, or user errors must be identified and eliminated. Thereafter, the analyst can use the results to meet the desired analysis objectives.
- Throughout the process, the analysis must be rigorously documented. The model should be documented in a workbook and independently checked, when feasible, by another analyst. The calculation should be outlined, the steps taken to ensure that the calculation is representative of the subject transient should be listed, and the analysis results should be recorded.

The above seven-step process should be used whether performing a code assessment calculation or a code application calculation [i.e., assessing the code by comparing the calculation to a data set or applying the code to predict the behavior of a thermal-hydraulic system (a commercial power plant for example)].

Most of the above steps are illustrated with a typical Westinghouse plant model. Questions concerning applications of the code to Combustion Engineering, Inc. and Babcock & Wilcox plants are answered in subsections specific to these plant types.

ACKNOWLEDGMENTS

The author of the user's guidelines manual is indebted to all the users that have provided information. The author is grateful to the many users at the Idaho National Engineering and Environmental Laboratory, both past and present, and especially the members of the International Code Assessment and Applications Program (ICAP), the Code Applications and Maintenance Program (CAMP), and the International RELAP5 Users Group (IRUG).

The decision concerning whether this document should include all the work done by past users has been difficult. Inevitably some people's work has not been included. In general, the author has decided whether to include a particular piece of work based on its application to RELAP5-3D© . Most past work has been done using earlier versions of RELAP5.

The author is very grateful to Don Fletcher, who co-authored earlier versions of the user's guidelines manual. The author is particularly grateful to Gene S. Rhee, David Bessette, and Louis M. Shotkin of the U. S. Nuclear Regulatory Commission for their support and suggestions. In addition, the author is indebted to Vic Ransom and his students at Purdue University for the review and critique. Finally, the author is also very grateful to Nancy Larson and Edna Johnsen as the RELAP5 Newsletter editors, to Clay Miller and Rich Riemke for their developmental support, to James Cozzuol and Chris Allison for their reviews, and to Mary Harris, Erma Jenkins, and Evelyn Onkes for their work on the illustrations and appendices.

ACKNOWLEDGMENTS FOR RELAP5-3D

Development of a complex computer code such as RELAP5-3D© is the result of team effort and requires the diverse talents of a large number of people. Special acknowledgment is given to those who pioneered in the development of the RELAP5 series of codes, in particular, V. H. Ransom, J. A. Trapp, and R. J. Wagner. A number of other people have made and continue to make significant contributions to the continuing development of the RELAP5-3D© code. Recognition and gratitude is given to past and current members of the RELAP5-3D© team:

P. D. Bayless	N. S. Larson	R. A. Riemke
V. T. Berta	M. A. Lintner	A. S-L. Shieh
K. E. Carlson	G. L. Mesina	R. R. Schultz
C. B. Davis	C. S. Miller	R. W. Shumway
J. E. Fisher	G. A. Mortensen	C. E. Slater
C. D. Fletcher	P. E. Murray	S. M. Sloan
E. C. Johnsen	C. E. Nielson	J. E. Tolli
G. W. Johnsen	R. B. Nielson	W. L. Weaver
H-H. Kuo	S. Paik	

The list of contributors is incomplete, as many others have made significant contributions in the past. Rather than attempt to list them all and risk unknowingly omitting some who have contributed, we acknowledge them as a group and express our appreciation for their contributions to the success of the RELAP5-3D© effort.

Finally, acknowledgment is made of all the code users who have been very helpful in stimulating timely correction of code deficiencies and suggesting improvements.

1 Introduction

The RELAP5-3D© code is the latest variant of the RELAP5 series of advanced thermal-hydraulic codes, the first of which was released in 1979.[1.0-1] Initially, this code was used principally by Idaho National Engineering Laboratory (INEL) analysts for understanding Loss-of-Fluid Test (LOFT) and Semiscale experimental behavior. Since then, the code has become widely accepted throughout the world for analyzing commercial and experimental light-water reactor (LWR) systems together with their related scaled systems.

Through evolution and use, the code has become more complex while the user base has appreciably increased. The number of problem types the code can handle has also increased. Consequently, the code has become more difficult to use and there is a broader range of analyst abilities. That is, some analysts are novice users with only elementary training in thermal-hydraulic phenomena, whereas other users are world-class thermal-hydraulic experts.

This document has been designed to guide all classes of RELAP5-3D© users to produce quality models and analyses concerning the thermal-hydraulic behavior of light-water systems that are consistent with the current knowledge concerning the code. Volume V is like the other volumes in that it is a "living document" that will be updated when (a) information is provided by the user community from code assessments and applications studies, (b) corrections are generated, and (c) user's guidelines for SCDAP/RELAP5 and ATHENA are assembled.

This volume has been organized to provide user guidelines in the order of increasing detail. Section 2 gives modeling techniques from an overall perspective and a very general outline of whether to use the code for a specific application. Section 3 gives advice concerning overall model construction including general code model options, and Section 4 gives specific guidelines applicable to each component model available in the code. As a result, the more advanced users will probably discover that their questions are addressed in the later sections of the report. Finally, Section 5 consists of examples showing how the code has been applied to analyzing pressurized water reactors (PWRs).

1.0.1 Reference

1.0-1. V. H. Ransom et al., *RELAP5/MOD0 Code Description: Volume 1, RELAP5 Code Development*, CDAP-TR-057, Idaho National Engineering Laboratory, May 1979.

2 Fundamental Practices

Problems concerning the behavior of single- and two-phase fluid systems are often too complex or unwieldy to use hand calculations. Consequently, a number of advanced thermal-hydraulic codes have been created (e.g., RELAP5-3D© , TRAC-PF1/MOD2, etc.), and are a part of the analyst's tool-chest. Once the potential code user is aware of the existence of such tools, the decision to use a particular code should hinge on the answers to the following questions:

- Does the code have the capability to handle the problem?
- What kind of equipment is needed to use the code? If the user must analyze the problem on a mainframe computer, is use of the code affordable?
- If the code does have the capability to analyze the problem and the necessary computing hardware is available, what is the best way to apply the code?

The purpose of Section 2 is to discuss the first and third bullets above. Hardware requirements are discussed in Volume II.

2.1 Capability of RELAP5-3D©

RELAP5-3D© analyzes the thermal-hydraulic behavior of light-water systems. It was originally designed to analyze complex thermal-hydraulic interactions that occur during either postulated large or small break loss-of-coolant accidents (LOCAs) in PWRs. However, as development continued, the code was expanded to include many of the transient scenarios that might occur in thermal-hydraulic systems. Thus, the code has been successfully used to analyze not only large-[2.1-1] and small-break LOCAs,[2.1-2,2.1-3] but also operational transients in PWRs[2.1-4,2.1-5,2.1-6] and various transients in experimental and production reactors and reactor simulators.[2.1-7,2.1-8,2.1-9] The code has also been used (to a lesser extent) for boiling-water reactor (BWR) system analysis.[2.1-10,2.1-11,2.1-12]

The RELAP5-3D© equation set gives a two-fluid system simulation using a nonequilibrium, nonhomogeneous, six-equation representation. A one-dimensional and a multi-dimensional hydrodynamic model are available. The presence of boron and noncondensable gases is also simulated using separate equations for each. Constitutive models represent the interphase drag, the various flow regimes in vertical and horizontal flow, wall friction, and interphase mass transfer. The code has a point kinetics model and a multi-dimensional nodal neutron kinetics model to simulate neutronics. The field equations are coupled to the point kinetics and multi-dimensional kinetics models, thus permitting simulation of the feedback between the thermal-hydraulics and the neutronics. The code also has the capability to simulate the presence of slabs of material adjacent to the fluid. A one-dimensional or two-dimensional heat conduction model is available; the two-dimensional model is used for reflood. Thus, energy transfer to and from stationary slabs of material can be simulated. Control systems and component models permit simulations

of equipment controllers, balance-of-plant equipment (e.g., turbines, pumps, and condensers), and lumped-node representations of various processes (e.g., heat transfer from one volume to another).

The RELAP5-3D© code has implied capabilities because (a) the equation sets formulated for the RELAP5-3D© code were designed to investigate light-water system behavior at both nonhomogeneous and nonequilibrium conditions and virtually any pressure, (b) the point kinetics model and multi-dimensional nodal kinetics model allows the study of various anticipated transients without scram (ATWS) and the thermal-hydraulic to neutronics feedback effects, and (c) the code's control systems capabilities and balance-of-plant models allow a coarse simulation of virtually any component of a plant using a "lumped node" approach. The user may be tempted to assume that the code can be used with impunity to study any LWR transient. This is not the case, however. The restrictions and cautions that the user must exercise when confronted with a problem that requires analysis are discussed below.

2.1.1 Assessing Use of the Code

RELAP5-3D© has been used by analysts to evaluate the thermal-hydraulic behavior of many light-water systems. Consequently, several reference documents exist for the potential user (see Appendix A for abstracts of these documents). This body of literature can aid in determining whether a problem can be evaluated by the code. If the user is faced with a unique application or a problem that previously was determined to be beyond the capability of the code, the logic path outlined in **Figure 2.1-1** should be used as a guide.

A subset of problems that falls within the analysis in **Figure 2.1-1** deserves special mention. RELAP5-3D© and earlier versions of the code have been used for structural analysis (including water and steam hammer) in the past. Since such problems must be treated with great care, the next subsection is devoted to them alone.

2.1.2 Structural Analysis Using RELAP5-3D©

The RELAP5-3D© code was developed principally to calculate fluid behavioral characteristics during operational and LOCA transients. Of course, the results describing fluid behavioral characteristics provide the basis for also calculating structural loading because the transient hydrodynamic pressures are key results. Furthermore, RELAP5-3D© can calculate acoustic wave propagation (pressure signal transmission) in pipelines and various system components. However, it is important to understand and carefully evaluate RELAP5-3D© results that are used in such a way.

First, the potential user should know that structural loading analysis was not part of the charter that led to creation of the code. Therefore, the RELAP5-3D© numerical techniques were not optimized for such an application. Second, rigorous assessment of the code's results for structural loading has never been undertaken. Consequently, there are no official benchmark calculations that verify the code's capability for performing such calculations or give a suggested approach that is known to work. Third, the RELAP5-

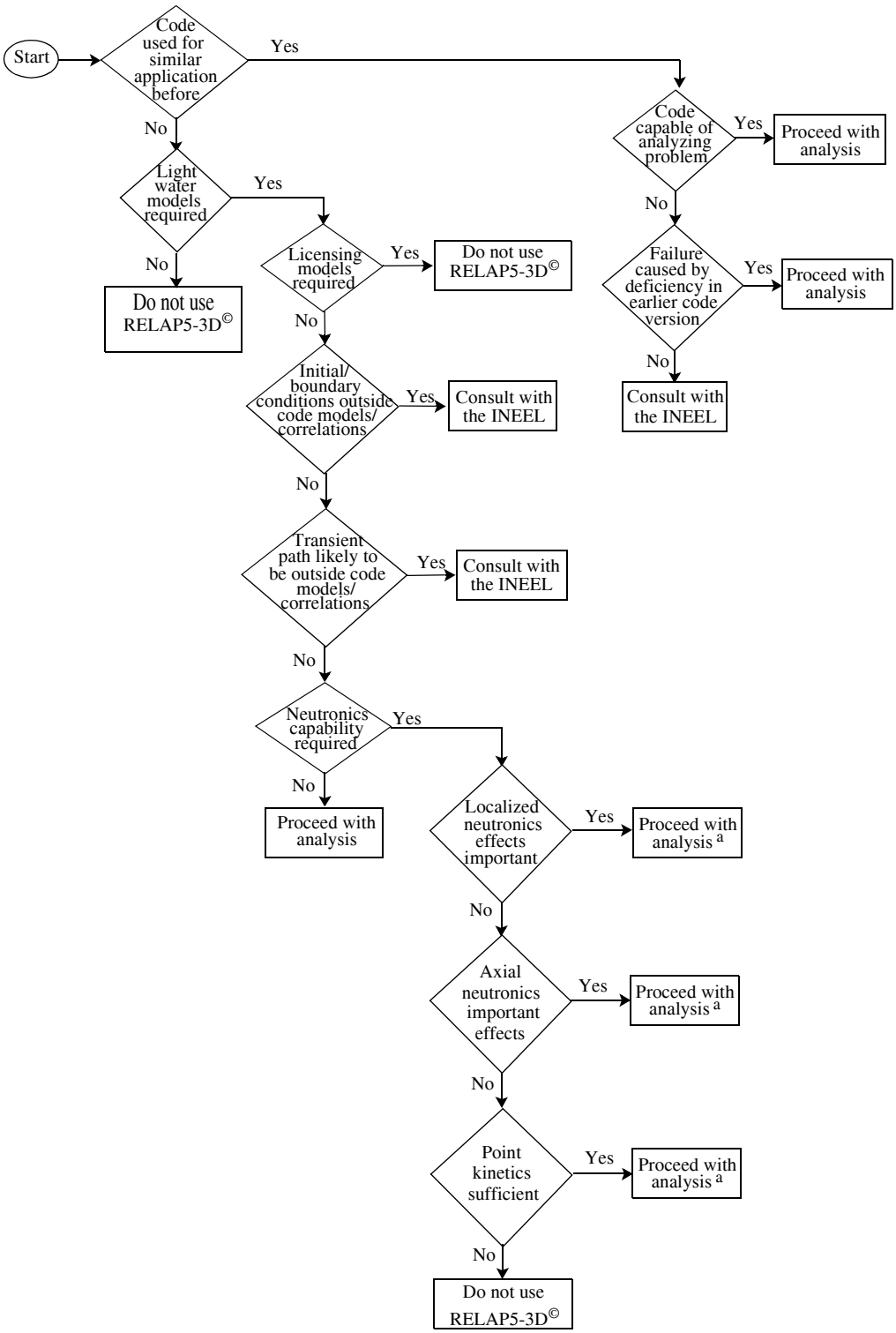

a. If the user intends to conduct a structural, water hammer, or steam analysis using RELAP5-3D© consult Section 2.1.2.1 or 2.1.2.2.

Figure 2.1-1 RELAP5-3D© use analysis.

3D© solution scheme is designed to converge based on the material Courant limit (i.e., the numerical algorithms limit the solution time-step size based on the mass flow transit time through each component cell). Because of this, pressure wave propagation will violate the sonic Courant limit unless special care is taken by the user. The following two sections offer advice concerning structural analysis and acoustic wave propagation.

2.1.2.1 Structural Analysis. A program has been written that computes fluid-induced forces using the RELAP5-3D© hydrodynamic output. The code is called R5FORCE/MOD3s[2.1-13] and is based on a one-dimensional representation of the momentum equation that

- Neglects fluid velocity and shear force effects that are external to the flow path.
- Assumes a one-dimensional uniform cross-sectional area control volume.
- Approximates the normal stress by the quasi-steady change in the momentum.
- Represents uniformly the fluid velocity, density, and pressure over the local cross-sectional area and the shear over the local control-volume surface area.

However, as Watkins has stated in the R5FORCE/MOD3s manual: "It must be understood that verification studies with R5FORCE/MOD3s program have been very limited and no comparison with experimental data have yet been made."[2.1-13]

2.1.2.2 Water and Steam Hammer Analysis. Using the code for water and steam hammer analyses is sometimes a controversial topic. Analyst's opinions range from not using the code to using the code with qualifications. At the heart of the various differences in opinion are the finite differencing scheme used in the code and the standard practices exercised by most users. The code differencing scheme is the upwind or donor-cell scheme. The standard practices exercised by most users are based on their experience with the code in solving thermal-hydraulic phenomenological problems related to defining system mass distribution, core heatup, etc.

Fundamentally, researchers investigating the behavior of the upwind or donor-cell differencing schemes have shown that for the nodalization schemes used by most thermal-hydraulic analysts in RELAP5-3D© type problems, an acoustic wave is rapidly attenuated.[2.1-14,2.1-15] Thus, if a user attempts to use the code for water or steam hammer analysis, very close attention must be paid to the cell size and time step. Two factors must be considered very carefully for such analyses: (a) the Courant limit with regard to the acoustic wave must be manually tracked and (b) the cell size should be decreased so that there are a number of cells over the region of the pressure wave that has a high rate of change.

The acoustic wave Courant limit is the time required for a wave traveling at the sonic velocity to pass through any given model cell. Since the sonic velocity can be quite high, the time step usually has to be reduced to a rather small number. Also, if the pressure wave is expected to have a very rapid rate of increase, then the cell nodalization scheme must be implemented to give a small length dimension.

Working with these restrictions, the ratio of the model cell length to the solution time step (i.e., $\frac{\Delta x}{\Delta t}$) will be a large number for most water or steam hammer applications. An informal study done by Watkins[a] in 1982 using RELAP5/MOD1 showed that $\frac{\Delta x}{\Delta t}$ ratios of 6,100 m/s gave reasonable results for a 0.34-m diameter pipe filled with 75 K subcooled water at 15.5 MPa. However, at $\frac{\Delta x}{\Delta t}$ ratios of 61,000 m/s the solution exhibited "ringing," and at $\frac{\Delta x}{\Delta t}$ ratios less than 610 m/s the wave was rapidly attenuated and distorted. When confronted with the need to do a water hammer analysis on the Braidwood Unit 1 Nuclear Power Plant residual heat removal piping, another user concluded that the long pipe lengths combined with a sonic velocity of approximately 1,500 m/s created a problem that the RELAP5-3D© code was not well-suited to handle.[b] Therefore, people planning to use RELAP5-3D© for water or steam hammer analyses are cautioned to carefully examine the application and compare the code's prediction to their expected result. If the user has any doubts concerning the ability of the code to give an undistorted result, then a code designed specifically for acoustic wave propagation analysis is recommended.

2.1.3 References

2.1-1. I. Brittain and S. N. Aksan, *OECD-LOFT Large Break LOCA Experiments: Phenomenology and Computer Code Analyses*, Paul Scherrer Institute, PSI-Bericht Nr. 72, AEEW-TRS-1003, August 1990.

2.1-2. C. D. Fletcher and C. M. Kullberg, *Break Spectrum Analysis for Small Break Loss-of-Coolant Accidents in a RESAR-3S Plant*, NUREG/CR-4384, EGG-2416, Idaho National Engineering Laboratory, September 1985.

2.1-3. C. D. Fletcher, C. B. Davis, and D. M. Ogden, *Thermal-Hydraulic Analyses of Overcooling Sequences for the H. B. Robinson Unit 2 Pressurized Thermal Shock Study*, NUREG/CR-3935, EGG-2335, May 1985.

2.1-4. E. J. Stubbe, *Assessment Study of RELAP5/MOD2 Cycle 36.01 Based on the DOEL-2 Steam Generator Tube Rupture Incident of June 1979*, NUREG/IA-0008, October 1976.

2.1-5. R. R. Schultz, Y. Kukita, and K. Tasaka, *Simulation of a TMI-2 Type Scenario at the ROSA-IV Program's Large Scale Test Facility: A First Look*, JAERI-M84-176, September 1984.

2.1-6. B. Chung, *Assessment of RELAP5/MOD2 Code Using Loss of Offsite Power Transient Data of Korea Nuclear Unit 1 Plant*, NUREG/IA-00030, April 1990.

---

a. Personal communication, John C. Watkins to R. R. Schultz, January 1991.

b. Personal communication, V. T. Berta to R. R. Schultz, January 1991.

2.1-7. O. Rosdahl and D. Caraher, *Assessment of RELAP5/MOD2 Against Critical Flow Data from Marviken Tests JIT 11 and CFT 21*, NUREG/IA-0007, September 1986.

2.1-8. M. G. Croxford and P. Hall, *Analysis of the THETIS Boildown Experiments Using RELAP5/MOD2*, NUREG/IA-00014, July 1989.

2.1-9. M. M. Megahed, *RELAP5/MOD2 Assessment Simulation of Semiscale MOD-2C Test S-NH-3*, NUREG/CR-4799, EGG-2519, Idaho National Engineering Laboratory, October 1987.

2.1-10. R. J. Dallman et al., *Severe Accident Sequence Analysis Program-- Anticipated Transient Without Scram Simulations for Browns Ferry Nuclear Plant Unit 1*, NUREG/CR-4165, EGG-2379, Idaho National Engineering Laboratory, May 1987.

2.1-11. R. R. Schultz and S. R. Wagoner, *The Station Blackout Transient at the Browns Ferry Unit One Plant: A Severe Accident Sequence Analysis*, EGG-NTAP-6002, Idaho National Engineering Laboratory, September 1982.

2.1-12. J. Eriksson, *Assessment of RELAP5/MOD2, Cycle 36.04 Against FIX-II Guillotine Break Experiment No. 5061*, NUREG/IA-00016, July 1989.

2.1-13. J. C. Watkins, *R5FORCE/MOD3s: A Program to Compute Fluid Induced Forces Using Hydrodynamic Output from the RELAP5/MOD3 Code*, EGG-EAST-9232, Idaho National Engineering Laboratory, September 1990.

2.1-14. J. H. Stuhmiller and R. E. Ferguson, *Comparisons of Numerical Methods for Fluid Flows*, EPRI NP-1236, November 1979, pp. 17-21.

2.1-15. E. S. Oran and J. P. Boris, *Numerical Simulation of Reactive Flow*, New York: Elsevier, 1987, pp. 111-114.

2.2 Description of Thermal-Hydraulic Analysis

Once the analyst has decided to use RELAP5-3D© to analyze a problem, obtaining the problem solution consists of the following stages:

- Gathering and organizing information that defines the initial and boundary conditions. All the available information must be divided into two categories: pertinent and nonpertinent. Missing information must then be obtained from sources such as vendors, utilities, or consultants to provide the complete spectrum of needs for the code. A problem description and solution notebook is started to document the problem solution and chronology of the work.

- Defining and nodalizing the problem. The code input nodalization should be defined so the most complete information set concerning the questions that motivated the study will be available. The solution approach, assumptions, and final model nodalization are

recorded in the problem description and solution notebook. This stage also includes the formation of a design review committee to conduct reviews of the model nodalization and the analysis approach.

- Inputting the problem. The initial and boundary conditions are placed in a computer file. The model is then initialized to secure the desired starting point for the problem investigation and the proper boundary conditions. The experience is recorded in the problem description and solution notebook.

- Quality-assuring the model. An independent review is performed of the input and the problem description and solution notebook. This review verifies that information sources are documented, derived quantities accurately calculated, and modeling assumptions are valid.

- Running the code and analyzing the problem. The code is run until completed, and the solution is analyzed. All analysis procedures, findings, and observations are recorded in the problem description and solution notebook.

Each of the five phases described above is described in more detail in the following four sections.

2.2.1 Gathering and Organizing Information

Fundamentally, the RELAP5-3D© input requirements can be divided into four distinct areas: hydrodynamics, heat structures, control systems, and neutronics. The overall inputs required are listed below:

- Hydrodynamics
  - all flow areas
  - all flow lengths
  - vertical orientations
  - geometric detail sufficient to calculate hydraulic diameters
  - material roughness at fluid-wall interfaces
  - information sufficient to calculate flow losses (e.g., bend geometries, area expansion geometry, valve geometries, rated or test valve flow rates, plant startup test data)
  - initial plant conditions
  - pump characteristics

- Heat structures
  - material thicknesses
  - material masses
  - pipe lengths
  - inner and outer diameters
  - material types
  - material properties as a function of temperatures (e.g., thermal conductivity, density, and specific heats)
  - heater power (if the mass has source terms)
  - locations of heat sources
  - initial temperature distributions
- Control systems
  - control system block diagrams
  - identification of the relationship between various control systems and the hydrodynamic and/or heat structures that are controlled
  - controller characteristics
  - filter characteristics
  - setpoints
  - gains
  - saturation limits
  - lags
  - controlled equipment characteristics
  - valve stroke rates
  - maximum/minimum pump speeds

- maximum/minimum cycling rates

- Neutronics
  - initial reactivity
  - exposure data
  - delayed neutron fraction data
  - fission product yield fraction
  - actinide yield fractions
  - reactivity characteristics.

This information is available in various system specific documents. The following items are examples:

- Final safety analysis reports
- Prints of loop piping in
  - reactor vessel
  - steam generator
  - steam lines
  - feed train
  - pressurizer
  - reactor coolant pumps
  - accumulators
  - safety injection lines
- Piping and instrumentation diagrams
- Precautions, limitations, and specifications documents
- Operating procedures

- Fuel and reactor kinetics information
- Pump characteristics
  - reactor coolant pumps
  - emergency core cooling pumps
  - charging pumps
  - main feedwater pumps
  - auxiliary feedwater pumps
- Valve information
- Plant startup test data.

Each of the information sources should be listed in the problem description and solution notebook. As information is taken from each source and used to calculate RELAP5-3D© -specific input, the information source can be specified in each instance.

2.2.2 Defining and Nodalizing the Problem

Following receipt of all the pertinent information regarding the system to be modeled, the next step consists of isolating the important components of the system that must be modelled using the code. In effect, the user must draw a boundary around the system that requires simulation. The boundary defines the extent of the model and the model is composed of volumes that are called “control volumes.” The “control volumes” are defined by the user in a fashion that best allows analysis of the problem. The process of creating the “control volumes” is called “nodalizing the model.” During the process of defining and nodalizing the problem, the user must carefully document each step. When the documentation process is completed, the model should be checked by an independent checker.

2.2.2.1 Definition of the Model Boundary. Usually, definition of the model boundary is straightforward. The exact location of the model boundary is dependent on the type of problem being analyzed. That is, if the user is only interested in core heatup characteristics for a particular PWR and the core inlet and outlet conditions (together with the core power) are known as a function of time, then the model boundary could be placed to only include the core together with the core inlet and exit flow paths. On the other hand, if the entire primary system behavior for the same PWR requires study, then the model boundary would probably encompass the entire primary system, together with the portion of the secondary system that interacts with the primary. The extent to which the secondary system is simulated depends on the problem. For example, if the user is analyzing an LOCA that results in closure of the secondary system's main steam line valves early in the transient, then only that portion of the secondary system from the steam generators up to and including the main steam line valves need to be modeled. On the other

hand, if the user is analyzing a plant event that involves interactions between the various components of the balance-of-plant equipment (i.e., the turbines, the condensers, feed pumps, booster pumps, etc.) then the crucial balance-of-plant equipment components would also have to be included in the model boundary.

An example of a one-loop PWR model, with the model boundaries defined to include the entire primary system and the secondary system up to the turbine stop valve (the turbine is crudely simulated using a boundary condition), is shown in **Figure 2.2-1**, **Figure 2.2-2**, and **Figure 2.2-3**. Such a model was designed to analyze plant operational transients that did not include pipe breaks and for which balance-of-plant components exerted little or no influence on the course of the transient.

2.2.2.2 Model Nodalization. Following definition of the model boundary, the next step is to nodalize the model. That is, each portion of the model must be divided into discrete components. As stated in Volume II of this manual: "RELAP5-3D© is designed for use in analyzing system component interactions; it offers both non-detailed (one-dimensional) and detailed (multi-dimensional) simulations of fluid flow within components. As such, it contains the ability to model multi-dimensional effects, either for fluid flow, heat transfer, or reactor kinetics.'' The discussion in this section is for one-dimensional flow (multi-dimensional flow is discussed in Section 4). The one-dimensional model is divided into control volumes that are essentially stream-tubes having inlet and outlet junctions. The junctions connect the various model control volumes together. The code calculates the average fluid properties at the center of the control volumes throughout the model and the fluid vector properties at the junctions.

The simplest subdivision of a model into a set of control volumes or nodes is obtained by dividing the entire model into approximately equally-sized nodes. Appropriate node size is governed by several factors: applicability of constitutive models, run time, and spatial convergence. The constitutive models (closure relations) that are used for the interphase/wall drag, heat transfer, and mass transfer were developed from experiments in terms of average or macroscale parameters. Furthermore, the two-fluid model was derived by forming a volume and time average over the details of the flow process. When these models are applied to spatial increments which are much smaller than the problem characteristic dimension, the models may not be applicable. For example in slug flow in a pipe where the flow is axially subdivided into intervals less than one pipe diameter, the flow can no longer be classified as slug flow in each interval. The formulation only apply, at least from a physical point of view, to sufficiently large spatial volumes. See Ransom and Mousseau for more details[2.2-1,2.2-2]. Thus, it is recommended that the ratio of the node length to diameter be unity or greater. In practice, this ratio is much larger than one, but this "rule" provides a lower limit. Generally, nodes should be defined as large as possible without compromising spatial convergence of the results. It should be noted that node size directly influences run time; the smaller the node, the smaller the maximum time step size to remain numerically stable. (The material Courant limit dictates that the time step not exceed the node length divided by the maximum fluid velocity.) Determining spatial convergence in the numerical results is a less straightforward process. The modeling example that follows provides some guidance. However, suitable nodalization is problem dependent, and the user must exercise some judgment as to where in the model nodalization sensitivity studies are warranted.

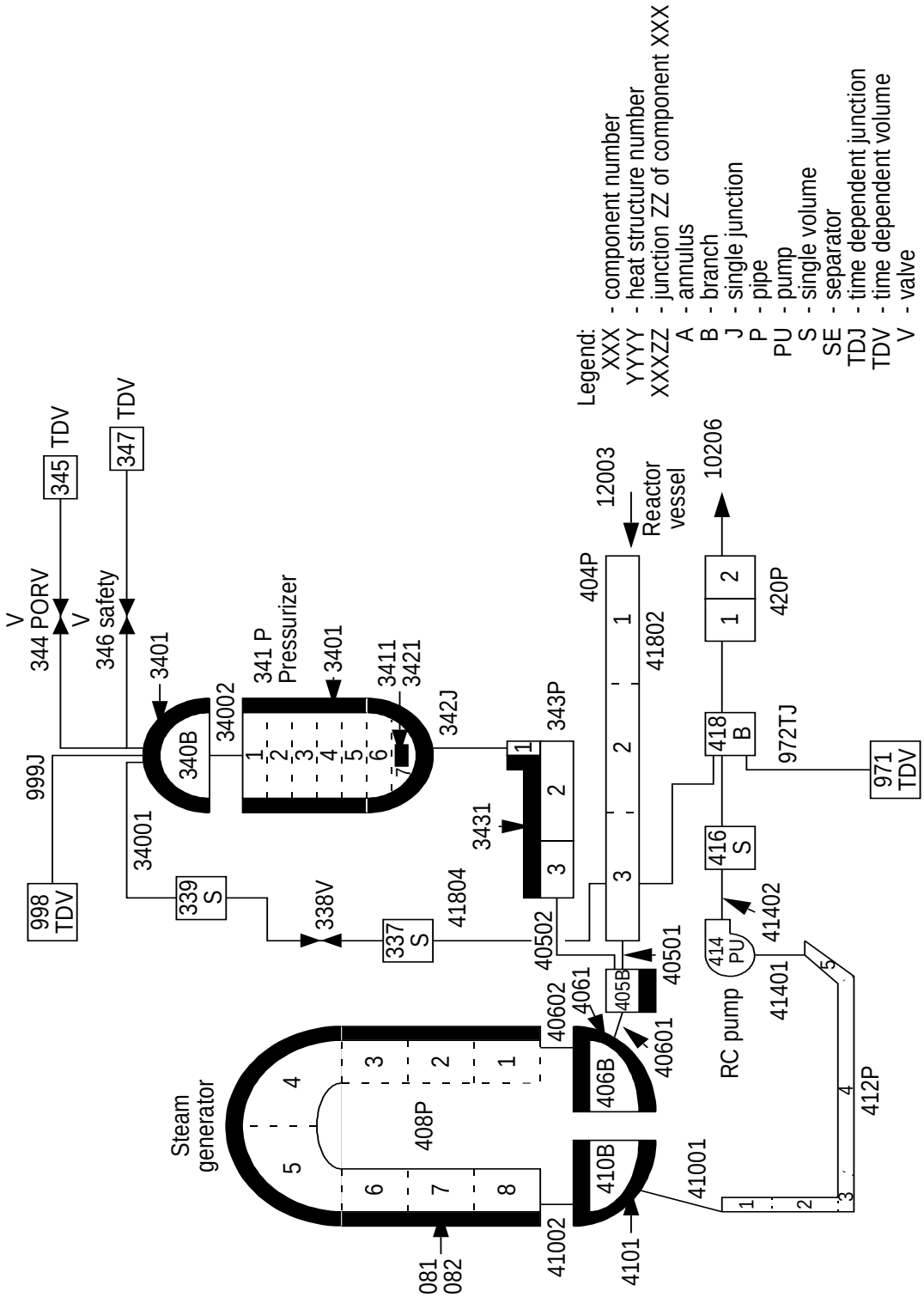

Figure 2.2-1 Nodalization of primary loop.

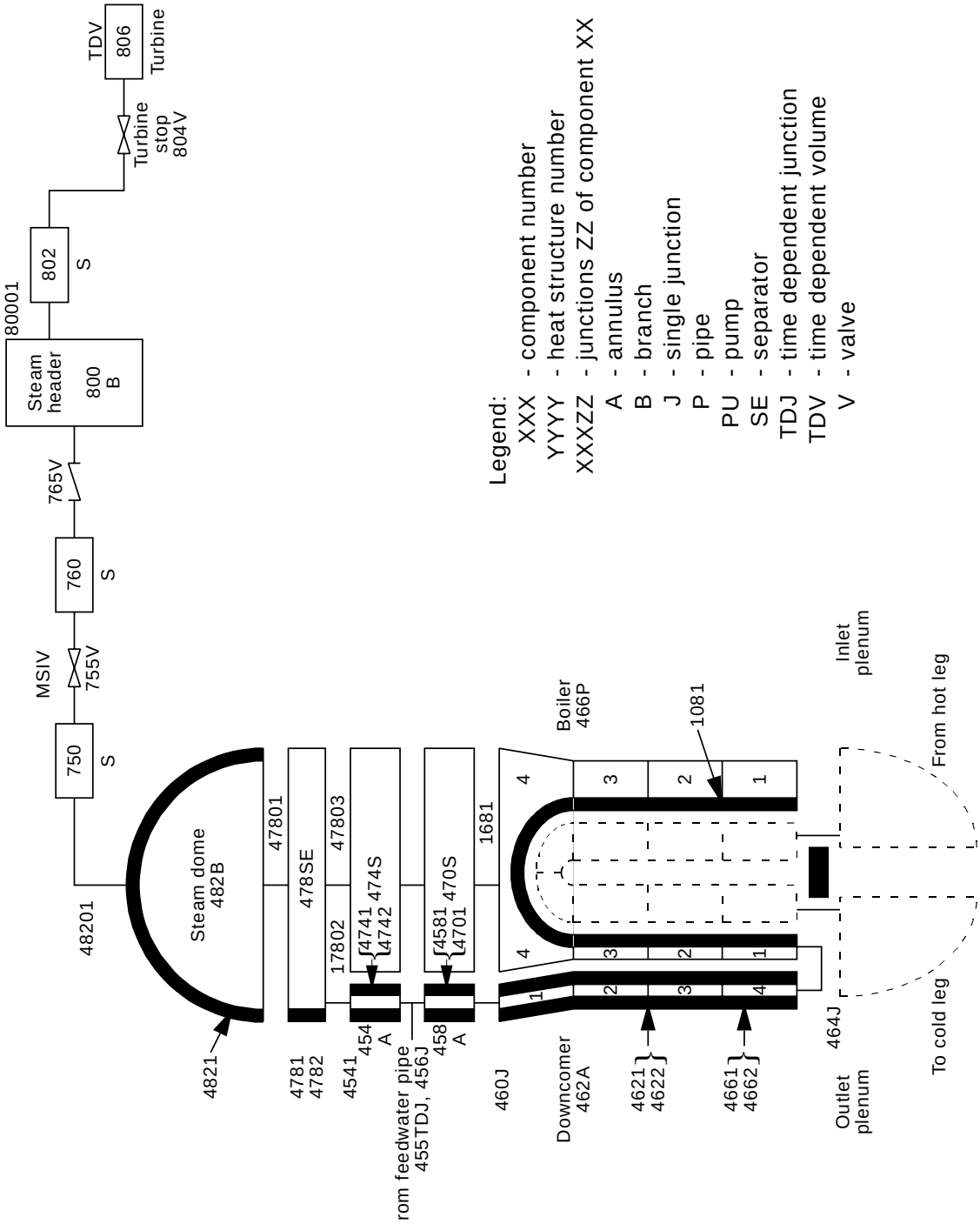

Figure 2.2-2 Nodalization of steam generator and secondary system.

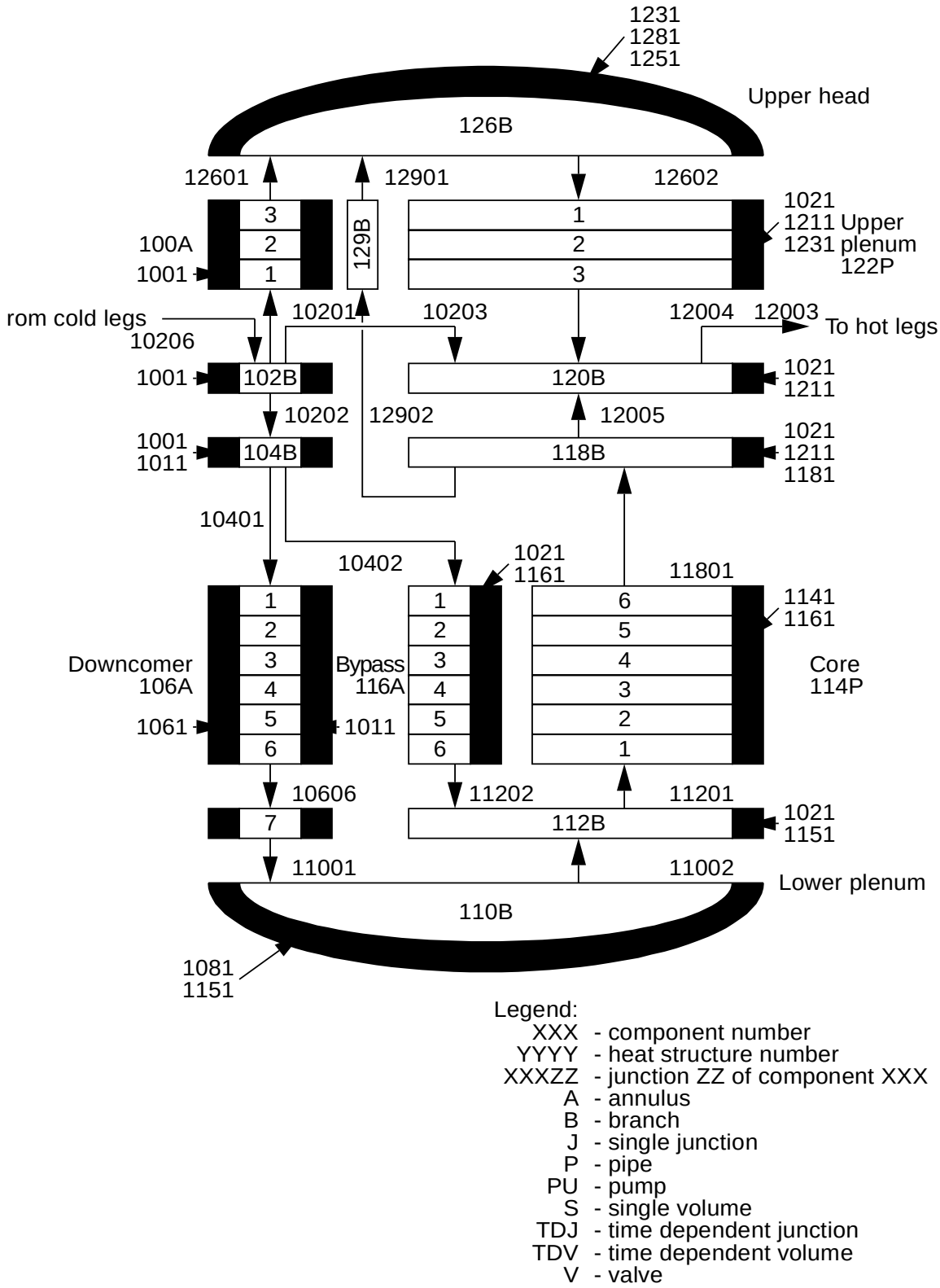

Figure 2.2-3 Nodalization of reactor vessel.

It should be recognized immediately by the user that unless the system is quite simple, the model cannot be subdivided into equally-sized nodes. Practical hardware configurations are often complex and may contain multiple flow paths that change both area and orientation in the direction of fluid flow.[a] Also, in some portions of a system, single-phase fluid may move in a quiescent fashion while in other portions of the system the fluid may be highly agitated and exist in both the liquid and vapor/gas phases. The user will usually be more interested in the fluid behavior in one portion of the control volume than in another. Consequently, finer nodalization may be used to study the fluid behavior in specific locations of the model.

The model shown in **Figure 2.2-1**, **Figure 2.2-2**, and **Figure 2.2-3** has been subdivided into a number of nodes. For example, the pressurizer was divided into eight nodes (**Figure 2.2-1**). Seven of the nodes are contained within a RELAP5-3D© PIPE component (component 341) and one node is simulated using a RELAP5-3D© BRANCH component (component 340).[b] It should be noted that the calculations required to specify the dimensions, properties, and fluid conditions within each node must be documented and kept within the problem description and solution notebook. An example of such a calculation for a portion of the pressurizer is shown in **Figure 2.2-4**

Modeling most systems requires not only simulating the fluid stream-tubes but also stationary mass (heat slabs) that have the capability to store heat or might even contain heat sources. The code has the capability to simulate one-dimensional heat transfer from heat slabs to the fluid. Generally, the heat slabs are nodalized to have a length-dimension that is no longer than their adjacent fluid control volumes. Sometimes, depending on the specific application, the heat slabs have length-dimensions that are less than their adjacent control volume. Examples of heat slabs are shown in **Figure 2.2-1**, **Figure 2.2-2**, and **Figure 2.2-3**. Thus, the heat slab modeling the pressurizer dome material adjacent to control volume 340 is number 3401 in **Figure 2.2-1**. The heat slabs simulating the core barrel and the exterior wall of the reactor vessel in the downcomer region (control volume 106 in **Figure 2.2-3**) are 1011 and 1061, respectively.

As the analyst plans and constructs the model, a design review committee should be formed. The purpose of the committee is to not only review the planned analysis approach, but also to suggest model improvements and additional areas of investigation. The committee should be composed of individuals that are experienced in the area of investigation. Of special importance is the model nodalization. The model should be nodalized based on the results of past nodalization studies and on the particular requirements of the analysis.

---

a. The user should make every effort to minimize the flow paths that are included in the model. As an example, tiny flow paths that may physically be present to cool hardware but are inconsequential to the overall system behavior should not be included. Inclusion of such flow paths will slow the problem run time and often give inaccurate results.

b. The RELAP5-3D© components are discussed in detail in Section 4.

CALCULATION WORK SHEET

Subject: Pressurizer Nodalization Date: 4/83
Prepared by: J. F. Steiner Checked: K. C. Wagner Work Request:

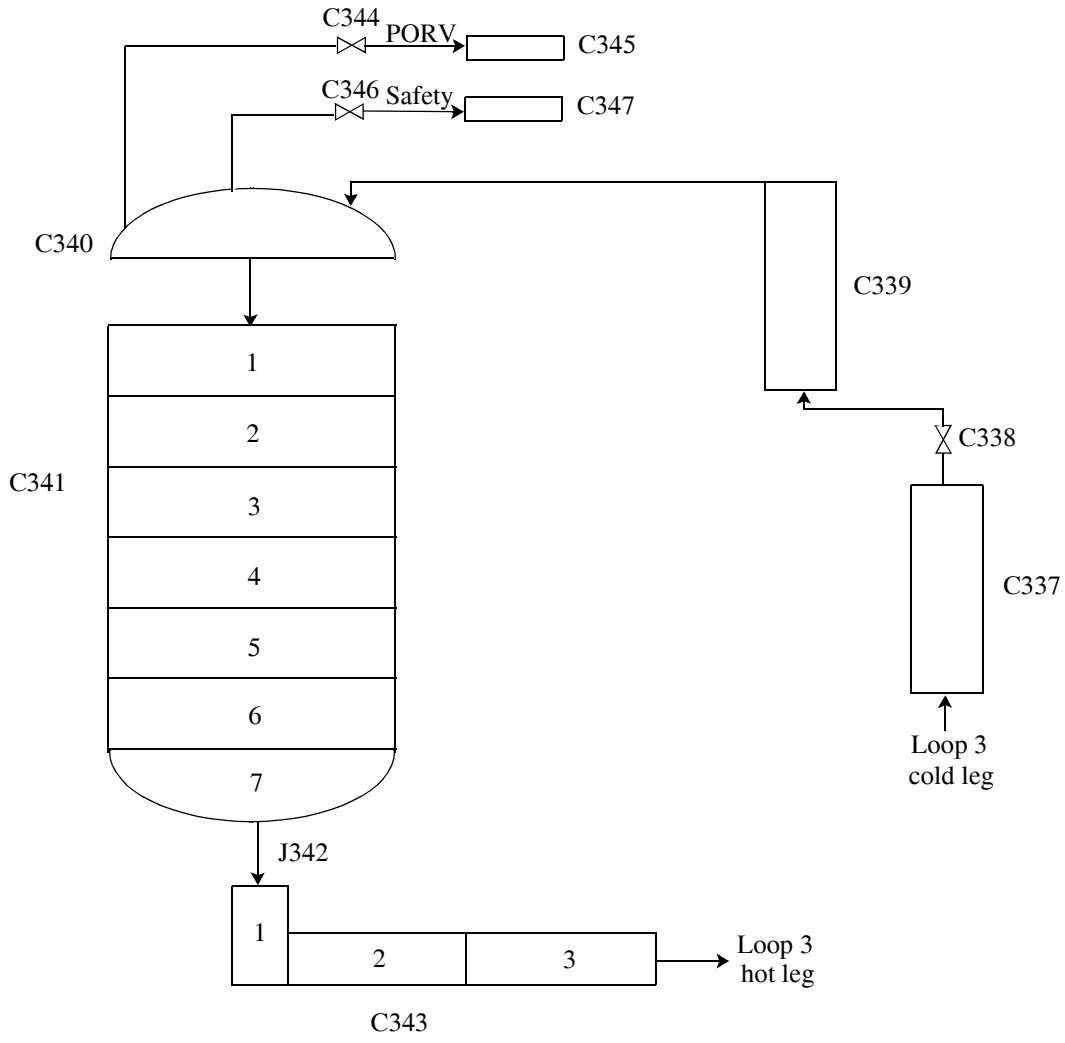

Figure 2.2-4 Calculation worksheet for pressurizer nodalization.

CALCULATION WORK SHEET

Subject: C340 Date: 4/83

Prepared by: J. F. Steiner Checked: K. C. Wagner Work request:

Component 340 (Branch)

Region Represented:

Hemispherical upper head of pressurizer

Junctions:

34001 pressurizer spray line

34002 connection to lower part of pressurizer

Inner radius = 42" (P 5.4.6-2 FSAR)

$$V_{340} = \frac{1}{2}\left\{\frac{4}{3}\pi\left(\frac{42}{12}\text{ft}\right)^3\right\} = 89.7972\ \text{ft}^3$$

L_{344} = 42" = 3.5 ft

$\text{JUN AREA}^{C}_{34001}$ = area of 4 in. SCH 160 PIPE (P44 S.D.-1)

= .0645 ft^2 (P 3-17 Crane)

$$\text{JUN AREA}_{34002} = \pi\left(\frac{42}{12}\text{ft}\right)^2 = 38.4845\ \text{ft}^2$$

SPRAY NOZZLE LOSS COEFFICIENT:

SPRAY NOZZLE ΔP = 15 psi at 600 gpm and 70° F (P41 S.D.-1)

$$K_{34001} = \frac{2(A_{34001})^2 \Delta P \rho}{\dot{m}^2}$$

At 70° F, 2250 psia: $\rho = 62.74\ \frac{\text{lb}_m}{\text{ft}^3}$

A_{34001} = .0645 ft^2 (P2)

$$K_{34001} = \frac{2(0.0645\ \text{ft}^2)^2\ 15\frac{\text{lb}_f}{\text{in}^2}\ 62.74\frac{\text{lb}_m}{\text{ft}^3}\ 32.2\ \text{lb}_m\frac{\text{ft}}{\text{s}^2}}{\left(600\frac{\text{gal}}{\text{min}}\frac{134\text{ft}^3}{\text{gal}}\frac{62.74\text{lb}_m}{\text{ft}^3}\frac{\text{min}}{60\ \text{s}}\right)^2\ \frac{\text{lb}_f}{\text{ft}^2}\frac{144\ \text{in}^2}{\text{ft}^2}} = 5.14$$

Figure 2.2-4 Calculation worksheet for pressurizer nodalization. (Continued)

Upon completion of the nodalization process, including the documentation, the user should have an independent checker review the model to verify that all the numbers and assumptions are correct. The checking phase is quite important, particularly if the model is a simulation of a commercial plant and the planned calculations are intended as input for licensing or policy-making decisions. Consequently, the checker is chartered to independently verify every single number that was input to the model. After completing the checkoff process, the checker should be asked to sign each worksheet (**Figure 2.2-4**) to indicate the worksheets have been reviewed and all problems have been resolved.

2.2.3 Obtaining the Boundary and Initial Conditions

Following the nodalization phase, the model is fully defined (as shown in **Figure 2.2-1**, **Figure 2.2-2**, and **Figure 2.2-3**). All dimensions are known, the various model flow paths are defined and simulate comparable flow paths in the physical system, the system metal mass is simulated, the logic that defines valve openings and closures, pump behavior, etc. is known. The next steps consist of inputting the model to the computer, checking the input for errors and inconsistencies, and obtaining a steady-state system balance.

2.2.3.1 Installing the Input. The RELAP5-3D© input is defined in Volume II, Appendix A. The specific structure and user guidelines are described in Section 3 of this volume.

Although it is a straightforward task to copy the various inputs from the documentation (**Figure 2.2-4**) into a computer file, transcription errors are among the most common. Error messages are displayed if some dimensions are not compatible; however, the user should not depend solely on the code's error messages because many input items are not checked by the code's internal checking algorithms. Worthy of special mention is the code's ability to detect whether model loop elevations are “closed.” For example, considering the model shown in **Figure 2.2-1** and **Figure 2.2-3**, a loop is formed by components 404, 405, 406, 408, 410, 412, 414, 416, 418, 420, 102, 104, 106, 110, 112, 114, 118, and 120. If the sum of the elevation changes within these components is not zero, then an artificial pump would be inadvertently present in the system model with a head equal to the hydrostatic pressure mismatch caused by the loop elevations. The code initialization logic is programmed to check for such mismatches.

2.2.3.2 System Steady-State. The system steady-state calculation is of particular importance in preparing for the transient calculation. The model steady-state condition is adjusted to match the physical system's initial condition.

The code contains a “steady-state” option to assist the user in reaching the correct initial conditions. Since the steady-state condition represents the initial fluid conditions and the metal mass initial conditions, the “steady-state” option enables the user to quickly reach steady-state thermally and hydraulically by reducing the specific heats of the metal masses to a low value. Thus, the model quickly converges to a condition representative of fluid conditions either input by the user or consistent with the user-input controllers. If reactor kinetics are also included in the model, the neutronics are often manually disabled until the system hydraulics have reached an unchanging steady-state condition to prevent formation of an unstable hydraulic-neutronics feedback system.

It is important that the user allows the model to run for a sufficient length of time before concluding that a steady-state condition has been reached. The user should ensure that a fluid particle moving from one part of the system can make a number of complete circuits back to its point of origin. Once a steady-state condition has been reached, the fluid conditions should be virtually unchanging with time. Such a condition is shown in **Figure 2.2-5** for the steam generator steam and feedwater mass flow rates as calculated for the model shown in **Figure 2.2-2**. Following an initial mismatch between the two flow rates, after 60 seconds the steam flow out exactly matches the feed flow in, and the two flows are steady.

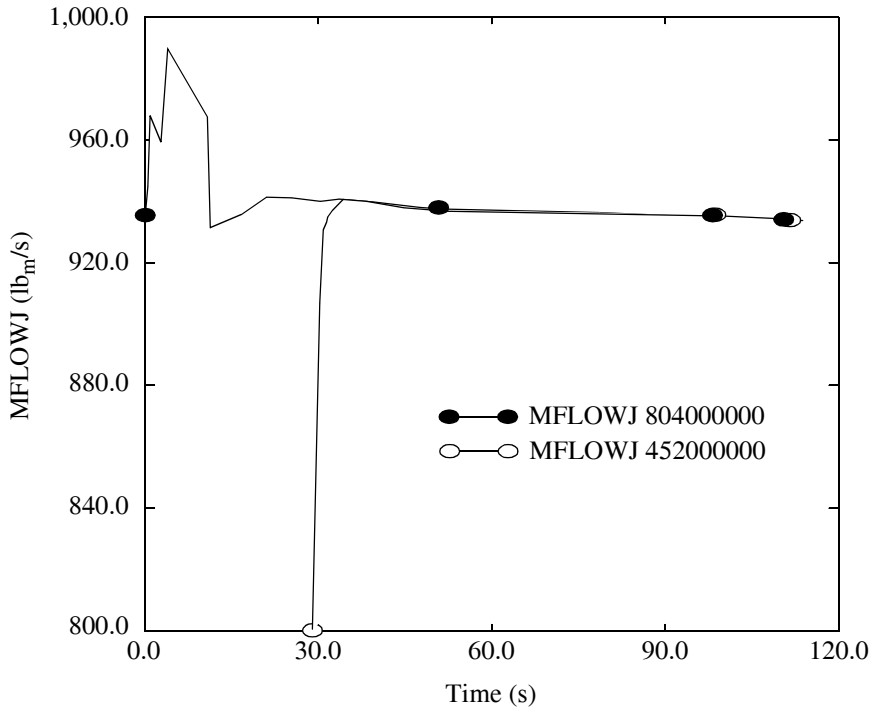

Figure 2.2-5 Workshop problem steady-state with controllers (steam and feedwater mass flow rates).

As for all other phases of the model-building process, each step and model adjustment should be documented in the problem description and solution notebook.

2.2.4 Running and Analyzing the Problem

The final phase of the solution process consists of running the problem on the computer and analyzing the results. This phase can be quite lengthy if the transient is complex.

2.2.4.1 Running the Problem. Running the problem on the computer is often thought by the novice user to be a trivial process. However, a number of difficulties may arise that may seem insurmountable at first glance. Two of the most common difficulties are

- Unexplained failures--Sometimes the code will fail and give a failure message that is not easily understood. For example, the code may give results showing unrealistic pressures or temperatures in one of the model nodes. The failure message would indicate that the code "was unable to converge." Such failures can sometimes be circumvented by reducing the maximum time step by a factor of two or more several time steps before the failure occurred and then resubmitting the job.

- Unexpected convergent results[a]--Often the user may be required to analyze a transient that is a variation of an analysis done by other users. If this is true and the new analysis results are unexpectedly different, the user should carefully reexamine the input boundary conditions. User-input errors cause equipment operations (e.g., valve operations, pump head increases or decreases, and power transients) that do not match the realistic system behavior.

2.2.4.2 Analyzing the Problem. Analysis of the RELAP5-3D© results is a methodical process that should be designed to

- Check the output for indications that the code did not converge properly. Such indicators include nonphysical state properties and excessive mass error. If the code did not converge numerically, error messages should be visible.

- Check the output for nonphysical results. Results indicating liquid over vapor/gas (when vapor/gas flow rates are not sufficiently large to cause counter-current-flow-limiting), prolonged existence of metastable thermodynamic states, and unphysical oscillations that could be numerically-induced are all examples of nonphysical results that may lead to erroneous conclusions concerning the code's calculated thermal-hydraulic behavior. Such problems should be detected at the beginning of the analysis.

- Check the calculation for results that may be unrealistic. The calculated flow regimes and heat transfer modes should be studied to ensure that the code is not assuming unrealistic conditions. For example, slug flow in a 1-m diameter pipe is usually suspect. Also, excessively large slip ratios (the velocity of vapor/gas divided by the velocity of liquid) indicating insufficient interphase drag and core void fractions that appear to remain at values just below or just above limits that trigger different heat transfer regimes should be examined to determine whether the code is producing realistic thermal-hydraulic behavior simulations. See Section 4 of Volume IV for a description of the logic for selecting different heat transfer regimes.

---

a. Code output is said to be convergent when the same result is obtained regardless of the nodalization.

- Boundary conditions should be checked to ensure that key events are occurring as prescribed. Boundary conditions and others that control the direction of the transient (e.g., valves opening, pumps beginning to coast down, or heater rod power turning off) should be checked by the user to ensure that all is happening as expected.

- Every aspect of the calculation should be thoroughly understood. The depressurization rate, various indications of core heatup, drain rate of the system at various locations, liquid holdup, indications of condensation or evaporation, transition from subcooled to two-phase break flow, and other conditions should all be explainable. Also, the results of the user's calculation should be understood from the perspective of previous calculations done on the same or similar facilities.

Early in the analysis phase, the user should use graphics so that all the necessary output is obtained. Also, the analyst should use RELAP5-3D© 's minor edits whenever possible. Such diagnostics are invaluable during the analysis process for a thermal-hydraulic calculation.

Analyzing the RELAP5-3D© results is one of the most important phases of the total analysis process. The first and foremost caution is that the user must never accept an answer from the code without first asking whether the result seems reasonable. A thorough examination of the code output for each analysis is a cardinal rule that must never be violated. The user must evaluate whether each and every trend shown by the calculation is consistent with the boundary conditions, the initial conditions, and the known behavior of a simplified representation of the problem.

2.2.5 References

2.2-1. V. H. Ransom and V. A. Mousseau, “Convergence and Accuracy Expectations for Two-Phase Flow Simulations”, *Canadian Nuclear Society International Conference on Simulation Methods in Nuclear Engineering, Montreal, Canada, April 18-20, 1990*.

2.2-2. V. H. Ransom and V. A. Mousseau, “Convergence and Accuracy of the RELAP5 Two-Phase Flow Model,” *International ANS Topical Meeting on the Advances in Mathematics, Computation, and Reactor Physics, Pittsburgh, PA, April 28-May 2, 1991*.

2.3 Basic RELAP5-3D© Modeling Units

The process of building a RELAP5-3D© model can be envisioned as analogous to physically building the system that is being modeled. Just as the physical system is composed of pipes that are connected by welded or bolted flanges, valves, pumps, and other components, so is the RELAP5-3D© model. Although a few of the RELAP5-3D© building blocks are specialized (e.g., the PUMP component and the VALVE junction), most are general purpose.

The RELAP5-3D© building blocks can be divided into four fundamental groups: thermal-hydraulic, heat structures, trips, and control variables. The thermal-hydraulic group is composed of components

designed to simulate fluid passages and fluid-handling equipment. Heat structures are designed to simulate material mass and the interactions between the material mass and the fluid in the fluid passages. Trips are designed to simulate the signals that initiate equipment actions of various sorts (e.g., turning on a pump at a desired time or causing a valve to open at one pressure but close at another pressure). Finally, control systems are designed to give the code modeling added capability by allowing equipment control systems (e.g., proportional- integral-differential controllers and lead-lag controllers) and "lumped-node" systems to be simulated. The basic building blocks for the thermal-hydraulic and control variable groups are listed in **Table 2.3-1** and **Table 2.3-2** respectively.

Table 2.3-1 Summary of the RELAP5-3D© thermal-hydraulic building blocks.

Component	Label	Schematic	Primary Uses
Single-volume	SNGLVOL		Represents a portion of stream-tube that doesn't require a PIPE or BRANCH.
Pipe	PIPE		Represents a pipe in the system. PIPE can have 1 to 100 subvolumes. PIPE with more than 1 subvolume has internal junctions connecting the subvolumes.
Annulus	ANNULUS		Special form of PIPE. Has the same characteristics as PIPE but is used to simulate annular flow passages (e.g., downcomer).
Pressurizer	PRIZER		Special form of PIPE. Has the same characteristics as PIPE but is used to simulate a PWR pressurizer.
Branch	BRANCH		Represents a stream-tube flow juncture that can have as many as 9 junctions defined.
Separator	SEPARATR		Special form of BRANCH that simulates a liquid separator in a steam generator.
Jet Pump	JETMIXER		Special form of BRANCH that simulates a jet pump.
Turbine	TURBINE		Special form of BRANCH that simulates a turbine.
ECC Mixer	ECCMIX		Special form of BRANCH that simulates a stream-tube flow juncture with a potential of large condensation rates.
Single-junction	SNGLJUN		Designed to connect one component to another.
Multiple-junction	MTPLJUN		Connects components to other components (up to 100 connections allowed).
Time-dependent volume	TMDPVOL		Specifies boundary conditions on system model.

Table 2.3-1 Summary of the RELAP5-3D© thermal-hydraulic building blocks. (Continued)

Component	Label	Schematic	Primary Uses
Time-dependent junction	TMDPJUN		Connects one component to another and specifies junction boundary conditions concurrently.
Valve	VALVE		Simulates the actions and the presence of six different valve types: check, trip, inertial, motor, servo, and relief. The valve component is a special junction component.
Pump	PUMP	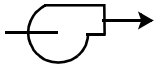	Simulates the actions and presence of a centrifugal pump.
Accumulator	ACCUM	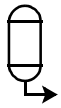	Simulates a PWR accumulator. Model includes not only the vessel, but also the accumulator surge line.
Multi-dimensional component	MULTID	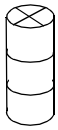	Simulates a PWR core and downcomer.

Table 2.3-2 Summary of RELAP5-3D© control variable building blocks.

Component	Label	Function
Sum-Difference	SUM	Allows addition or subtraction of variables
Multiplier	MULT	Allows multiplication of variables
Divide	DIV	Allows division of two variables
Differentiating	DIFFRENI or DIFFREND	Performs differentiation of a variable as a function of time
Integrating	INTEGRAL	Performs integration of a variable as a function of time
Functional	FUNCTION	Defines a table lookup functional relationship to a variable

Table 2.3-2 Summary of RELAP5-3D© control variable building blocks. (Continued)

Component	Label	Function
Standard Function	STDFNCTN	Performs absolute value, square root, exponential, natural logarithm, sine, cosine, tangent, arc-tangent, minimum value, or maximum value operation on designated variable
Delay	DELAY	Acts as a time delay factor operating on designated variable
Unit Trip	TRIPUNIT	Becomes true at defined time (when true = defined factor, when false = 0); also can be defined as complementary function
Trip Delay	TRIPDLAY	Becomes true at defined time (when true = trip time x factor, when false = -1)
Integer Power	POWERI	Gives variable raised to integer constant power I quantity times constant
Real Power	POWERR	Gives variable raised to real constant power R quantity times constant
Variable Power	POWERX	Gives variable raised to real variable power V quantity times constant
Proportional-Integral	PROP-INT	Defines a proportional-integral controller
Lag	LAG	Defines a lag controller function
Lead Lag	LEAD-LAG	Defines a lead-lag controller function
Constant	CONSTANT	Defines a constant value to be used with other control variables
Shaft	SHAFT	Defines shaft characteristics that may be used in conjunction with a generator
Pump control	PUMPCTL	Defines a pump controller (used principally during steady-state portion of analysis)
Steam control	STEAMCTL	Defines a steam flow controller (used principally during steady-state portion of analysis)
Feed control	FEEDCTL	Defines a feedwater flow controller (used principally during steady-state portion of analysis)

2.3.1 Thermal-Hydraulic Group

Within the thermal-hydraulic group there are eleven fundamental RELAP5-3D© components that can be grouped by function. General components that are used for simulating stream-tube volumes are the single-volume component; the pipe, annulus, or pressurizer component; and the branch component (including the separator, jet-mixer, turbine, and emergency core cooling mixer components). General components that are used to provide stream-tube connections from one component to another are the single-junction component and the multiple-junction component. Components designed to simulate boundary conditions are the time- dependent volume component and the time-dependent junction component. Components designed to simulate particular equipment are the valve component, the pump component, and the accumulator component. The component that is used for multi-dimensional hydrodynamics is the multid component. Each of these components is listed in **Table 2.3-1**. If more detailed information is required, consult Section 4.

2.3.2 Heat Structures

The heat structure modeling capability inherent to the RELAP5-3D© code allows simulation of all of a system's material mass. System structures constructed of different types of materials (e.g., a cast iron pipe covered externally with insulation and plated on the inner diameter with stainless steel) can be modeled easily using the code. Also, the code can simulate the presence of heat sources within heat structures such as nuclear fuel or electrical heating elements

The heat structures simulate the behavior of not only the core fuel rods in a reactor system, but also the various plant structures. Thus, the heat structures simulate both energy storage in the material mass and energy transfer to or from the material mass to the fluid in the simulated stream-tubes. Energy storage and transfer in the heat structures is calculated by the code using the geometry defined by the user; each heat structure is sized to interact with particular stream-tubes and each heat structure can be finely nodalized to provide a rather detailed temperature distribution in one dimension. A plane slab structure, a cylindrical structure, or a spherical structure is allowed for each slab. The code assumes that energy flow to and from the heat structures is in a direction normal to the stream-tube flow direction. Consequently, the heat structure nodes are aligned in the direction normal to the fluid flow. A comprehensive description of the RELAP5-3D© heat structure nodalization process is given in Section 4.

2.3.3 Trips and Control Variables

The trip capability available in the RELAP5-3D© code enables the user to specify actions during a simulated system transient. When coupled with the code's control variables, the user has a versatile tool that greatly expands the capabilities of the RELAP5-3D© code.

The trip logic can be used with the time-dependent volume component, the pump component, the valve components, the time-dependent junction component, some options of the branch component, the accumulator component, and with tables used to describe reactor kinetics characteristics and heat structure

characteristics. In general, the trip's condition is either true or false. The trip's condition is determined at each time step by checking the status of the trip-defined test. The test consists of comparing the specified variable to either another variable or a parameter using specified conditions such as equal to, greater than, less than, greater than or equal, less than or equal, or not equal. In combination with the "logical trips," very complex logical sequences can be simulated since the "logical trips" allow comparison between two or more trips such that one or more trips may be required to be true to create a true "logical trip" condition. A detailed description of the trips is given in Section 4.

The code's control variables consist of 21 capabilities (see **Table 2.3-2**). In essence, the control variables can be used for three primary functions: (a) to simulate equipment control systems, (b) to create "lumped node" parameters, and (c) to add further dimensions to the boundary conditions imposed on the thermal-hydraulic group and heat structure group components.

2.3.3.1 Simulating Equipment Control Systems. Every piece of equipment that is a component of a physical system has a control system. The control system may be no more sophisticated than a simple on/off switch that is controlled by the equipment operator. Sometimes, however, equipment control systems can be highly complex and sophisticated. Consequently, the code has control variable components designed to allow the user to model virtually any physical component of the equipment system. Specifically, the lag, lead-lag, proportional-integral, and differential components are designed to simulate common controller functions. When used in combination with the other control variable components, even the complex and sophisticated Babcock & Wilcox's (B&W's) PWR Integrated Control System has been successfully modeled using RELAP5-3D© .

2.3.3.2 Simulating "Lumped Node" Systems. Equipment components such as containments, tanks, flow systems, and balance-of-plant components can be simulated using the control variables by creating difference equation sets that represent the specific component's behavior. The equation sets can then be coupled to the RELAP5-3D© model of primary interest using tables and simple functional relationships to simulate the interactions between the primary thermal-hydraulic model and the "lumped node" models.

2.3.3.3 Enhancing the RELAP5-3D© Model Boundary Conditions. The control variables can be used to simulate the presence of instrumentation that provides key input to system trip or equipment functions. For example, a piece of instrumentation affected by the total pressure rather than the static pressure can be modeled by creating a control variable that monitors the fluid static pressure and the fluid velocity head to calculate the total pressure head (in the absence of a gravitational change), and then provides a value to be compared to a trip test value. Similarly, the critical flow energy flux can be calculated using the control variables to determine the flow enthalpy at each time step (since RELAP5-3D© only calculates the flow specific internal energy, not the specific enthalpy).

2.4 Basic RELAP5-3D© Modeling Guidelines

Using the building blocks described in the previous section, the model shown in **Figure 2.2-1** through **Figure 2.2-3** was constructed. The model uses eight of the ten fundamental components available in the thermal-hydraulic group together with heat structures. Trips are used to change the operational state

of the valves, the pump, the pressurizer heater rods, and the core power level as a function of the following variables:

- Primary inventory level (pressurizer liquid level).
- Secondary inventory level.
- Primary and secondary pressures.
- Hot and cold leg temperatures.

A summary of the basic guidelines and their applications are given in the next three subsections to illustrate the first steps in constructing a RELAP5-3D© model.

2.4.1 Simulating the System Flow Paths

The flow paths shown in **Figure 2.2-1** through **Figure 2.2-3** were nodalized by adhering to the following general rules:

- The length of the volumes is such that all have similar material Courant limits.
- The volumes have a length-to-diameter ratio greater than or equal to 1 with the exception of the bottom of the pressurizer (see component 341, volume 7 in **Figure 2.2-1**). The volume representing the bottom of the pressurizer was sized to have a length-to-diameter ratio less than 1 to allow better definition of when the pressurizer empties during an LOCA.
- A nodalization sensitivity study was undertaken to determine the best model representation. Thus, several different nodalizations of the steam generator U-tubes were studied.
- Portions of the model containing a “free surface” were nodalized such that the “free surface” lies approximately midway between the node boundaries. Thus, the normal pressurizer liquid level is approximately at the middle of component 341, volume 2.
- Multiple, parallel flow paths were combined. Therefore, even though there are eight to ten flow paths between the vessel downcomer (components 100 and 102) and the vessel upper head and upper plenum (components 126, 122, and 120), only two paths were simulated (junctions 12601 and 10203). All the small flow paths were simulated by these two flow paths.

2.4.2 Simulating the System's Heat Structures

A system's heat structures should be simulated if there will be interactions between the heat structures and the fluid stream-tubes. Circumstances leading to such interactions occur because of

- The presence of power sources (energy sources) located in heat structures.
- Large fluid temperature changes. For example, if a system is initially at 1,000 psia and a large valve suddenly opens such that the system depressurizes rapidly, the fluid temperature will follow the saturation temperature during the depressurization. Consequently, the heat structures, at the initial fluid temperature, will then transfer energy to the fluid in an effort to reduce the heat structure to fluid temperature potential.
- Environmental losses. Although commercial plants have thermal losses to the environment that represent only a small percentage of core decay heat, scaled experiments may have losses that are large compared to simulated core decay heat.
- Primary to secondary energy transfer in heat exchangers, steam generators, etc. A typical commercial PWR provides steam to the power turbines by boiling secondary inventory using energy supplied by the primary core fuel rods.

Based on the above guidelines, the heat structures for the one-loop model shown in **Figure 2.2-1** through **Figure 2.2-3** were constructed. The reader should note that the majority of the structural materials were simulated including the reactor vessel walls, the steam generator vessel walls, the steam generator U-tubes (heat structure number 1081), the reactor core (heat structure number 1141), and the pressurizer heater rods (heat structure numbers 3411 and 3421).

2.4.3 Trips and Control Variables

The actions and/or response of the model's simulated equipment is triggered and sometimes controlled by the trips and control variables. Thus, the following equipment has trips and sometimes control systems that guide its behavior during off-normal conditions:

- Pressurizer heaters (heat structures 3411 and 3421).
- Core (heat structure 1141).
- Pressurizer spray (valve component 338).
- Pressurizer safety valve (valve component 346).
- Power-operated relief valve (valve component 344).

- Reactor coolant pump (pump component 414).
- Primary fill system (time-dependent junction component 972).
- Secondary steam system valves (valve components 755, 765, and 804).
- Feedwater system (time-dependent junction component 455).

As an example, the control system and governing trips for the on/off pressurizer heater (heat structure 3421) is shown in **Figure 2.4-1**. The parameter labeled Y_{217} is the heater rod power in MW. Y_{217} equals 0 when trip 612 is false and equals 0.9 MW when trip 612 is true. The logic works because the unit trip equals 0 when trip 612 is false and equals 1 when trip 612 is true. The trip logic, shown in the table below the controller logic, shows that the state of trip 612 is based on the state of trips 611, 510, 511, and 512. Trips 510, 511, and 512 are called variable trips and trips 612 and 611 are called logical trips. Trip 510 states that when controller 202 (an indication of the pressurizer liquid level) is less than or equal to -0.144, the trip becomes true and it is then always latched open. Trip 511 states that when the hot leg to cold leg temperature difference bias (represented by controller 203) is less than -0.05, the trip becomes true and only remains true as long as that condition is maintained (i.e., the trip is not latched). Trip 512 states that whenever the primary system pressure bias is less than or equal to -25 (controller 212), then the trip is true and the trip is not latched. If either trip 511 or trip 512 is true, then trip 611 is true, but not latched. Finally, if trip 611 is true and if trip 510 *is not true* (represented by the -510), then trip 612 is true.

Although the logic for having the pressurizer on/off heater is simple, five trips were required to program all the conditions that must be satisfied prior to having the heater on. An elaborate system can have hundreds, or even thousands, of controllers and trips.

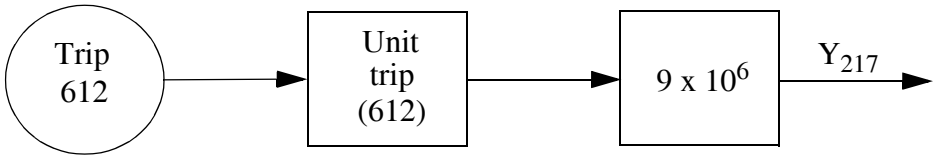

Trip	Parameter	Operator	Constant	Latch or no latch
612	611	AND	-510	N
611	511	OR	512	N
510	CNTRLVAR 202	LE	-0.144	L
511	CNTRLVAR 203	LT	-0.05	N
512	CNTRLVAR 212	LE	-25.	N

Figure 2.4-1 Pressurizer heater rod controller: on-off (component 3421).

3 General Practices

This section discusses general practices for applying RELAP5-3D© including standard procedures, calculational node and mesh sizes, options, and special model applications.

3.1 Standard Procedures

Standard procedures for input preparation, debugging the model input, problem execution, and output interpretation are presented in this section.

3.1.1 Input Preparation

Attention to detail in preparing, documenting, and checking the input limits errors and provides a valuable model reference for tracking error corrections and subsequent model improvements. By using standardized input format and conventions, input errors are easier to detect. The following sections discuss standard procedures for model documentation and quality assurance, input deck arrangement, and conventions.

3.1.1.1 Model Documentation and Quality Assurance. The primary tool for RELAP5-3D© model quality assurance is the model workbook. The references, assumptions, and calculations needed to generate the code input are assembled into a workbook that is retained and controlled. A formal requirement to produce a model workbook forces a discipline on the modeler that reduces the possibility of errors. Furthermore, formally requiring the written data in the workbook to be certified forces a discipline on an independent checker.

A typical workbook might begin with discussions of the purpose for the model, general facility references, the scope of the model, top-level assumptions, and relation to existing models. Next, an overall model nodalization scheme is developed and documented in the workbook. The nodalization numbering scheme should be carefully considered; logical numbering of various modeling regions greatly facilitates error detection and output interpretation. As an example, a logical scheme for a three-loop pressurized water reactor might number the components in the loop 1 region from 100 to 199, loop 2 from 200 to 299, and loop 3 from 300 to 399. Reactor vessel components might be numbered 400 to 499, pressurizer components 500 to 599, feedwater and steam systems 600 to 699, and additional systems (e.g., makeup, letdown, safety injection, accumulators) 700 to 799. Numbering scheme symmetry should be used where possible. In the above example, if component 120 represents the hot leg in loop 1, then components 220 and 320 would represent the hot legs in loops 2 and 3, respectively.

A minor consideration, but one that can prevent misinterpreting the output, is to avoid numbering components from 1 to 99. Plotted and tabulated code output is referenced by component or cell number with four zeros appended for a one-dimensional component (e.g., the pressure in branch 120 is referenced P 120010000). The digits represented by the appended zeros were included to provide a means of referencing the multi-dimensional component MULTID. By limiting component numbering to numbers from 100 to 999, all component references are standardized at 9 digits (three for component, two for cell,

and four trailing zeros for one-dimesional components). The advantage of this approach is that the possibility of misreading component numbers in the output is avoided. For example, if component numbers from 1 to 99 are used, then on casual inspection an indicator 120010000 may be visually mistaken for 12010000 (the first for component 120, the second for component 12). If all component numbers are 100 or larger, then there is no ambiguity because the first three digits of the indicator are always the component number.

The main portion of the model workbook contains worksheets to document the information needed to assemble the code input. The workbook is typically assembled in an order consistent with the component numbering. For each component, the hydrodynamic data are typically documented first, followed in turn by the heat structure data and control system data. It is useful to tabulate component data in the order that it is to be input. (The tables can include page number references to the location of each input parameter.) This greatly reduces the effort required to enter the code input parameters. A sample workbook page is shown in **Figure 3.1-1**. For each model component the workbook documents (a) the sources of information used to assemble the model (such as drawing and report numbers), (b) assumptions, (c) any calculations needed to convert the raw data, and (d) the final values of the code input parameters.

When completed, the workbook is used directly to key-enter the code input parameters into a computer file for the model. Diligence should be used at this stage of the process since key-entry errors are likely. Experience has shown that the careful entering of each number and a detailed comparison of the resulting computer file and workbook are worthwhile efforts. While this effort is intensive, it is needed to prevent serious errors such as mis-specifying input by orders of magnitude.

At the INEEL, it is a standard quality assurance practice that each input model be independently checked by an engineer other than the one who developed the model. Independent checking involves certifying all aspects of the model development process: verifying references, considering the appropriateness of the assumptions, double-checking the hand calculations, checking the units, and confirming the translation of the data to the computer file. Any anomalies found during the checking process are resolved between the model developer and checker, and the model is modified accordingly. The model workbook is signed and certified by both the developer and checker.

The independent checking activity is perceived by many engineers (especially senior engineers) as tedious, uninteresting work. As a result, the checking function tends to fall to junior engineers. Junior engineers prove capable of certifying the details of a project but may be incapable or unwilling to challenge top-level modeling decisions and assumptions. In the authors' opinion, the independent checking function pays significant quality assurance benefits both in avoidance of costly errors and in the ultimate confidence of analysis results. To be effective, senior engineers must recognize that the benefit of checking is well worth the tedium of the effort required and approach the task positively. Junior engineers must recognize that, as independent checkers, it is important they concur with or question the top-level assumptions.

3.1.1.2 Input Deck Arrangement. The code accepts data based on the “card number” specified in the first field on each line of input. For a given card number, the code accepts the input parameters

CALCULATION WORK SHEET

Subject: Sensitivity 1 SG Nodalization Study Date: July 5, 1985

Prepared by: M. A. Bolander Checked: 7-30-85 CDF Work request:

Take volume 325 (shown on page 2) and divide it in half.

original volumes new volumes

The original length of 325 is 7.906 ft (workbook page 79)

Volume is 338.938 ft^3

From the lower tube sheet to the upper tube sheet the distance is 52.0312 ft (workbook page 67)

The upper grid spacer is 48.250 ft from the lower tube sheet.

The length of the new 325 and 320-3 volumes = (1/2)(7.906) = 3.9530 ft

Locate the upper grid spacer: 52.0312 ft - 3.9530 ft = 48.0782 ft

The grid spacer physically is at 48.250 ft. Assume the grid spacer sits in volume 325. Therefore there is 1 grid spacer in volume 325 and 1 grid spacer in volume 320-3.

Volume of new 325 =

$$(43.117)(3.9530) + \pi(5.0573^2 - 4.9323^2)(1.0938) - \frac{6.2356}{2} = 171.6146 \ ft^3$$

Refer to: workbook pages 71, 72, 79

Figure 3.1-1 Sample model workbook page.

specified in the code manual as sequences of floating point, integer, and alphanumeric entries. On any given card, the data entries must appear in the proper sequence and be separated by one or more blanks. The cards may appear in any order, as long as all required cards and data entries are present. If a card number is duplicated in the input listing, the code identifies it as a "replacement card" and uses the information on the last card entered with that number.

A well-organized input deck includes comment cards that aid interpreting the input from a printed listing. Comments may be inserted through the use of the asterisk (*) or a dollar sign ($). On any line, all entries following an asterisk are assumed to be comments. An example of a fully-commented input listing is shown for a branch component in **Figure 3.1-2**. With this format, an analyst will spend a minimum amount of time counting fields and searching through the manual to understand the input.

As stated above, the input deck cards may appear in any order. In practice, however, arranging the cards in a logical manner is preferred. At the INEEL, input decks typically start with the title, job control, and time step control cards. These are followed in sequence by the minor edit requests, trip specifications, hydrodynamic components, heat structures, user-input data tables, control variables, and reactor kinetic specifications. An input deck is generally arranged by increasing card numbers when this arrangement is used. Within each of the above groups, data are similarly arranged in order of the card numbers (e.g., the trips are listed in numerical order).

3.1.1.3 Conventions. The benefits of a logical numbering scheme for model components were described in Section 3.1.1.1. Similar benefits can be gained from a logical numbering scheme for heat structures and control variables.

For heat structures, benefits may be gained by assigning heat structure identifiers consistent with the hydrodynamic volumes with which they are coupled. Heat structures are referenced by the heat structure/ geometry (CCCG); for each heat structure, any CCCG may be selected. If, however, the CCC digits correspond with associated hydrodynamic volumes, interpretation of the output is enhanced because only one numbering scheme needs to be remembered. As an example, consider a pressurizer that has been modeled with 8-cell pipe 620. The hydrodynamic volumes are thus numbered 620010000, 620020000, ..., 620080000. For the heat structures representing the pressurizer shell, a heat structure geometry number of 6201 would be selected, and 8 individual heat structures would be developed and connected in turn to cells 620010000 through 620080000. The advantage of this method would be that in the output heat structure, 6201005 can be easily associated with the pressurizer wall adjacent to the fifth hydrodynamic cell (620050000) of the pressurizer. Where it is required that more than one heat structure be connected to the same volume, the above convention may be extended by using the same CCC but increasing the G. In the above example, a heat structure for a pressurizer heater might be identified with a CCCG of 6202.

For control variables there is a similar benefit to be gained by selecting control variable numbers consistent with a representative component. In the above example, the control variables associated with the pressurizer heaters and spray system might be numbered 610 to 620. The user is cautioned, however, that

```
$**********************************************************************$
*hydro          component name          component type
1150000          "hxinplen"                  branch
*----------------------------------------------------------------------------------------------------$
*hydro          no. juns                    vel/flw
1150001            2                           0
*
*hydro          area                        length                  volume
1150101          0.                          1.065                   1.265
*
*hydro       horz angle                  vert angle                 delta z
1150102          0.                          0.                      0.
*
*hydro       roughness                   hyd diam                   fe
1150103      0.0000457                     1.265                     00
*
*hydro    εbt   pressure     tempe
1150200  0     1808064.    332978.    2414206.  0.
*
*hydro      from          to            area       f loss       r loss       vcahs
1151101    110010000    115000000    0.          0.           0.           00100
1152101    115010000    120000000    0.          0.           0.           00100
*
1152110      0.01412   0.   1.   1.
*
*hydro                  f flowrate          g flowrate          j flowrate
1151201                   9.03925             9.03925             0.   *   809.737
1152201                   2.111656            2.111656            0.   *   804.918
$**********************************************************************$
```

Figure 3.1-2 Example of full-commented input for a branch component number.

the control variable numbering scheme must consider that control variables are evaluated in numerical order during each time step. If control variable 625 refers to control variable 620, the new time value of control variable 620 is used. However, if control variable 620 refers to control variable 625, then the old time value of control variable 625 is used.

As a general convention, it is advantageous to define positive junction directions consistent with flow during normal operation of the system. With this technique, indications of positive junction flow (positive mass flow rates and velocities) in the output can be considered normal by the analyst. More significantly, the appearance of negative junction flow (indicated by minus signs) can be an indicator highlighting

unusual behavior to the analyst. The sense of the junction flow is defined by the “FROM” and “TO” hydrodynamic cells specified. “FROM” to “TO” cell flow is considered to be positive.

The user does not have the capability to change the direction of positive heat transfer. The code convention on each surface of a heat structure is that the flow of heat from the structure to the fluid is positive. As an example, consider the heat structure of a steam generator tube. The left side of the structure is connected to the primary coolant system; the right side of the structure is connected to the secondary system. During normal operation, with heat flowing from the primary to the secondary, the heat transfer (rate and flux) on the left surface is indicated as negative while it is positive on the right surface.

The user does, however, have the option of specifying either the left or right surface of a heat structure as the inner surface (in cylindrical and spherical geometries). It is advantageous, but not necessary, to make this decision consistently. At the INEEL, the convention is to assign the geometrical inner surface as the left surface and the geometrical outer surface as the right surface. For example, cylindrical pipe walls are modeled with the inner/left surface adjacent to the fluid within the pipe and the outer/right surface representing the outside of the pipe. For fuel rods, the left surface represents the centerline of the rod (specified as an adiabatic boundary) and the right surface represents the outside of the cladding.

Extended trip and control variable capabilities have been included in the code and the user has the option in each case to select the original or extended capability. Note, however, that all trips and all control variables in a problem must conform to the option selected. These extended capabilities were included as the size of control system models outstripped the originally-defined limits on the number of control variables and trips. For new models, selecting the extended options is recommended to allow greater capability for adding to the model.

3.1.2 Model Input Debugging

The input processing routines provide excellent error-checking and error-interpretation capabilities. Input processing error checking is invoked when executing both new- and restart-type problems. All model input errors result in the generation of an informative error message. The presence of one or more input errors results in job termination and a message that the termination was due to input error. As a word of caution, the RELAP5-3D© error-checking functions are primarily intended to check for compliance with the input data requirements. Secondarily, checking is performed for model consistency (e.g., that elevations are consistent around flow loops). However, the input error-checking function may not uncover basic input errors such as mis-specifying a volume of 10 m^3 as 1,000 m^3. Therefore, successful completion of RELAP5-3D© input processing should not be considered a replacement for the quality assurance activities described in Section 3.1.1.1.

Optional job control Card 101 provides a capability to automatically terminate a job following input processing. If the INP-CHK option is specified, all input processing functions are performed and the initial time major edit is generated, but no transient calculation is performed. If the RUN option is selected, the

input processing is performed, the initial time major edit is generated, and the transient calculation is initiated. If Card 105 is not input, the RUN option is assumed.

An efficient method for debugging a new RELAP5-3D© input deck is described as follows. The complete model is first assembled into a single file and the model is executed in either the transient or steady-state modes as specified on Card 100. Either the INP-CHK or the RUN option may be selected on Card 101. A typical new input deck will likely contain many input errors so the execution will result in generation of a series of error messages. It is common for one actual error to propagate into the generation of multiple error messages. Therefore, the list of error messages generated will in general be much longer than the actual number of errors in the model. The user should read and consider each of the error messages in the order they were generated. This process results in one of the following determinations for each of the error messages: (a) the message clearly indicates an error in the deck and the resolution is clear, (b) the message is found to be caused by the existence of a previous error and is expected to be resolved when the primary error is corrected, and (c) the reason the message was generated is not clear. In practice, the error messages are very informative and the actual input errors are obvious to the analyst. A significant effort can be expended tracing the source of each error message. Instead, it is more efficient to survey the error messages, correct the obvious errors, and again execute the model. As a rule of thumb, only about one third of the error messages generated are caused by actual errors; the remainder are second-generation messages resulting from the primary errors. This iterative process proceeds rapidly to the removal of all input errors. Experience shows that a large input deck that has been entered with moderate care can be debugged with this process in about five iterations.

The iterative debugging process described in the previous paragraph can be much easier if the output of the debugging runs are reviewed on a terminal by an editor capable of searching for data strings. All input error messages are preceded by a string of eight asterisks (********). Because of this feature, the user should avoid using strings of asterisks to separate sections of the input deck. The removal of all errors results in the generation of the message “input processing completed successfully.”

The user should be aware that the input processing is subdivided into several sections of data checking that are performed in sequence. Depending on the nature of the errors found, the job may be terminated at the end of one of the sections before all of the error-checking sections have been executed. In this instance, only error messages for the sections that have been checked will appear. When these errors have been corrected and the checking proceeds to the next section, the number of error messages may increase. In other words, the analyst should realize that in this iterative process the number of error messages may not monotonically decrease.

As a part of the input processing routine, the elevation closure of all flow loops in the model is checked. An input processing failure message is generated if any of the flow loops fail to close elevation by more than 0.0001 m. Following such a failure, the elevation closure edit data may be examined to find the source of error. Input elevation inaccuracies in the fifth significant figure after the decimal point (i.e., on the order of 10^{-5} m) may or may not accumulate to give a difference of 10^{-4} m, depending on the numbering of the component.

A spurious input processing failure has been encountered by some users and is usually reported as a code execution failure occurring immediately after input processing has been completed. The diagnostic print-out states an arithmetic error or arithmetic overflow has occurred. The most common source of this error is the inadvertent specification of a noncondensable gas in the system. The error is created when the user specifies an incorrect value for the initial condition control word. Control words of 4, 5, 6, or 8 are reserved for mixtures with a noncondensable gas; the error occurs if any of these control words are used when a noncondensable gas has not been specified on Card 110.

3.1.3 Problem Execution

When the input deck has successfully passed input processing, an initial time edit will be generated by the code. If the RUN option is selected, problem execution proceeds from the conditions specified in the initial edit. The initial edit will be identified as zero time for NEW problems and as the time of the restart edit for RESTART problems.

3.1.3.1 Time Step and Edit Selections. The problem execution is controlled by the options specified on the 201-299 Time Step Control Cards. These cards specify the time step sizes and output features desired as the problem progresses from one time interval to the next. Card 201 specifies these options and the end time for the first time interval, Card 202 for the second time interval, and so on. Subdividing the problem into time intervals facilitates modifying the execution to suit the expected nature of the problem. For example, consider the case of a modeling action (such as closing a valve or tripping a pump) that is of particular interest and may slow the calculation at a given time (say 10 seconds). For this case, a first execution interval might be selected to end at 9 seconds. The second interval might include a reduced time step, and perhaps increased edit and plot frequencies, from 9 to 15 seconds. After 15 seconds, a third interval would then be used to return the time step and edit options to their original values. Note that execution is terminated if the problem time reaches the end of the last interval specified on the 201-299 Cards.

For each time interval, minimum and maximum time steps are specified. The code will attempt to execute the problem at the maximum time step. The first time step taken will be at the maximum value. The user is cautioned to use a small maximum time step size when first executing a model for which gross approximations of initial conditions have been specified. Time step size is automatically reduced based on a number of tests. The material Courant limit may not be violated. Mass, fluid property, quality, and extrapolation errors are monitored in each calculational cell and the time step is reduced if errors exceed internally preset limits. The major edit output indicates the criteria and model region causing time step reduction. This indication can be useful for improving model performance.

The code accomplishes time step reductions by repeated division by two until the errors are within acceptable limits, the minimum time step size is reached, or a failure is encountered. The user should note that this reduction process will result in running near the Courant limit only if the maximum time step size is appropriately selected. As an example, consider a problem where a 0.1 second maximum time step is specified and the Courant limit is 0.09 seconds. If not reduced for other reasons, the code will start with the 0.1 second maximum and repeatedly divide by two until a time step less than the Courant limit is attained. In this example, the code will execute the problem at 0.05 seconds, a much smaller time step than the 0.09

second Courant limit. Run time efficiency may be improved in the example by specifying a maximum time step size that is smaller than the Courant limit, such as 0.085 seconds.

Frequently, when a calculation is running at a particularly slow pace due to time step size reduction, the selection of a smaller maximum time step size improves the progress of the calculation. This situation occurs when the specified maximum time step size is unacceptably large for the problem. When calculational difficulties are encountered, the code reduces the time step size. With the reduced time step, the code calculates through the difficulties and begins to recover. However, as recovery occurs the time step size is increased and the difficulties reoccur. Thus, reducing the maximum time step size prevents reoccurrence of the difficulties and improves the overall progression of the calculation.

It is not possible to formally recommend generally-applicable minimum and maximum time step sizes. These selections should be made considering the peculiarities of the code model, the problem to be solved, and the findings of any studies investigating the effect of time step size on calculation results. Furthermore, an appropriate time step size will vary during the course of a transient calculation as the calculated phenomena change. As a practical but informal guide, the user should consider using a minimum time step size of 1×10^{-7} seconds and a maximum time step size of the Courant limit (but not greater than 0.2 seconds). While a smaller minimum may be needed in some situations, if the above limit proves unsatisfactory it is usually an indication of significant calculational problems that should be traced or reported. The calculated phenomena should be carefully examined before proceeding. While it may be possible to execute a problem at very large time steps, the analyst should carefully evaluate the effects of large time steps in the context of representative model phenomena time constants and loop transit times.

The time step control cards contain a packed word (ssdtt) specifying the code output format. The user is referred to Volume II of the code manual for details regarding options. Generally, the option 00003 (or simply 3) should be selected. For persistent code failures (i.e., those that are not remedied by revision of time step size), problem diagnosis may be aided by obtaining a major edit at every time step as the problem is approached. This selection is made by the option 00103; obviously, care should be exercised to limit the size of the output file.

The minor, major, and restart edit frequencies are also specified on the time step control cards. These frequencies are specified as integer multipliers of the maximum time step size. For example, with a maximum time step of 0.1 seconds, a minor edit frequency of 10, a major edit frequency of 100, and a restart frequency of 200, the code will generate minor edits every 1 second, major edits every 10 seconds, and restart points every 20 seconds. In addition, the code generates minor, major, and restart edits at the initial problem time and at the end times for each of the 201 through 299 Cards. If a transient code failure occurs, the code also generates these edits at the time of the failure and will designate the failure edit as a nonstandard edit. While review of the failure edits usually is quite valuable for understanding the failure mechanism, the user should not use the failure edit as a restart point following correction of errors. For this purpose an appropriate (usually the preceding) restart time should be used.

The selection of the minor edit frequency is particularly important because the restart/plot output file will contain data points with the same frequency.[a] Once a calculation is performed, it is not possible to recover the data between these data points. Data for virtually all calculation parameters (pressures, temperatures, void fractions, mass flow rates, etc.) are available on the restart/plot file. A common misconception is that a parameter needs to be specified using a minor edit request in order to be available in the output when the calculation is complete. A minor edit request affects only the printed output. It is not necessary to specify all parameters needed for output in advance; this determination may be made after the calculation has been completed. The output file may be accessed repeatedly as new data needs arise.

It is recommended the user select minor edits for an appropriate plot output frequency, major edits for an appropriate phenomena snapshot frequency, and restart edits for an appropriate backup following failure frequency.

3.1.3.2 Steady-State, Transient, and Strip Modes. A calculation may be executed in the steady-state, transient, or strip modes as specified on control Card 100. In the steady-state mode, the thermal capacitances of all heat structures are artificially reduced to speed problem response time; execution is terminated when internal tests for rate of change in parameters are satisfied. As a general recommendation, the steady-state mode is not recommended; difficulties have been encountered, specifically with premature termination. Instead, steady-state conditions are typically attained by controlling boundary conditions and executing in the transient mode. With this technique, convergence can be expedited by manually reducing the thermal capacitances. Once a satisfactory steady-state condition has been calculated, the true capacitances are restored before performing transient calculations. The procedures for obtaining a steady-state are described in greater detail in Section 5.7.

The strip mode is used to extract specific data channels from the output file of an existing calculation. In this mode, the restart-plot file and a file containing the list of desired data channels are executed. The resulting output is a compacted file, containing only pertinent data, that is suitable for driving a separate plotting routine.

3.1.3.3 Transient Execution Failures. An extensive data dump is generated when a transient execution failure is encountered. One or more error messages are contained in the dump explaining the nature and cause of the failure. These error messages are usually not as informative as error messages concerning input errors. A typical error message might, for example, indicate a thermodynamic property failure in cell 12001. The user should understand that this condition, perhaps a pressure above the critical point, is the immediate cause of code failure and not necessarily the root cause of the failure. Scrutinizing the major edit at the failure point should be the first step in identifying the problem.

Some thermodynamic property failures can be eliminated by decreasing the user required maximum time step (Word 3, Cards 201 through 299). This is done by restarting from the last restart point before the failure. The original user requested maximum time step is used until just before the failure, at which point

a. The user should specify the edit frequency carefully. A huge quantity of output can be generated that may require large amounts of disk storage space.

a smaller user requested maximum time step is used. In some cases, it is even possible to eliminate the failure by increasing the user requested maximum time step size. It has been found that simply halving or doubling the user requested maximum time step size often does not help. It is better to decrease the user requested maximum time step size by multiplying by a factor such as 0.8 or 0.3, or to increase the user requested maximum time step size by multiplying by a factor such as 1.3 or 1.8.

A common cause of transient execution failure is mis-specification of initial or boundary conditions. If, for example, a loss-of-coolant accident transient is initiated from a calculated steady condition and a failure is encountered shortly after the calculation begins, a frequent cause is an unintended perturbation of the steady conditions by the user. The user should confirm that initial and boundary conditions (and changes in them as the transient is initiated) are appropriate. If boundary and initial conditions appear to be in order, the next step should be to significantly reduce the maximum time step size selected.

3.1.3.4 Normal Termination of Transient Execution. The normal termination of a transient calculation may be accomplished one of three ways. First, a normal job termination occurs when the problem time reaches the end time specified on the last time step control Card (201 through 299). Second, a normal job termination occurs when the computer time expended reaches the limit specified by the inputs on the 105 control Card. Third, a normal job termination may occur by trip, as specified on the 600 Card. Thus, the user has the flexibility of terminating the calculation based on problem time, computer time, or some occurrence in the calculation (e.g., when a pressure limit is exceeded). It is important for the user to ensure a normal termination using one of these methods. Failing to internally (i.e., within RELAP5-3D©) stop the calculation before expending all the computer time requested on an external job card will result in an abnormal termination. In that case, some or all of the data generated by the job may be lost.

3.1.4 Code Output

There are two forms of code output for each calculation: printed output and the restart/plot file.

3.1.4.1 Printed Output. During execution of the code, a printed output file is generated according to the options selected. A typical output file begins with a simple listing of the input. The listing is followed by input processing information, including an echo of the input requested. This echo represents the actual data accepted by the code for each of the input values. Note that there is a chance of interpretation error (e.g., in the case of replacement cards). When a card number appears more than once in an input deck, only the input contained on the last card entered is used by the code. The presence of a replacement card is noted in the input listing; however, the message appears adjacent to the replacement card, not the original card. Therefore, it is to the user's advantage to use the echoed input, not the listing of the input, as a true indication of the input used.

The printed output file continues with a listing of the initial major edit. This edit is, in turn, followed by the major edits as requested by the user and additional major edits generated by the code. The minor edits, requested by the user on Cards 301 through 399, are interspersed between the major edits (the major edits are printed at intervals such that the minor edits fill a full page). Additionally, warning messages may be printed between the major edits, indicating the nature and times of non-fatal calculational difficulties.

Restart edits are annotated with a restart number; the message appears following the major edit data. An annotated sample major edit appears in **Figure 3.1-3**.

1. The major edit header region contains information regarding the progress of the calculation. Data described as "total" are from the beginning of the calculation; data described as "edit" are from the previous major edit. In the example shown, the calculation is running at the maximum (or requested) time step size; no time step reductions have occurred. The computer central processing unit time consumed up to this point is displayed. The Courant limit is displayed. The data on the right hand side are used to determine if cumulative mass error is significant. In the example, the ratio of mass error to problem mass is of the magnitude 10^{-7}; therefore, mass error is insignificant.

2. This region displays the current status of all trips. A value of -1.0 indicates the trip is currently false. Trips shown with positive values are currently true, and the value shown is the time when the trip last turned from false to true.

3. This region displays the current conditions of all hydrodynamic volumes. The data are displayed in four sections (3A, 3B, 3C, and 3D) and the volume identifier is shown at the left margin in each section. The fluid state is displayed in Section 3A. The column titled "pressure" is the total pressure; the partial pressure of steam is shown in the following column. The difference between the first two columns, if any, is the partial pressure of noncondensable gas. The next two columns, titled "voidf" and "voidg" display the liquid and vapor/gas fractions within the volume, respectively. These two columns add to unity. The terms "voidf" and "voidg" are inaccurate since the term "void" is actually only associated with vapor/gas. The next three columns display the temperatures of the liquid and vapor/gas phases and the saturation temperature at the volume pressure. The specific internal energies of the liquid and vapor/gas phases are next displayed. For easy reference, the final column shows the packed word (tlpbfve) control flags for the volume.

   Section 3B starts with a display of the liquid and vapor phase densities, the density of the fluid mixture, and the boron density in the volume. Next, the volume phase velocities and the volume sound speed are displayed. Note that the phase velocities are based on the volume flow area, which may be different from the junction flow areas. Finally, the mixing cup quality (equilibrium quality used in the wall heat transfer), static quality, and noncondensable quality are displayed. The mixing cup quality assumes any phasic nonequilibrium is removed. A negative mixing cup quality indicates subcooled liquid. Its magnitude is normalized to the latent heat of vaporization.

   Section 3C provides volume transport conditions and properties. The column titled "tot. ht. inp." is the total heat transfer rate into the volume fluid from heat structures. The column titled "vap. ht. inp." is the heat transfer rate from the heat structures to the vapor/gas phase. The difference between the first two columns is the heat transfer rate from the heat structures to the liquid phase. By convention, positive heat transfer is defined as being from the walls to the fluid. The column titled "vapor-gen." displays the total mass transfer rate. This rate is normalized to a unit volume basis. The total rate is the sum of the mass transfer rate from interphase mass transfer in the bulk for vaporization/condensation and interphase

RELAP5/3.2 Reactor Loss of Coolant Analysis Program

Example PWR model

MAJOR EDIT !!!time= 2.500000 sec

(1)

```
attemted adv:  tot=  500edit= 500        min.dt= 5.000000E-03 sec     last dt=  5.000000E-03 sec     ms.red= -0.207175 kg
repeated adv:  tot=    0edit=   0        max.dt= 5.000000E-03 sec     crnt.dt=  6.391199E-02 sec     tot.ms=   514348. kg
successful adv: tot  500 edit= 500       avg.dt=  5.000000E-03 sec    err. est= 1.504853E-07         m.rato= -4.027716E-07
requested adv. tot= 500 edit= 500        req.dt=  5.000000E-03 sec    cpu    =  68.6655      sec     time =   2.50000 sec
```

(2)

```
Trip number, trip time (sec)
  531  -1.000000      532  -1.000000      533  -1.000000      534  0.0000000e+00   535   1.50485E-07
```

System 1 *none* mass= 2.48875E+05 kg mass error= 1.33315E-02 kg err.est= 1.50485E-07

(3A)

Vol.no.	pressure (pa)	voidf	voidg	voidgo	tempf (K)	tempg (K)	sat. temp. (K)	uf (j/kg)	ug (j/kg)	volume flag
sg outle branch										
210-010000	1.52046E+07	1.0000	0.00000E+00	0.00000E+00	558.476	616.367	616.367	1.24008E+06	2.45695E+06	000000
rcsuctio pipe										
212-010000	1.51397E+07	1.0000	0.00000E+00	0.00000E+00	558.473	616.024	616.024	1.24018E+06	2.45652E+06	000000
212-020000	1.51493E+07	1.0000	0.00000E+00	0.00000E+00	558.483	616.021	616.021	1.24023E+06	2.45653E+06	000000
212-030000	1.51463E+07	1.0000	0.00000E+00	0.00000E+00	558.517	616.059	616.059	1.24039E+06	12.45636E+06	000000
212-040000	1.51452E+07	1.0000	0.00000E+00	0.00000E+00	558.536	616.053	616.053	1.2409E+06	2.45639E+06	000000
212-050000	1.51338E+07	1.0000	0.00000E+00	0.00000E+00	558.565	616.993	616.993	1.24066E+06	2.45666E+06	000000
a rcp pump										
rpm =	129.61	(rad/sec)	head =	7.01427E+05	(pa)	torque =	-35765.	(n-m)		
0ctant = 1						mtr. torque =	38504.	(n-m)		
214-010000	1.55228E+07	1.0000	0.00000E+00	0.00000E+00	558.816	618.033	618.033	1.24124E+06	2.44732E+06	011010
pumpdis1 snglvol										
216-010000	1.57892E+07	1.0000	0.00000E+00	0.00000E+00	558.917	619.405	619.405	1.24129E+06	2.44104E+06	000000
pumpdis1 branch										
218-010000	1.57872E+07	1.0000	0.00000E+00	0.00000E+00	558.924	619.396	619.396	1.24133E+06	2.44108E+06	000000

(3B)

Vol.no.	rhof (kg/m3)	rhog (kg/m3)	rho-mix (kg/m3)	rho-boron (kg/m3)	vel-liquid (m/sec)	vel-vapor (m/sec)	sounde (m/sec)	quality mix-cup	quality static	quality non-cond.
210-010000	754.72	98.823	754.72	0.00000E+00	1.7084	1.7168	1039.6	-0.363	0.000E+00	0.000E+00
212-010000	754.62	98.150	754.62	0.00000E+00	10.852	11.248	1039.2	-0.358	0.000E+00	0.000E+00
212-020000	754.60	98.145	754.60	0.00000E+00	11.438	12.082	1039.1	-0.358	0.000E+00	0.000E+00
212-030000	754.55	98.218	754.55	0.00000E+00	11.438	11.869	1039.1	-0.359	0.000E+00	0.000E+00
212-040000	754.52	98.206	754.52	0.00000E+00	11.438	11.548	1039.0	-0.359	0.000E+00	0.000E+00
212-050000	754.45	98.089	754.45	0.00000E+00	11.438	11.548	1038.8	-0.358	0.000E+00	0.000E+00
214-010000	754.59	102.18	754.59	0.00000E+00	1.3076	1.3213	1040.5	-0.382	0.000E+00	0.000E+00
216-010000	754.82	105.08	754.82	0.00000E+00	14.528	14.527	1042.0	-0.400	0.000E+00	0.000E+00

Figure 3.1-3 Sample major edit.

3C

Vol.no..	tot.ht.inp (watts)	vap.ht.inp. (watts)	vapor-gen. (kg/sec-m3)	wall-flashing (kg/sec-m3)	liq.int.htc (watts/m3-k)	vap.int.htc (watts/m3-k)	mass-flux (kg/sec-m2)	Reynolds liquid	Reynolds vapor	flow regi
210-010000	6309.9	0.00000E+00	0.00000E+00	0.00000E+00	0.00000E+00	3.34194E+07	1289.4	2.72379E+07	1.44539E-08	bby
212-010000	17248.	0.00000E+00	0.00000E+00	0.00000E+00	0.00000E+00	3.34194E+07	8189.8	6.86527E+07	3.74412E-08	bby
212-020000	9468.8	0.00000E+00	0.00000E+00	0.00000E+00	0.00000E+00	3.34194E+07	8631.6	7.04813E+07	3.90656E-08	bby
212-030000	21447.	0.00000E+00	0.00000E+00	0.00000E+00	0.00000E+00	3.34194E+07	8631.1	7.04847E+07	3.83767E-08	bby
212-040000	11419.	0.00000E+00	0.00000E+00	0.00000E+00	0.00000E+00	3.34194E+07	8630.6	7.04856E+07	3.73500E-08	bby
212-050000	15197.	0.00000E+00	0.00000E+00	0.00000E+00	0.00000E+00	3.34194E+07	8630.1	7.04902E+07	3.73473E-08	bby
214-010000	0.00000E+00	0.00000E+00	0.00000E+00	0.00000E+00	0.00000E+00	3.34194E+07	986.60	2.38285E+07	1.26257E-08	bby
216-010000	1490.3	0.00000E+00	0.00000E+00	0.00000E+00	0.00000E+00	3.34194E+07	10964.	7.94032E+07	4.25614E-08	bby
218-010000	972.80	0.00000E+00	0.00000E+00	0.00000E+00	0.00000E+00	3.34194E+07	10964.	7.94042E+07	4.31499E-08	bby

3D

Vol.no.	lrgst.mass err.		reduce-quality		reduce-extrap.		reduce-mass		reduce-propty.		reduce-courant	
	edit	total	edit	total	edit	total	edit	total	edit	total	edit	total
210-010000	0	0	0	0	0	0	0	0	0	0	0	0
212-010000	0	0	0	0	0	0	0	0	0	0	0	0
212-020000	0	0	0	0	0	0	0	0	0	0	0	0
212-030000	0	0	0	0	0	0	0	0	0	0	0	0
212-040000	0	0	0	0	0	0	0	0	0	0	0	0
212-050000	0	0	0	0	0	0	0	0	0	0	0	0
214-010000	0	0	0	0	0	0	0	0	0	0	0	0
216-010000	0	0	0	0	0	0	0	0	0	0	0	0
218-010000	0	0	0	0	0	0	0	0	0	0	0	0

System 1

Jun.no.	from vol.	to vol.	liq.j.vel. (m/sec)	vap.j.vel. (m/sec).	mass flow (kg/sec)	jun.area (m2)	throat ratio	junction flags	flow regi	no. last	advs. edit	choked total
sg outle branch												
210-010000	210-010002	212-010001	10.852	11.020	4203.3	0.51323	0.88698	0000100	bby	0	0	0
210-020000	208-080002	210-010001	5.6931	5.6931	4204.0	0.97827	1.00000	0000000	bby	0	0	0
rcsuctio pipe												
212-010000	212-010002	212-020001	11.438	12.082	4203.2	0.48695	1.00000	0000000	bby	0	0	0
212-020000	212-020002	212-030001	11.438	12.082	4203.0	0.48695	1.00000	0000000	bby	0	0	0
212-030000	212-030002	212-040001	11.438	11.657	4202.7	0.48695	1.00000	0000000	bby	0	0	0
212-040000	212-040002	212-050001	11.438	11.438	4202.6	0.48695	1.00000	0000000	bby	0	0	0
a rcp pump												
214-010000	212-010002	214-010001	11.439	11.657	4202.2	0.48695	1.00000	0000000	bby	0	0	0
2140200000	214-010002	216-010001	14.530	14.530	4201.4	0.38320	1.00000	0000000	ctb	0	0	0
pumpdis1 branch												
218-010000	216-010002	218-010001	14.525	14.525	4201.3	0.38320	1.00000	0000000	bby	0	0	0
218-020000	218-010002	220-010001	14.525	14.525	4201.3	0.38320	1.00000	0000000	bby	0	0	0
218-030000	921-010002	218-010001	-9.18118E-05	-9.18117E-05	-2.53728E-03	3.66131E-02	1.00000	0000000	bby	0	0	0

4A

Figure 3.1-3 Sample major edit. (Continued)

Jun.no.	voidfj	voidgj	fij (n-s2/m5)	fwalfj	fwalgj	fjunf	formfj	formgj	no. last	advs. edit	ccfl total	
210-010000	1.0000	0.00000E+00	2488.5	1.018E-02	0.000E+00	0.000E+00	0.665	0.66	0	0	0	4B
210-020000	1.0000	0.00000E+00	83.749	1.49	0.000E+00	0.000E+00	0.490	0.490	0	0	0	
212-010000	1.0000	0.00000E+00	3101.7	1.484E-02	5.300E-02	5.300E-02	0.000E+00	0.000E+00	0	0	0	
212-020000	1.0000	0.00000E+00	3703.9	2.071E-02	0.000E+00	0.000E+00	0.000E+00	0.000E+00	0	0	0	
212-030000	1.0000	0.00000E+00	110.61	2.388E-02	0.100	0.100	0.000E+00	0.000E+00	0	0	0	
214-010000	1.0000	0.00000E+00	75.2130	1.498E-02	0.000E+00	0.000E+00	0.000E+00	0.000E+00	0	0	0	
214-020000	1.0000	0.00000E+00	9.7379	9.504E-03	0.000E+00	0.000E+00	0.000E+00	0.000E+00	0	0	0	
218-010000	1.0000	0.00000E+00	18.200	2.273E-02	0.000E+00	0.000E+00	0.000E+00	0.000E+00	0	0	0	
218-020000	1.0000	0.00000E+00	18.198	2.645E-02	0.000E+00	0.000E+00	0.000E+00	0.000E+00	0	0	0	
218-030000	1.0000	0.00000E+00	18.198	1.686E+03	0.000E+00	0.000E+00	0.000E+00	0.000E+00	0	0	0	

HEAT STRUCTURE OUTPUT +++time= 2,50000 sec (5A)

str.no.	side	surface temp. (k)	heat-trf convection (watt)	heat-flux convection (watt/m2)	critical heat-flux (watt/m2)	CHF mul	ht mode	heat-trf coef.conv (watt/m2-k)	int.-heat source (watt)	conv+rad -source (watt)	vol.ave temp. (K)
2101-001	left	558.650	6309.9	931.73	0.00000E+00	0.00	2	5381.9	0.00000E+00	6309.9	558.69
	right	558.690	0.00000E+00	0.00000E+00	0.00000E+00	0.00	0	0.00000E+00			
2121-001	left	558.636	17248.	4611.1	0.00000E+00	0.00	2	28419.	0.00000E+00	17248.	558.66
	right	558.667	0.00000E+00	0.00000E+00	0.00000E+00	0.00	0	0.00000E+00			
2121-002	left	558.639	9468.8	4612.6	0.00000E+00	0.00	2	29795.	0.00000E+00	9468.8	558.66
	right	558.668	0.0000E+00	0.00000E+00	0.00000E+00	0.00	0	0.00000E+00			
2121-003	left	558.652	21447.	3993.6	0.00000E+00	0.00	2	29794.	0.00000E+00	21447.	558.67
	right	558.670	0.0000E+00	0.00000E+00	0.00000E+00	0.00	0	0.00000E+00			
2121-004	left	558.670	11419.	3583.6	0.00000E+00	0.00	2	29794.	0.00000E+00	11419.	558.67
	right	558.657	0.0000E+00	0.00000E+00	0.00000E+00	0.00	0	0.00000E+00			
2121-005	left	558.661	15197.	2829.7	0.00000E+00	0.00	2	29794.	0.00000E+00	15197.	558.66
	right	558.666	0.0000E+00	0.00000E+00	0.00000E+00	0.00	0	0.00000E+00			

At time= 2.50000 sec (5B)

str.no	temperatures	(K)			
2101-001	558.65	558.69	558.69	558.69	558.69
2121-001	558.64	558.67	558.67		
2121-002	558.64	558.67	558.67		
2121-003	558.65	558.67	558.67		
2121-004	558.66	558.67	558.67		
2121-004	558.66	558.67	558.67		
2121-005	558.66	558.67	558.67		

34	step bia	mult	0.00000E+00	49	rcp m er	sum	300.494	6
50	rcp spee	intergral	1237.70	60	core dt	-su -	60.1754-	

-----Restart no. 500 written, block no,. 1-- (7)

Figure 3.1-3 Sample major edit. (Continued)

mass transfer near the wall for vaporization/condensation. The following column, titled "wall-flashing," shows the mass transfer rate from interphase mass transfer near the wall for vaporization. The liquid- and vapor-side heat transfer coefficients are displayed in the following columns. Bulk interphase heat transfer employs the concept of a saturated interface and these coefficients represent the paths from the phases to the interface. For reference, the volume mass flux, phasic Reynolds Numbers, and flow regime are shown in the remaining columns. The flow regime is indicated by an acronym: bby = bubbly, hst = horizontal stratified, anm = annular-mist, slg = slug, ian = inverted annular, isl = inverted slug, etc. (see Volume II, Section 2.1).

The data in Section 3D provide an indication of the causes and model regions limiting calculation progress. The data shown indicate, both on a total basis and for the edit, the volume with the largest mass error and the volume controlling the Courant limit. The columns labeled "reduce-" show the number of occurrences where the volume has resulted in time step reduction. For perspective, the number of occurrences should be compared with the "edit" and "total" number of successful advancements shown in Section 1.

4. Section 4 displays the hydrodynamic state of the junctions. The junction identifier appears in the left hand column of Section 4A followed, for reference, by identifiers of the volumes the junction connects. Next, the phasic velocities and mass flow rates are displayed. For reference, the junction flow area, throat ratio, and junction control flags (packed word jefvcahs) are shown. Depending on the junction options selected, the junction area displayed may not be that specified in the model input and used by the code. The true junction area, which may vary in time (e.g., at a valve junction), is the product of the junction area and throat ratio.

   The final three columns in Section 4A indicate the current status and history of choking at the junction. In the column titled "last," a value of 0 indicates an unchoked condition and a value of 1 indicates a choked condition on the last time step. In the next two columns, the number of choking occurrences since the last major edit and from the beginning of the calculation are shown. For perspective, the number of occurrences should be compared with the "edit" and "total" number of successful advancements shown in Section 1.

   In Section 4B, the junction liquid and vapor fractions are shown (see discussion in note 3 above). The following 7 columns, with titles beginning with "f" present data describing the components of junction friction pressure drop. The column titled "fij" represents the interphase drag. The columns titled "fwalfj" and "fwalgj" represent the wall drag components on the liquid and vapor/gas phases. The wall drag is based on flow between the adjacent volume cell centers through the junction. The columns titled "fjunf" and "fjunr" represent the phasic losses from user-input flow loss coefficients. The columns titled "formfj" and "formgj" represent the phasic losses from code-calculated flow losses (such as abrupt area change effects). The last three columns in Section 4B describe the current status and history of the operation of the countercurrent flow limiting model (the displayed information is comparable to that shown for the choking model described above).

5. Sections 5A and 5B show the current status of the model heat structures. Section 5A starts with the heat structure geometry number; the hydrodynamic volume connections are shown for the left and right sides for reference. If a boundary volume of 0-000000 is shown, the surface is adiabatic. The following columns show the surface temperatures, heat transfer rates, and heat fluxes. The next column shows the critical heat fluxes. Depending on the current status of the heat structure, actual critical heat flux data may not be printed. Critical heat flux is not calculated (and a 0.00000 is printed) if no boiling is present, such as in single-phase forced convection. If a user-specified critical heat flux multiplier has been used, it appears for reference in the next column. The following column shows the heat transfer mode number; the user is referred to Section 4 of Volume IV of the code manual for the correlation of heat transfer modes and numbers. The next column shows the heat transfer coefficient. This coefficient is consistent with the fluid temperatures, heat structure surface temperature, heat flux, heat transfer rate, and heat transfer area for each surface of the structure. If an internal heat source is used, such as for a fuel rod, its magnitude is displayed in the following column. The column titled "conv+rad-source" represents the total heat balance on the structure. The final column shows the volume average temperature of the heat structure. Section 5B shows the current node temperatures for each structure. The first temperature is for the left surface; the last temperature is for the right surface.

6. Section 6 shows the current values of all control variables. The control variable number, its descriptive name, its type, and the current value are displayed.

7. If the major edit is also a restart edit, then Section 7 is printed. The restart number shown here is the one required on the 103 control Card for a restart run. The block number is not used and plot point frequency should be changed as the problem proceeds from one phase to the next. Frequent points should be selected during problem phases where rapid changes in parameters are expected. For economy, less frequent points should be selected during phases where quiescent conditions are expected.

3.1.4.2 The Restart-Plot File. The restart-plot file contains virtually all calculation parameters (pressures, temperatures, void fractions, flow rates, etc.) for the entire transient calculation.

A common misconception is that a parameter needs to be specified using a minor edit request in order to be available in the output when the calculation is complete. A minor edit request affects only the printed output. It is not necessary to specify all the parameters needed for output in advance; this determination may be made after the calculation has been completed. The output file may be accessed repeatedly as new data needs arise. However, during a calculation, data are written to the restart-plot file only at the minor edit frequency. Once a calculation has been performed, it is not possible to recover the data between the data points written to the file. Therefore, it is important to select a minor edit frequency that will provide plot points at an interval appropriate for the problem being solved. In practice, the minor edit (and plot point) frequency should be changed during the calculation as the problem proceeds from one phase to the next. Frequent points should be selected during the problem phases where rapid changes in parameters are expected. For economy, less frequent points should be selected during phases where quiescent conditions are expected.

Calculations typically are accomplished using multiple restarts. (See Volume II for restart input requirements.) For example, a new problem is run from 0 to 10 seconds. This early portion is analyzed and rerun from time zero as errors are corrected. When a successful calculation to 10 seconds has been made, a restart run is made (e.g., from 10 to 30 seconds), and so on. RELAP5-3D© provides the flexibility to change virtually any feature of the model at any restart point. When model changes are incorporated on restart, the restart-plot file reflects those changes only after the point in the calculation where they were implemented. In the above example, if an injection system is added to the model at 10 seconds, then data for the added components exists only for times after 10 seconds. Model additions, deletions, and changes are permanently implemented. If a model change is made at 10 seconds, the revised model remains in effect unless further modifications are made at subsequent restart points.

When a calculation has been completed, the restart-plot file becomes a valuable record of the calculation. If lost, replacing it would require reperforming the calculation, generally at considerable expense. At any later date, the file may be accessed and previously unaccessed data may be obtained as needed to extend analysis. Therefore, it is recommended that the restart-plot files of important calculations be protected securely and permanently.

3.2 Calculational Node and Mesh Sizes

This section provides guidance for selecting the nodal sizes of hydrodynamic cells and the mesh sizes of heat structures.

For economic reasons, the numbers of hydrodynamic cells and heat structure mesh points in general should be minimized. The computer run time needed to execute a problem simulation is determined almost completely by the number of hydrodynamic cells in the model. The number of heat structures generally increases in tandem with the number of cells. Therefore, a major economic benefit is gained by limiting the number of hydrodynamic cells in a model. Some additional economic benefit may be obtained by minimizing the number of mesh points within the heat structures. Limiting the number of other model features (such as trips and control variables) provides only minimal economic benefits.

There is an additional motivation for employing the largest calculational cells possible. When small cells are used, the time step size is reduced as a result of the material Courant limit. The Courant limit, discussed in Section 3.1, limits the calculational time step based on the ratio of cell length to fluid velocity. Also, see Section 2.2.2.2.

The process of minimizing model size must, however, always consider the phenomena to be modeled; minimizing must not proceed past the point where important phenomena are excluded from the simulation. This consideration is complicated, however, because the importance of phenomena varies from one region of the model to another and is strongly affected by the transient to be simulated. For example, the important model regions and simulation phenomena for small and large break loss-of-coolant accidents are dramatically different; therefore, appropriate modeling for these two sequences varies dramatically.

In summary, the modeler should select the minimum number of hydrodynamic cells and heat structure mesh points needed to calculate the important phenomena for the simulated transient. This guidance suggests that a general model (i.e., one that is to be used to simulate many different types of transients) should contain sufficient noding detail for all phenomena anticipated. If the important phenomena are uncertain, a detailed noding scheme should be employed. Conversely, if the important phenomena are well known, nodalization of the noncritical model regions may be simplified. If sufficient time and funds are available, it is recommended that a general model of a reactor system be assembled first. Analysis using the general model will then provide the information needed to determine what model simplifications are appropriate. The following sections provide additional guidance concerning hydrodynamic cell and heat structure sizing. General suggestions for appropriate noding may be inferred from the example problem applications in Section 5.

3.2.1 Hydrodynamic Cell Size

As discussed above, large hydrodynamic cell sizes should be used for economic reasons. However, in each region of the model, the detail of the calculational cells must be sufficient to allow the simulation of important regional thermal-hydraulic phenomena. As a starting point, cell lengths of 1 to 3 m (3 to 10 ft) are recommended in phenomena-dominating regions (e.g., reactor vessel, pressurizer, and steam generator) of a light-water reactor model. Cells of much longer lengths are appropriate in less important regions of the model (e.g., the feedwater train and steam lines). Example models, with nodalization schemes that have evolved over years of experience, are provided in Section 5. The cell sizes presented in these applications may be taken as guideline recommendations for modeling light-water reactors. For totally new applications or where the calculation results may be particularly sensitive to the model discretization, a convergence study is recommended to ensure that a proposed nodal layout is adequate.

Good modeling practice includes blending the transition from regions of small cells to regions of large cells. For this blending, it is recommended that the volumes of adjacent cells not differ by more than an order of magnitude.

Other considerations affecting cell size selection are the locations of natural boundaries, flow connections, and instruments within the prototype fluid system. Good modeling practice includes placing junctions at natural fluid system boundaries and at flow loss features (such as support plates, grid spacers, bends, and orifices). Using this practice, the flow loss is placed at the proper location with respect to the fluid volumes. For similar reasons, the placement of junctions at flow connection points is a good practice. Cell size selection should also consider placing model features at prototypical instrument locations (e.g., placing a cell center at the location of a pressure tap or a junction at the location of a flow meter). This practice facilitates the use of the code output because the calculated and measured data are directly comparable without further effort.

When comparing the code to data for co-current flow using a few volumes, whose centers are placed at the location of the data measurements (course nodalization) to represent a heated test section, a noticably higher volume void fraction is obtained as compared to the case of using many volumes (fine nodalization) to represent the heated test section. For the course nodalization case, it is recommended that the volume

exit junction is a better placement for the calculated void fraction than the volume center location. This is because the code's calculation procedure is to compute the void fraction in a volume (at the volume center) based on the total energy transfered to the volume fluid from the wall (includes the full length of the volume).

3.2.2 Heat Structure Mesh Size

As stated above, the computer run time of a model may be improved if the number of heat structure mesh points is limited. The minimization process involves a trade-off between the number of mesh points and the calculation error. The fewest number of mesh points, consistent with acceptable calculational error, should be used.

To demonstrate this trade-off, consider the simple cylindrical heat structure portrayed in **Figure 3.2-1**. The inner surface includes a convective boundary condition of fluid, the outer surface is insulated. The code-calculated heat transfer to the fluid is an approximation based on a finite-difference conduction solution within the heat structure and an assumed heat transfer coefficient on the inner surface. The heat transfer coefficient is based on the calculated heat transfer regime and may involve considerable uncertainty (perhaps 50%). The question to answer is this: "How many heat structure mesh points are needed so that the conduction solution error is acceptably small in the context of the overall uncertainty?" The error in the conduction solution will be a function of the speed and magnitude of the thermal transient. Rapid transients involving large temperature changes will result in the largest errors. The conduction solution error may therefore be bounded by evaluating the effects of an instantaneous change in the inside surface temperature by the largest anticipated temperature change. This evaluation may be facilitated by using a simple RELAP5-3D© model of a representative heat structure and performing a meshing sensitivity study.

In practice, the effort required to perform the above trade-off is justified only when the temperature solution within a heat structure is of particular significance to the problem. Instead, the number of heat structure mesh points is typically selected by convention (some of which were developed by undocumented convergence studies such as described above). These conventions prescribe the use of 2 to 12 mesh points. Recommended numbers of mesh points include 2 for steam generator tubes, 4 for passive heat structures such as pipe walls, and 12 for fuel rods. For a new application, it is recommended that 6 mesh points be used as a starting point for analysis. RELAP5-3D© requires that a mesh point be placed at the interface between two heat structure compositions (such as between a stainless steel clad and carbon steel pipe). Within each composition, mesh points are typically distributed at even intervals with a higher density of mesh points used within thermally thick regions or where needed for resolution of heat source distribution within the thickness of the composition.

A special recommendation is made for the gas gap region within a fuel rod. To avoid calculational difficulties (i.e., oscillations) resulting from the very low gas gap thermal capacity, it is recommended that no heat structure mesh points be placed within the gap region (i.e., between the mesh point on the outer surface of the fuel pellet and the inner surface of the clad).

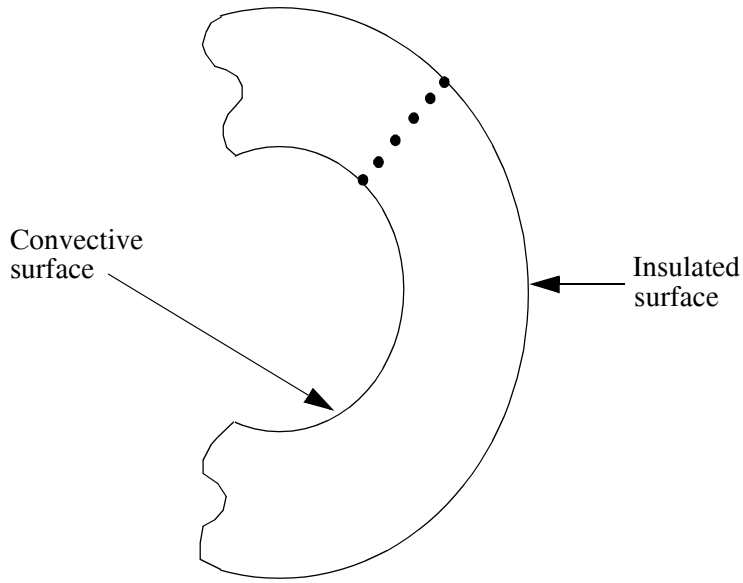

Figure 3.2-1 Heat structure noding.

The user should avoid the temptation to economize by reducing the number of heat structures. Reducing heat structures may lead to significant misrepresentations in the computer model. Furthermore, if the user develops the hydrodynamic portions of a model first, the heat structure models may be developed only as an afterthought. With this process, the heat structures involving the plant energy balance (e.g., fuel rods and steam generator tubes) are included in the model; however, passive heat structures (e.g., piping walls) often are neglected. Ignoring passive heat structures is a common modeling error. Their metal heat capacity is a large fraction of the fluid heat capacity in a plant. It is highly recommended that the hydrodynamic and heat structure input associated with each calculational cell be developed at the same time. In this way, the importance of heat structures to the overall problem may be considered concurrently with the hydrodynamics, a much more satisfactory model development approach.

The mesh point intervals (i.e., the distance between adjacent mesh points) that determine the relative size of the computational nodes within a heat structure can have a significant impact on the accuracy of the transient conduction solution and thus the energy exchage between the fluid and the wall (See Section 4.2 of Volume I for the layout of mesh points, mesh intervals, and computational nodes in RELAP5-3D©). Since the performance of different mesh layout strategies is a strong function of the Biot number, an analyst should consider what heat transfer mechanisms (i.e., convection, boiling, and/or condensation) will occur for any given heat structure. The Biot number (Bi) represents the ratio of convective and conductive heat transfer and is given by

$$Bi = \frac{hL}{k} \tag{3.2-1}$$

where h is the convective heat transfer coefficient, L is the thickness of the wall, and k is the thermal conductivity of the wall material. A relatively high Biot number, such as might occur for boiling and condensation, results is a situation in which the rate of heat transfered into or out of the wall is "conduction limited". In such a situation, a mesh point spacing that is to coarse (i.e., computational nodes too large) will overstate the energy exchange between the wall and the fluid. Based on the calculated Biot number, the following guidelines are recommended[3.2-1].

Variable Mesh Point Intervals

For expected Biot numbers larger that 15, graduated or spatially variable mesh point intervals should be used, with smaller mesh point intervals near the surface in contact with the fluid. The use of such a nodalization allows for an accurate calculation of the temperature gradients.

Minimum Mesh Point Interval

Since the Biot number has a significant impact on the maximum allowable computational node size, a relationship between the two is desired. To determine this relationship, the largest acceptable relative node size (β_{max}) for the surface node ($\beta = \frac{1}{2}\delta_1/L$, $\frac{1}{2}\delta_1$ = one half of the first mesh interval size, L = wall thickness) was plotted for each Biot number in **Figure 3.2.2**. The best relationship was found to be between the inverse of β_{max} and the Biot number. The β_{max} values were determined by calculating the fraction of the wall for the surface node for the coursest mesh which met the accuracy criteria for each case. This fractional volume represents all of the wall that is between the surface mesh point and one-half of the distance to the first interior mesh point (See Section 4.2 of Volume I for the layout of the mesh points, the mesh point intervals, and the heat conduction computational nodes, particularly the surface nodes).

The line in **Figure 3.2.2** represents the recommended maximum relative surface node size. Since only three different mesh point intervals were examined in a recent study[3.2-1], the resolution is coarse. Only the data points at Biot numbers of 5, 50, and 100 were used to determine the equation for the line representing the recommended surface node size. The other data points were omitted since for each case there was a larger Biot number for which the allowed β_{max} was the same. The equation for the recommended maximum surface node size is given by

$$\frac{1}{\beta_{max}} = 0.338\mathrm{Bi} + 5.2 \qquad (3.2\text{-}2)$$

It is interesting to compare this recommendation to a lumped capacitance model. For very low Biot numbers (i.e., < 0.1) the lumped parameter model which only uses one characteristic temperature for the wall is appropriate. Using the recommended guidelines the appropriate β_{max} for the case of a Biot number of zero is 0.19. A uniform mesh with three heat structure mesh points results in a β of 0.25 for the surface

.

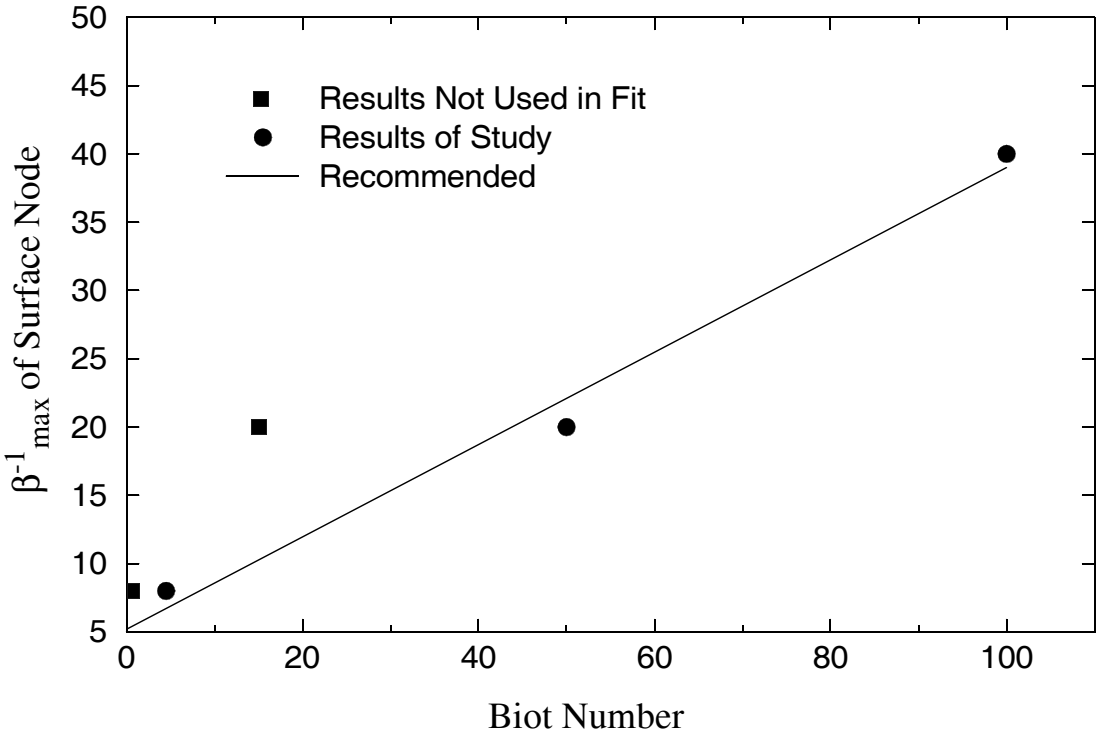

Figure 3.2-2 Effect of Biot number on suggested surface node size.

node, which is only slightly larger than the recommended value. Therefore at very low Biot numbers these guidelines would recommend three mesh points as opposed to the one required in the lumped capacitance model.

3.2.3 References

3.2-1. Aumiller, D. L., "The Effect of Nodalization on the Accuracy of the Finite-Difference Solution of the Transient Conduction Equation," 2000 RELAP5 International Users Seminar, Jackson Hole, WY, September 12-14, 2000.

3.3 General Option Selection

Guidelines for the selection of options common to all components are presented in this section. Guidelines for option selection applicable to a specific component (e.g., valves or pumps) appear in Section 4. The following subsections present general guidelines for selecting volume options, junction options, initial conditions, and boundary conditions.

3.3.1 Volume-Related Options

The volume-related options are selected by the volume control flags that are required input for each hydrodynamic volume. The volume control flags are input as a packed word of the format ''tlpvbfe''. The default options, obtained by entering 0000000, are generally recommended for use.

The t flag specifies whether the thermal stratification model is operative. The thermal stratification model can only be applied to vertically oriented components. The t = 0 option indicates it is not to be used, and t = 1 indicates it is to be used. It is recommended that the t = 1 option be used in vertical tanks where a sharp temperature profile is desired (hot liquid over cold liquid). The t = 1 option should not be used for vertical components with active heat input, such as a reactor core or a steam generator secondary boiler.

The l flag specifies whether the level model is operative. The level model can only be applied to vertically oriented components. The l = 0 option indicates the level model is not to be used, and l = 1 indicates it is to be used. It is recommended that the l = 1 option be used in vertical pipes and tanks where a sharp level is desired (vapor/gas over liquid).

The p flag specifies whether the water packing scheme is operative. The water packing scheme is only applied to vertically oriented components. The p = 0 option indicates water packing is to be used, and p = 1 indicates it is not to be used. It is recommended that the p = 0 option generally be used. The p = 1 option is reserved for situations where calculational difficulties are caused by repeated water packing occurrences. For TMDPVOL, SEPARATR, JETMIXER, TURBINE, PUMP, and ACCUM components, the p flag is not used and 0 should be entered.

The v flag specifies whether the vertical stratification model is to be used. The vertical stratification model is only applied to vertically oriented components. The v = 0 option indicates the vertical stratification model is to be used, and v = 1 indicates it is not to be used. It is recommended that the v = 0 option generally be used. The v = 1 option is reserved for situations where the calculated vertical stratification behavior is not desired. For TMDPVOL, SEPARATR, JETMIXER, ECCMIX, TURBINE, PUMP, and ACCUM components, the v flag is not used and 0 should be entered.

The b flag specifies the interphase friction model to be used. The b = 1 option and the b = 2 option are only applied to vertically oriented components. The b = 0 option indicates that the normal pipe interphase friction model is to be used. The b = 1 option indicates that the rod bundle interphase friction model is to be used. The b = 2 option indicates that the ORNL ANS narrow channel interphase friction model is to be used. The b = 0 option is generally recommended. For model regions with bundle geometries, such as steam generator secondary boiler regions and reactor core regions, the b = 1 option is recommended. For SEPARATR, JETMIXER, ECCMIX, TURBINE, PUMP, and ACCUM components, the b flag is not used and 0 should be entered.

The f flag indicates if wall friction is to be calculated. The f = 0 option specifies that wall friction is to be calculated, and the f = 1 flag indicates wall friction is not to be calculated. The f = 0 option is generally recommended. The f = 1 option is reserved for special situations where wall friction is

undesirable. This situation might arise when a simplified model is constructed of a complex fluid region. In such situations, the input cell length (or that implied from volume and area) may be much longer than is prototypical. The f = 1 option could be used in this case to eliminate the excessive wall friction resulting from the long apparent cell length. For SEPARATR and PUMP components, the f flag is automatically set to 1, regardless of the value set by the user.

The e flag indicates whether phasic nonequilibrium or equilibrium options are to be used. In this terminology, "nonequilibrium" implies that the liquid and vapor phases may be at different temperatures. Conversely, "equilibrium" implies that the phases are constrained to be at the same temperature. The e = 0 flag indicates nonequilibrium assumptions are to be used; e = 1 indicates equilibrium assumptions are to be used. The e = 0 option is generally recommended. The e = 1 option is reserved for special situations where the nonequilibrium assumption causes difficulty in obtaining a reasonable solution because of insufficient thermal mixing between the phases. An example of the equilibrium option aiding a simulation is the downcomer of a once-through steam generator. Insufficient interphase condensation may prevent flow of sufficient steam through the aspirator; changing to the equilibrium option may enhance the condensation and improve the aspirator flow. Another example is the upper pressurizer dome region when spray is operating and the pressurizer level is high. In this situation, insufficient interphase condensation may be calculated and changing to the equilibrium option may improve the simulation. For ACCUM components, the e flag must be set to 0.

3.3.2 Junction-Related Options

The junction-related options are selected by the junction control flags that are required input for all junctions except time-dependent junctions. The junction control flags are input as a packed word of the format "jefvcahs."

The j flag specifies whether the jet junction flag is applied. This flag is recommended at junctions where subcooled liquid is injected into the bottom of a pool. The j = 0 indicates the jet junction is not to be used; j = 1 indicates it is to be used.

The e flag specifies whether the energy correction option is operative. The e = 0 option indicates the energy correction option is not to be used; e = 1 indicates it is to be used. It is recommended that the e = 1 option be used at those junctions where large expansions occur or in those models that incorporate a combination of low-pressure systems (i.e., reactor containment system) with the primary system in a reactor plant.

The f flag specifies whether the countercurrent flow limiting (CCFL) model is operative. The f = 0 option indicates the CCFL model is not to be used; f = 1 indicates it is to be used. It is recommended that the f = 0 option be generally used and the f = 1 option be reserved for situations where CCFL phenomena are expected. For junctions associated with SEPARATR, JETMIXER, ECCMIX, TURBINE, and ACCUM components, the f flag is not used and 0 should be input.

The v flag is used to invoke the stratification vapor/gas pullthrough/liquid entrainment model for horizontal or vertical volumes. For a horizontal volume, this flag allows the user to specify a junction connected at a pipe centerline, or on the top or bottom of a pipe. For a vertical volume, this flag allows the user to specify a junction connected to the side of the volume. The v = 0 flag deactivates the model. The v = 1 flag indicates an "upward oriented" junction (i.e., a junction on the top of the main horizontal volume, which must be connected to a vertical offtake volume), and the v = 2 flag indicates a "downward oriented" junction (i.e., on the bottom of the main horizontal volume, which must be connected to a vertical offtake volume). The v = 3 flag indicates a side connected junction to a horizontal or vertical volume. Whenever a volume is in the horizontal stratified flow regime, the v = 1 and v = 2 options allow the adjacent junctions to pass only vapor/gas from an upward oriented junction and only liquid from a downward oriented junction.

The c flag indicates whether the choking (critical flow) model is applied at the junction. The c = 0 flag indicates choking is active; the c = 1 flag indicates it is not active. See Section 4.6.3 for further discussion.

The a flag indicates the operative area change option. The a = 0 flag indicates the smooth area change model is to be used; a = 1 indicates the full abrupt area change model (K_{loss}, area apportioning branch, restricted junction area, and extra interphase drag) is to be used; a = 2 indicates the partial abrupt area change model (no K_{loss}, but includes area apportioning at branch, restricted junction area, and extra interphase drag). For each junction, the user should consider the geometry of the fluid region to be modeled. In the absence of sharp edged area changes, it is generally recommended that the a = 0 or a = 2 options be used. For junctions involving a sharp edge area change the a = 1 option is recommended. For motor or servo valve components, the a = 0, a = 1, or a = 2 option may be used. However, if the a = 0 option is used, a valve C_v table must be input; if the table is not input, the a = 1 or a = 2 option must be used. For all other types of VALVE components, the a = 1 or a = 2 options must be used. The abrupt area change model, option a = 1, determines an appropriate junction flow loss based on the flow areas of the junction and adjacent volumes and is suitable for modeling geometries such as pipe-to-plenum, plenum-to-pipe, and orifices. The abrupt area change, option a = 1, flow loss is calculated internally by the code and is additive to any user-input flow loss for the junction. This additive property allows the user to combine the code-calculated area change loss from option a = 1 with other losses, such as bend losses, at any junction.

The h flag indicates the phasic velocity assumption to be used at a junction. The h = 0 flag (the recommended option) specifies a nonhomogeneous assumption. With this option, the two-velocity momentum equations are solved and different vapor/gas and liquid phase velocities are calculated. The h = 1 or 2 flag indicates a homogeneous assumption; the vapor and liquid phase velocities are constrained to be the same.

The s flag is used to specify momentum flow options. The s = 0 option specifies momentum flux is to be used for the *to* cell and the *from* cell. The s = 1 option specifies momentum flux is to be used for the *from* cell, but not the *to* cell. The s = 2 option specifies momentum flux is to be used for the *to* cell, but not the *from* cell. The s = 3 option specifies momentum flux is not to be used in either the *to* cell, or the *from*

cell. This option can be used to turn off momentum flux for most junctions. The previous crossflow model automatically turned off the momentum flux for crossflow junctions.

3.3.3 Initial Condition Options

The user is required to specify initial conditions for hydrodynamic volume fluid states, hydrodynamic junction flows, heat structure nodal temperatures, and control variable states. In addition, the user has the option to specify the initial status of trips. Guidelines for each of these specifications are discussed separately in the following sections.

The user should carefully consider whether a large effort is needed to specify exact initial conditions for hydrodynamic features. In most cases, this effort is not required and can prove counterproductive in some cases. When building a new model, it is suggested that only very crude initial conditions be specified and the code be used to calculate the steady initial conditions needed as a starting point for transient calculations. For example, all initial fluid temperatures might be set to the cold leg temperature, all initial pressures set to the cold leg pressure, all initial velocities set to zero, and all heat structures and control variables allowed to initialize themselves. The model is then brought up to the desired steady conditions by gradually introducing the fluid flow and heat addition boundary conditions. This simple initialization process is much more economic than attempting to specify exact initial conditions for each model feature.

3.3.3.1 Volume Fluid State Initialization. The initial hydrodynamic volume fluid state is specified using the fluid state control word. This is a packed word with format "εbt." The ε option specifies the fluid, the b option specifies whether boron is present, and the t option specifies the manner in which the two to five remaining input words are interpreted by the code.

It is recommended that the fluid be specified for each fluid system using either the default assumption (light water) or the 120 through 129 series of fluid system control cards (see Section 4.1) rather than using the ε option for each cell individually. Therefore, it is generally recommended that either $\varepsilon = 0$ be employed or, equivalently, the ε digit omitted.

Options using t = 0 through t = 3 specify a single-component fluid (as indicated by the ε option, the fluid system cards, or by default), while options 4, 5, 6, or 8 specify a two-component condition (vapor/liquid and noncondensable gas). Using options 0 and 6, considerable effort is needed to develop the input needed. It is suggested that the user avoid these options when possible. If option 6 is selected, but noncondensable quality is 0.0, the coding uses option 0. Option 8 is easier to use that option 6, however option 8 is a recent addition with limited user experience. If option 8 is selected, but noncondensable quality is 0.0, the coding used is similar to option 0 except that the input phasic temperatures are used instead of the phasic specific internal energies. For PWR and BWR applications, options 2 (pressure and static quality in equilibrium condition) and 3 (pressure and temperature in equilibrium condition) facilitate fluid state specification in all regions of the reactor coolant system. Option 2 is recommended for steam regions (e.g., steam lines and steam domes) and two-phase regions (e.g., pressurizer level interface, boilers, and BWR cores). Option 3 is recommended for subcooled liquid regions (e.g., cold legs, hot legs, and PWR cores). Option 4, with static quality = 1.0, is recommended for containment volumes.

To include either boron or noncondensable gas capability, it is not necessary to identify the capability in every cell of the fluid system (by specifying b = 1 for boron or t = 4, 5, 6, or 8 for noncondensable gas). Boron concentrations and noncondensable gas qualities only need to be specified in cells where they are initially nonzero. If present in any cell of a fluid system, boron and noncondensable gas migration is automatically tracked by the code throughout all cells of the system.

3.3.3.2 Junction Flow Initialization. The initial hydrodynamic junction flow condition is indicated by the control word (0 = velocities specified and 1 = mass flow rates specified). Using either option, velocities or mass flow rates for both the liquid and vapor/gas phase are input. As indicated in Volume II, the user must also input a zero interface velocity; this input velocity is not currently used by the code. The choice of entering velocities or mass flow rates is usually determined by convenience and by availability of information.

A common user error is to mis-specify a junction initial condition, which causes an unintended step change in the code calculation. Often, this error results in a thermodynamic property failure shortly after the calculation is initiated. To avoid difficulty, the user should ensure that each junction initial condition specified is consistent with the fluid state of the upstream cell and with the initial conditions of the upstream junctions.

3.3.3.3 Heat Structure Initialization. The initial heat structure state is specified by the steady-state initialization flag (Word 4 on the first input card of each heat structure). If a 0 flag is used, the initial heat structure node temperatures are set to those input by the user. If a 1 flag is used, the initial heat structure node temperatures are calculated by the code based on steady heat transfer considerations and the initial fluid conditions of the adjacent hydrodynamic cells. Note that the user must input the required number of initial temperatures, even though they are not used when the 1 flag is used. In general, for new models it is recommended that the 1 flag be used. The choice of the heat structure initialization flag is particularly important if heat structures are reinput on restart during the course of a transient calculation. The user should be aware that in this situation, the 0 flag should be used to specify the node temperatures. A common error is to have the 1 flag set, resulting in a step change in heat structure temperatures at the restart time.

3.3.3.4 Control Variable Initialization. Control variable initialization is determined by the initial value flag (Word 5 on the first card of each control variable input). If the 0 flag is used, the initial value specified in Word 4 is used as the initial condition. If the 1 flag is used, the initial condition is computed based on the control variable format and the initial values of any referenced parameters.

The user is cautioned that control variable references to thermohydraulic parameters are always evaluated in International System of Units (SI) units, even when British units are specified using the problem control option. Another caution regards the sequence used to evaluate control variables. Control variables are evaluated last (i.e., following hydrodynamics, heat structures, and trips) and in numerical order. It is not possible to recommend the general use of a 0 or 1 control variable initialization flag. The user should determine which option is most appropriate for each control variable.

3.3.3.5 Trip Initialization. The capability, but not the requirement, to specify an initial trip status is available for both variable and logical trips. This specification is made using the TIMEOF quantity

(Word 8 on variable trip statements and Word 5 on logical trip statements). If a false initial condition is desired, -1 is entered. If a true initial condition is desired, a non-negative floating point time is entered. For most new and restart problems, it is recommended that the true initial condition be attained by entering 0. For restart problems, a positive TIMEOF quantity provides a mechanism for specifying a "last turned true" time before the restart time. This capability allows the trip history to be retained when a trip is reinput on restart.

3.3.4 Boundary Condition Options

It is essential that appropriate boundaries for a model be determined early in the modeling process. Proceeding without this consideration is a significant modeling error that may lead to incorrect analysis conclusions. The appropriate model boundaries are those for which all external influences may be condensed into a known set of conditions at the boundary locations. This consideration often involves engineering judgments. A large boundary condition uncertainty is acceptable if its effect on the modeled processes is small; however, a small boundary condition uncertainty is unacceptable if its effect on the modeled processes is large.

Depending on boundary condition assumptions, models are often categorized as "separate effects" or "systems effects" models. The difference is the extent of model reliance on boundary assumptions. An example of boundary conditions for a separate effects model is shown in **Figure 3.3-1**. The model represents a PWR core region and is intended to investigate reflood phenomena. The boundary conditions specified include the inlet liquid temperature, the inlet liquid velocity, the outlet pressure, and the core power. In combination, these assumptions are highly uncertain because they likely either assume constant pressure, velocity, and temperature, or assume knowledge of how these parameters vary with core response. Despite the uncertainties, the separate effects model is valuable because it facilitates study of localized model performance and nodalization sensitivities.

The simplified PWR diagram shown in **Figure 3.3-2** provides an example of system model boundary conditions. Fluid pressure boundary conditions are applied for the outlets of the pressurizer, steam generator safety valves, and power-operated relief valves (PORVs), and for the turbine. Fluid temperature boundary conditions are applied for the safety injection, makeup, and main and auxiliary feedwater systems. Fluid flow boundary conditions are applied for the safety injection (high-pressure and low-pressure injection), makeup, main and auxiliary feedwater systems, and for the main coolant system recirculation (by way of pump speed control). Heat source boundary conditions are applied for the core power and pressurizer heaters. In addition, adiabatic surface boundary conditions are typically assumed on the exterior of insulated piping. Compared to the separate effects model described above, the systems effects model boundary condition assumptions clearly are more certain because they include measured or atmospheric pressures, measured temperatures, and measured flow rates.

Discussions regarding the application of fluid state, fluid flow, and heat transfer boundary conditions are presented below.

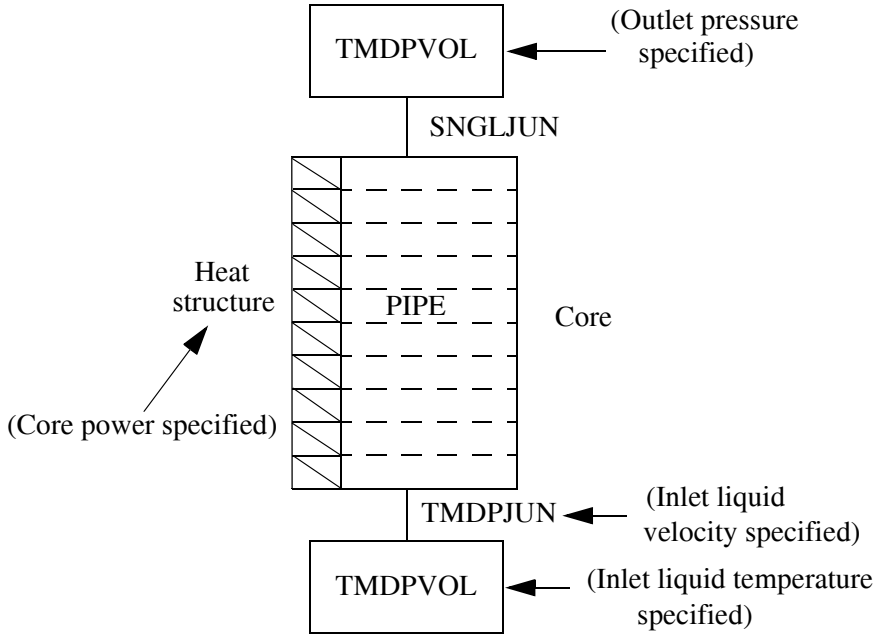

Figure 3.3-1 Example of separate effects core model.

3.3.4.1 Fluid State Boundary Conditions. A fluid state boundary condition (pressure, temperature, quality, or void fraction) is implemented with a time-dependent volume (TMDPVOL) component. This name is inaccurate; originally, fluid conditions could be specified only as a function of problem time. Current TMDPVOL capabilities include varying the fluid condition in any manner and as a function of any problem variable the user desires. Detailed user guidelines for time-dependent volumes are found in Section 4.6. The remainder of this section regards their use for specifying boundary conditions.

The TMDPVOL provides the user with a mechanism for absolutely defining the fluid condition at a point in the model. The user should consider that a TMDPVOL acts as an infinite fluid source or sink. Its conditions remain unchanged (or vary) as requested, but are invariant with inflow or outflow. In nuclear safety system model applications, the need to define the fluid state is typically encountered in two situations: defining back pressures and defining liquid temperatures.

Examples where back pressures are required include the discharges of valves and breaks, and the turbine header. Valves that discharge to the atmosphere typically are modeled using a constant pressure TMDPVOL at the discharge. In addition, for valves that discharge into a complex piping network, the user has the option of (a) modeling the network to a point where the pressure is well known, or (b) estimating the pressure drop through the network and adjusting the TMDPVOL pressure at the valve accordingly.

Volume I of the manual indicates that linear and cubic interpolation between neighboring volume properties is used for junction properties (e.g., densities, void fraction) that are not donored. These junction

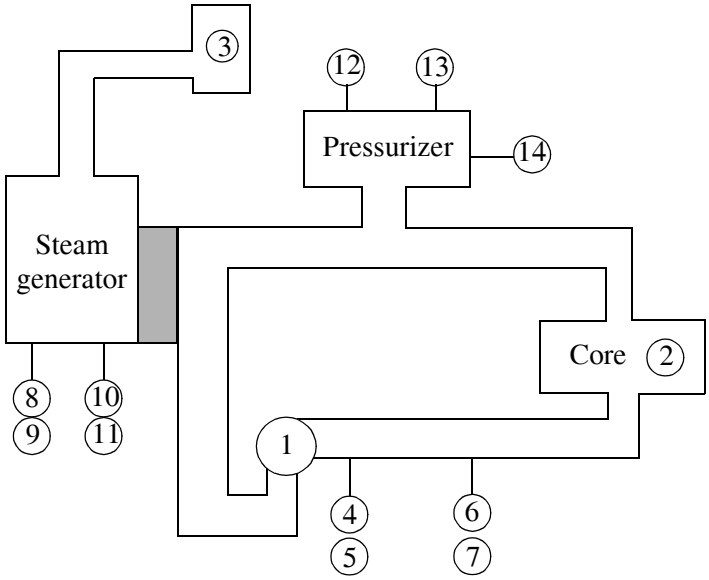

Boundary condition summary

No.	Type	Comment
1	Flow	Pump speed determines coolant flow
2	Power	Core power from table
3	Pressure	Turbine pressure
4	Flow	HPI/LPI flow vs. cold leg pressure
5	Temperature	HPI/LPI fluid temperature
6	Flow	Makeup flow vs. pressurizer level
7	Temperature	Makeup fluid temperature
8	Flow	Feedwater flow
9	Temperature	Feedwater temperature
10	Flow	Auxiliary feedwater flow
11	Temperature	Auxiliary feedwater temperature
12	Pressure	Atmospheric for safety discharge
13	Pressure	Relief tank for PORV discharge
14	Power	Pressurizer heater power

Figure 3.3-2 Simplified diagram of PWR system model boundary conditions.

properties are used in the momentum equations. For the case of a regular junction (i.e., non-time-dependent junction) next to a time-dependent volume (i.e., this back pressure case), the momentum equations are modified to set the junction properties equal to the properties from the volume connected to the junction that is not the time-dependent volume. This results in the correct situation where changing the outlet time-dependent volume properties will not change the calculation results by changing the momentum equations junction properties. Thus, the code does not allow overspecification of the boundary conditions for these cases.

Examples where liquid temperatures are required include the sources for main and auxiliary feedwater, safety injection, and makeup. Typically, these applications assume a constant liquid temperature. However, the capability exists, if the user desires, to include other effects such as a change in liquid temperature as a result of sweeping warm liquid out of a line.

3.3.4.2 Fluid Flow Boundary Conditions. A fluid flow boundary condition (velocity or mass flow rate) is implemented with a time-dependent junction (TMDPJUN) component. This name is also inaccurate because originally, fluid flow could be specified only as a function of problem time. Current TMDPJUN capabilities include varying the flow condition in any manner and as a function of any problem variable the user desires. Detailed user guidelines for time-dependent junctions are found in Section 4.6. The remainder of this section regards their use for specifying boundary conditions.

The TMDPJUN provides the user with a mechanism for absolutely defining an inflow or outflow at any location in the model. The TMDPJUN specification must consider the conditions in the upstream volume. If a constant upstream fluid state is specified with a TMDPVOL, then the TMDPJUN may use either a velocity or an equivalent mass flow rate boundary condition. However, care should be exercised if the upstream fluid state may change during the course of a problem. Consider a problem where the upstream TMDPVOL conditions change during the course of a transient. In this situation, the TMDPJUN will continue to supply the user-requested volumetric or mass flow rate condition, depending on whether the velocity or mass flow rate option is used. Note, however, in this situation the nonrequested rate (volumetric or mass flow) will change as a result of the change in the upstream condition.

It should be noted that for the case of a TMDPVOL (time-dependent volume) and TMDPJUN (time-dependent junction), the pressure upstream of the TMDPJUN in the TMDPVOL is neither changed nor checked by the code to be consistent with that derived from the pressure drop obtained in the momentum equation if the velocity option is used. The pressure upstream is the value that the user enters for the TMDPVOL. If the pressures on either side of the time-dependent junction are not equal, then the time-dependent junction really represents a process like a turbine or a pump. In the case where the upstream pressure is greater than the downstream pressure (i.e., the turbine case), work is extracted from the fluid when it passes through the time-dependent junction. In the case where the upstream pressure is less than the downstream pressure (i.e., the pump case), work is added to the fluid when it passes through the time-dependent junction to get the fluid from the lower pressure volume to the higher pressure volume. Consequently, when a time-dependent junction is used, there is an implied work subtraction or addition (except when the upstream pressure and downstream pressure are the same) that is not normally modeled in the code. This work can be modeled under some circumstances by using the e junction flag (specifies modified PV term in the energy equation) for the time-dependent junction.

In nuclear safety system model applications, the need to define a flow condition is encountered at injection sites for feedwater, auxiliary feedwater, safety injection, and makeup. In these situations, it is recommended that the injection fluid temperature be defined using a TMDPVOL component and that a TMDPJUN component draws fluid from the TMDPVOL and injects it into the reactor coolant system. For situations where the injection flow is known as a function of the reactor coolant system pressure (such as for safety injection), delivery curves can be incorporated into the TMDPJUN. This is accomplished by

specifying the TMDPJUN flow as a function of the adjacent reactor coolant system hydrodynamic cell pressure.

The use of TMDPJUN components for specifying outflow from the reactor coolant system or internal flows within the reactor coolant system is not recommended because the upstream fluid conditions may change rapidly, causing solution difficulties. An example of this situation is the letdown system of a PWR. Assume a TMDPJUN is used to model the letdown as a constant mass flow rate from the cold leg to a TMDPVOL. With this model, the same mass flow rate of liquid will be removed from the reactor coolant system, regardless of the fluid condition within the cold leg. If the model is used in a transient where cold leg vapor/gas appears, the code will encounter difficulties in attempting to continue removing only liquid from a cell where both liquid and vapor/gas are found. The difficulties can be circumvented to some extent by specifying a volumetric rather than a mass flow rate condition. With this method, however, the user must understand that the volumetric flow rate will continue, even if two-phase fluid or single-phase steam is present in the cold leg. A preferable method for modeling the letdown is to use a VALVE component connected to a TMDPVOL. The VALVE is sized to pass the desired normal flow rate and the pressure in the TMDPVOL is specified to best simulate the letdown flow rate response during transients.

3.3.4.3 Heat Structure Boundary Conditions. Several boundary conditions may be specified using heat structures. Heat sources may be specified within a heat structure. These sources may be determined either by evaluating a general table [such as one specifying the American Nuclear Society (ANS) standard decay heat following a reactor trip] or by the output of the reactor kinetics model. A variety of options are available for applying external boundary conditions on the surfaces of heat structures. The most common heat structure surface external boundary condition is adiabatic. In general, the adiabatic boundary condition is satisfactory for the external surfaces of insulated reactor coolant system pipes. However, for particularly long transients, heat loss to the environment can become an important effect. The code user should ensure that this is not the case prior to generally applying the adiabatic surface option. Other heat structure surface boundary options allow the user to specify surface temperature, heat transfer coefficient, or heat flux as an external boundary assumption. Further discussion of heat structure boundary conditions appears in Section 4.7.3.

3.4 Special Model Applications

This section describes several special application techniques.

3.4.1 Break Modeling

A common code application is simulating a loss-of-coolant accident (LOCA) involving the full or partial rupture of a coolant pipe within an air-filled containment. These applications may involve experimental facility or full-scale plant LOCA simulations.

The need to adequately measure the break flow in an experimental facility usually dictates a complex experimental break geometry to provide clearance for instrumentation. The experimental facility break design often involves a side pipe leading from the broken pipe to a break orifice and valve. This complex design is best modeled in detail (i.e., the geometry upstream and downstream of the break should be

modeled directly). Courant limiting considerations will be important in this application because the fluid velocities in the pipe leading to the break will be large. In most analyses of experimental facility LOCAs, benchmarking the break flow path has been necessary to compensate for uncertainties in the break path resistance and the code break flow models. The benchmarking process consists of using experimental data that characterize the break resistance to adjust the model flow losses for an adequate comparison between measured and calculated break flow. The adjustment is typically accomplished by adjusting the discharge coefficients on the break junction.

For full-scale plant applications, the break modeling process typically is more straightforward because the break geometry is simpler. Common LOCA applications for full-scale plants include the opening of circular breaks on the top, side, or bottom of a coolant pipe and the double-ended break of a coolant pipe. For full-scale plants, breaks typically are assumed to open instantly. **Figure 3.4-1** shows a recommended nodalization for modeling small and double-ended breaks in a coolant pipe. In both applications, the broken pipe is simulated with volumes 110 and 120.

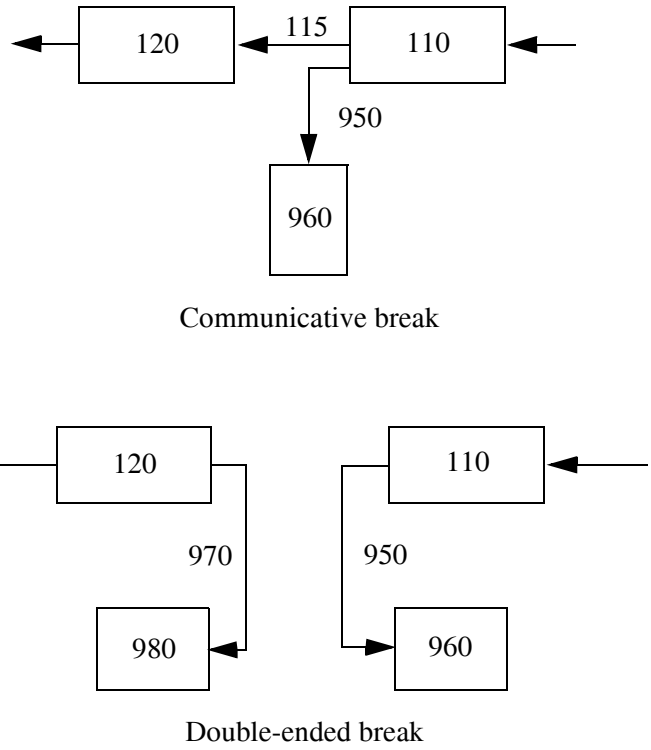

Figure 3.4-1 Coolant system break modeling.

The small communicative break is simulated by adding single-junction 950 and TMDPVOL 960 to the existing hot leg pipe model. The term “communicative” implies a portion of the normal flow through the pipe continues after the break is opened. Note that the break components may be installed on restart, at

the time of break opening, by including components 950 and 960 in the input stream. Break junction 950 should employ the abrupt area change option, simulating the combined flow losses associated with the sharp-edged area reduction from the pipe to the break plane and the sharp-edged expansion from the break plane to the containment. Junction 950 should employ the choking option and be initialized at a zero flow condition. The junction control flags provide the capability to locate the break on the top, side, or bottom of the pipe.

TMDPVOL 960 simulates the containment into which the break discharges; this implies the containment state is a boundary condition in the calculation. Frequently, a constant-pressure containment assumption is used. If the containment pressure response is known (e.g., as a function of the integrated break flow), then that response may be included in the simulation. For the double-ended break the nodalization includes two break junctions and two TMDPVOLs, as shown in **Figure 3.4-1**. Note that two TMDPVOLs are needed because no more than one junction may be attached to a TMDPVOL. As for the small break, the break junctions should employ the abrupt area change and choking options. Care should be used when specifying the initial break conditions. In the example shown, the initial mass flow rate for junction 950 should be positive at the same rate as at the inlet to volume 110; the initial mass flow for junction 970 should be negative and of the same magnitude.

In the above examples, the breaks also could have been implemented by including trip valve components at the break junctions in the original model rather than by adding them on restart. The valves would then be tripped open at the time of the break. Using this technique, the breaks may be opened at any time, not just at a restart point.

The containment condition specification is more important in some applications than in others. For small break applications, the primary coolant system depressurization typically is small, the pressure drop across the break remains large, and the break flow remains both choked and positive (into the containment). The containment conditions specified in this situation are not particularly significant to the simulation. The problem is only moderately sensitive to the containment pressure and is insensitive to its gas species. However, for large breaks, transitions between choked- and friction-dominated flow, and intermittent reverse flow from the containment are likely. In this case, it is important to adequately specify the containment conditions.

For some problems where the response of the containment is particularly important, it may be possible for an approximation of the containment behavior to be included as a part of the model. This could be accomplished by modeling the containment and the actual containment mass and heat balances. The code has not been extensively applied in this manner, however.

As a final note, the analyst should appreciate that critical break flow simulation represents an area of significant uncertainty. For some problems, this uncertainty may be a controlling factor for the outcome of the simulation. It is therefore recommended that care be taken to independently check code-calculated break flow results either against experimental data in similar geometries or against standard critical flow correlations.

A recommended procedure for correctly specifying the break area and discharge coefficient is linked to the break scenario, the break plane geometry, and whether any data exists for that geometry. Assuming a discharge coefficient of 1.0 is valid, the following generalities are known concerning the RELAP5-3D© critical flow model:

- For subcooled conditions, the RELAP5-3D© -calculated flow is too large. Often, it is found that a discharge coefficient of about 0.8 is needed to predict break flow in representative geometries containing break nozzles with length-to-diameter ratios less than 1.0.

- For low-quality saturated conditions, RELAP5-3D© -calculated mass flow rates are too low, often by as much as 20%, even when a discharge coefficient of 1.0 is used.

- Higher-quality saturated conditions at the break plane, such as are approximated by the homogeneous equilibrium model, are well-simulated with RELAP5-3D© .

If the containment is modeled with regular volumes (i.e., not time-dependent volumes representing boundary volumes), improvement of the calculation of the energy convected downstream of a large expansion, wherein the differential pressure is large, is provided by application of an energy correction term at the junction. The need for this energy correction term arises from RELAP5-3D© 's use of the internal energy equation rather than the total energy equation. This is of little consequence under conditions in which the pressure difference between adjacent volumes is relatively small. But if it is very large, as it would be across a choked junction, an understatement of the energy deposited downstream will occur, of the order of the kinetic energy of the expanding fluid. This correction term is activated by using flag e of the junction flags "efvcahs." This energy correction method should only be applied to those individual junctions where large expansions occur or in those models that incorporate a combination of low-pressure systems with the primary system in a reactor plant, an example of which is the reactor containment system.

3.4.2 Boron Model

The boron model is implemented by specifying an initial boron concentration (mass of boron per mass of liquid) in one or more volumes of a hydrodynamic system. Boron is specified using the b digit of the volume initial condition packed control word "εbt." A value of b = 0 indicates no boron is present, b = 1 indicates boron is present and requires a boron concentration to be entered as a part of volume initialization specification.

The boron model provides for tracking boron concentrations from injection sites, around coolant loops, out of coolant breaks, and through reactor cores. The purpose of boron tracking usually is to find the boron concentration within the core to determine a corresponding reactivity feedback effect. Therefore, it is appropriate to invoke the boron model only in problems where core power is calculated using the reactor kinetics model and the core boron concentration is expected to vary. The RELAP5-3D© boron model

assumes that boron is present only in the liquid phase and is transported along with the liquid phase. The model should be considered only a first-order approximation of boron effects because simulations of some potentially important effects, such as boron plateout and precipitation, are beyond the capability of the model. Note also that implementing the boron model does not affect the assumed fluid properties (e.g., the fluid density). The code output quantity (edits and plots) is spatial boron density (mass of boron per total volume of liquid and vapor/gas).

The boron concentration may be used as a component reactivity for the reactor kinetics core power calculation either using the TABLE4 or TABLE4A reactor kinetics option or through a separate reactivity entry using a table or control variable. Using the TABLE4 method involves the generation of a four-dimensional table describing the coupled reactivity effects of moderator fluid density, moderator fluid temperature, fuel temperature, and spatial boron density. Using the TABLE4A method involves the generation of a four-dimensional table describing the coupled reactivity effects of void fraction, liquid moderator temperature, fuel temperature, and boron concentration. The separate method considers the boron effect simply as an independent reactivity component. The user is cautioned that the boron model has not been applied extensively.

3.4.3 Noncondensable Model

The noncondensable model is implemented by specifying a noncondensable gas type on control Card 110 and indicating noncondensable on one or more volume initial condition cards. A mixture of noncondensable gases may be specified by indicating more than one gas type on Card 110 and specifying their mass fractions on Card 115. For time dependent volumes, it is possible to enter mass fractions that are different than those on Card 115. If an accumulator component is used in the problem, the noncondensable gas must be nitrogen (or include nitrogen in the case of a mixture). Available gas types are argon, helium, hydrogen, nitrogen, xenon, krypton, air, and sf6.

The noncondensable gas model assumes the noncondensible gas is tracked with the vapor/gas phase. Furthermore, the resulting gas-vapor mixture is assumed to be isothermal (i.e., the gas and vapor are in thermal equilibrium). A total pressure is calculated for the vapor/gas mixture; the partial pressure of vapor is available as a standard output variable.

The user is cautioned that the noncondensable model has been used only in a limited number of applications. Experience has shown that initialization difficulties may be encountered when the t = 6 option (in the volume initial condition packed word "εbt") is used to specify initial volume conditions with noncondensables. The t = 8 option is easier to use that the t = 6 option, however the t = 8 option is a recent addition with limited user experience. For this purpose, the t = 4 option is recommended. This is discussed further in Volume II of the manual, Section 2.3.4 and Appendix A. Further experience has shown that calculational difficulties may be encountered during periods when a mixture of noncondensable gas and vapor is appearing or disappearing (i.e., at very small void fractions). Circumventing these difficulties has required the analyst to manually (e.g., on restart) insert or remove vapor/gas to artificially aid its appearance or disappearance.

3.4.4 Reflood Model

The reflood model is implemented by specifying a nonzero reflood condition flag on the fuel rod general heat structure cards (format 1CCCG000). As described in the user input data requirements manual (Volume II, Appendix A), reflood may be initiated when the adjacent volumes are voided to an average value of 0.9 or 0.1 and the pressure is below 1.2 MPa, or by user-specified trip. The reflood option must be specified when the heat structure geometry data are first described. Once described, the heat structure geometry for the reflood structures cannot be deleted or changed.

Reflood is a phase associated with a large break LOCA sequence. Because RELAP5-3D© was developed primarily as a small break LOCA analysis tool, the reflood model has received only limited developmental assessment evaluation and independent application experience. Therefore, few recommendations regarding reflood simulation and option selection may be made at this time.

3.4.5 Crossflow Junction Model

A hydrodynamic cell is interconnected with other cells through junctions at the cell faces. For the one-dimensional option in RELAP5-3D© , each hydrodynamic cell has two faces in the normal direction, at the inlet and outlet. The crossflow junction model allows connecting junctions at the cell faces in the cross-direction in addition to the normal junctions at the cell faces in the normal direction.

The crossflow is implemented using the expanded connection code. The expanded connection code has the format CCCXX000F where CCC is the component number, XX is the volume number, and F is the face number. The expanded connection code assumes that a volume has six faces, i.e., an inlet and outlet for each of the three coordinate directions. The expanded connection code indicates the volume being connected and through which face it is being connected. For components specifying single-volumes, XX is 01; but for pipes, XX can vary from 01 for the first pipe volume to the last pipe volume number. The quantity F is 1 and 2 for the inlet and outlet faces, respectively, for the volume's normal or x-coordinate direction. The quantity F is 3 and 4 to indicate inlet and outlet faces for the y-direction, and F is 5 and 6 to indicate inlet and outlet faces for the z-direction. Entering F as 1 or 2 specifies normal connections to a volume; entering F as 3 through 6 specifies a crossflow connection to a volume.

One important feature of a crossflow junction is the way that it handles the "momentum flux". Once a junction is connected to faces other than the normal direction (x-direction) of a volume, the volume-averaged velocities will be calculated in the direction of this crossflow junction besides the normal direction for that volume. These volume-averaged velocities are used for the "momentum flux" for the crossflow junction. For demonstrating the mathematical model of the crossflow, we shall use, herein, the finite difference form of the liquid phase momentum equation. A parallel formulation holds for the vapor/ gas phase momentum equation. For instance, a tee is modeled with a crossflow junction connected to face 4 as shown in **Figure 3.4-2**.

The liquid phase momentum finite difference equations for junctions 1 and 2 are given below (see Volume I of this manual).

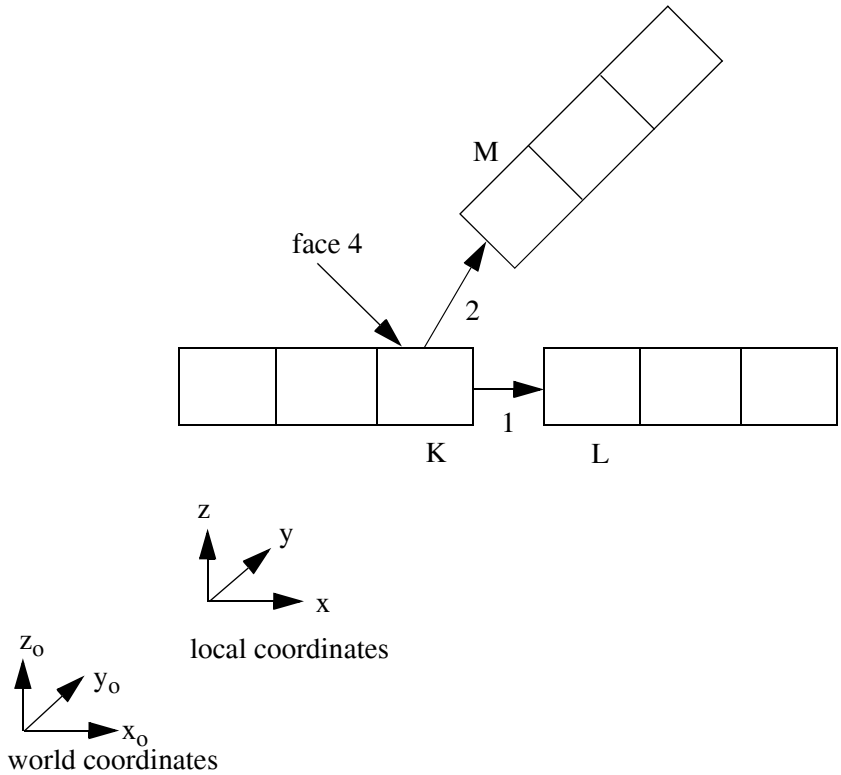

Figure 3.4-2 Volume with a crossflow junction.

For junction 1:

$$
\begin{aligned}
&(\alpha_f\rho_f)_1^n(v_f^{n+1} - v_f^n)_1\Delta x_1 + \frac{1}{2}(\alpha_f\rho_f)_1^n[(v_f^2)_L^n - (v_f^2)_{K,x}^n]\Delta t + \text{ VISCOUS TERMS} \\
&\quad = -\alpha_{f,1}^n(P_L^{n+1} - P_K^{n+1})\Delta t - (\alpha_f\rho_f)_1^n(FWF_1^n\Delta x_1 + HLOSSF_1^n)v_{f,1}^{n+1}\Delta t \\
&\qquad - (\alpha_f\rho_f)_1^n FIF_1^n(v_{f,1}^{n+1} - v_{g,j}^{n+1})\Delta x_1\Delta t + (\alpha_f\rho_f)_1^n B_x\Delta x_1\Delta t \\
&\qquad + \text{ VIRTUAL MASS + MASS TRANSFER MOMENTUM} \\
&\qquad\quad + \text{ STRATIFIED PRESSURE GRADIENT EFFECT } .
\end{aligned}
\tag{3.4-1}
$$

For junction 2:

$$
\begin{aligned}
&(\alpha_f\rho_f)_1^n(v_f^{n+1} - v_f^n)_2\Delta y_2 + \frac{1}{2}(\alpha_f\rho_f)_2^n[(v_f^2)_M^n - (v_f^2)_{K,y}^n]\Delta t + \text{ VISCOUS TERMS} \\
&\quad = -\alpha_{f,2}^n(P_M^{n+1} - P_K^{n+1})\Delta t - (\alpha_f\rho_f)_2^n(FWF_2^n\Delta y_2 + HLOSSF_2^n)v_{f,2}^{n+1}\Delta t \\
&\qquad - (\alpha_f\rho_f)_2^n FIF_2^n(v_{f,2}^{n+1} - v_{g,2}^{n+1})\Delta y_2\Delta t + (\alpha_f\rho_f)_2^n B_y\Delta y_2\Delta t \\
&\qquad + \text{ VIRTUAL MASS + MASS TRANSFER MOMENTUM} \\
&\qquad\quad + \text{ STRATIFIED PRESSURE GRADIENT EFFECT } .
\end{aligned}
\tag{3.4-2}
$$

The volume-averaged velocities $(v_f)_{K,x}$, $(v_f)_{K,y}$ are calculated for volume K, and the length scales Δx_1, Δy_2 are determined based on the geometry input by the user or are based on default values. It should be noted that the x-direction volume-averaged velocity for volume K is used for the junction 1 while y-direction volume-averaged velocity for volume K is used for the junction 2. The momentum flux term in junction 2 is important in the determination of the pressure drop across the junction as shown in the examples below. The flux term can be controlled by the user using the s option in the junction control flag jefvcahs. The digit s = 0 uses momentum flux in both the to (L) volume and the from (K) volume. The digit s = 1 uses momentum flux in the from (K) volume but not in the to (L) volume. The digit s = 2 uses momentum flux in the to (L) volume but not in the from (K) volume. The digit s = 3 does not uses momentum flux in either the to (L) or the from (K) volume.

While the crossflow option provides a tool to simulate flow behavior in multi-dimensional flow geometries, a crossflow-linked model does not provide a full three-dimensional modeling capability. The MULTID component should be used for full three-dimensional modeling capability. Suggested applications of the crossflow model are presented in the following examples: right angle connections and parallel paths.

Example 1--Right Angle Connections

The connection of a PWR pressurizer surge line to the hot leg is a logical application for the crossflow model. The surge line in many plants enters the top of the hot leg at a right angle. During normal operation, the surge line flow is nearly zero while the hot leg flow is large. In most accident simulations, the pressurizer outsurge rate is small compared to the hot leg flow. Furthermore, since the entry is at a right angle, the momentum of any entering small surge line flow does not have a significant component in the axial hot leg direction.

A suggested nodalization of the surge line/hot leg connection is shown in **Figure 3.4-3**. The local region of the hot leg is represented by components 100, 110, and 120; the pressurizer surge line is represented by component 550. As discussed previously, it is desirable to model the coolant loops symmetrically.[a] In the loops with and without the pressurizer, the piping corresponding to components

a. Although many plants and experimental facilities are symmetrical, some facilities are not symmetrical. Loop nodalization for nonsymmetrical facilities should be completed on a loop-specific basis.

100, 110, and 120 may be lumped into a single pipe component. Symmetry may be maintained by sizing the loop components comparably. However, to accomplish this requires placing the center of a hot leg cell in each loop at the location corresponding to the pressurizer surge connection point. The user should therefore lay out the nodalization for the loop with the pressurizer first because it will define the nodalizations for the other loops as well.

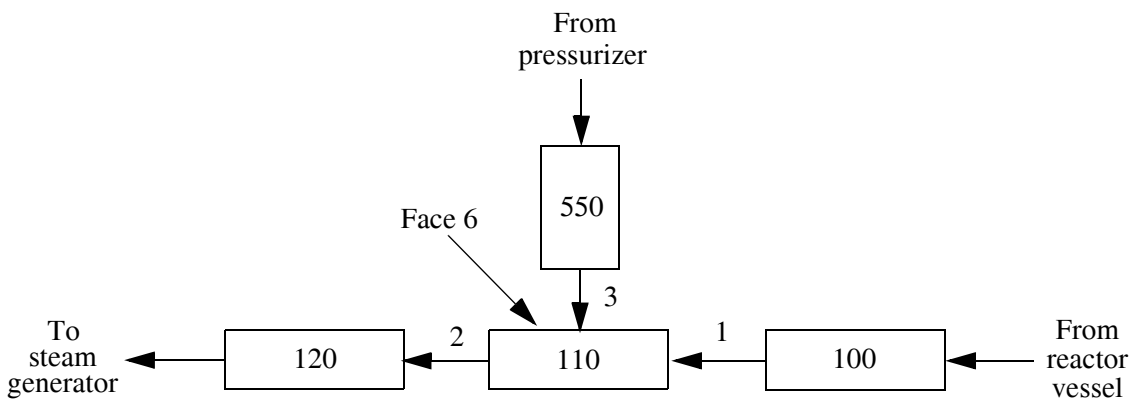

Figure 3.4-3 Surge line/hot leg crossflow connection application.

In **Figure 3.4-3**, components 100 and 120 might be single-volume components and component 550 might be a pipe. The connection would then be accomplished by using a branch for component 110. The branch would include three junctions with positive directions as indicated in the figure. Junctions 1 and 2 would be normal junctions at the inlet and outlet faces of cell 110. Junction 3 would be a crossflow junction. The junction is specified as being on the top of the hot leg pipe and is connected to face 6. A junction flag (jefvcahs) of 00010000 would be used to activate the offtake model. A full nonhomogeneous solution will be generated, the countercurrent flow limiting model is not operative, and the choking model is operative. Note the a = 0 option has been selected. The forward and reverse flow loss coefficients associated with a 90 degree tee should be determined independently by the user and manually input; a procedure to do this will next be described.

When a form loss coefficient for a right angle connection crossflow junction is manually entered by the user, it is sometimes desired to estimate the magnitude of the pressure drop for that particular loss coefficient. This requires an understanding of the momentum equations used in the RELAP5-3D© code and the terms altered by the crossflow model in the equations.

As an example, consider the right angle connection tee modeled by crossflow junction 3 in the horizontal x-y plane as shown in **Figure 3.4-4**. This is for the case where pipe 2 joins pipe 1 at volume 3 of pipe 1. It can be connected to face 1 or 2 of volume 3 using a normal junction or to face 3, 4, 5, or 6 of volume 3 using a crossflow junction. **Figure 3.4-4** shows a crossflow junction connected to face 4. A user K loss coefficient is used at junction 3. The geometry of the pipes and the flow boundary conditions for the case of dividing flow are given in **Figure 3.4-4**. Idelchik[3.4-1] discusses the cases of dividing, merging, and

converging flow. Only the dividing flow case will be discussed here. The figure shows a single-phase, steady-state liquid flow. Flow in pipe 2 is dividing in pipe 1 at volume 3 of pipe 1. The smooth area options are used.

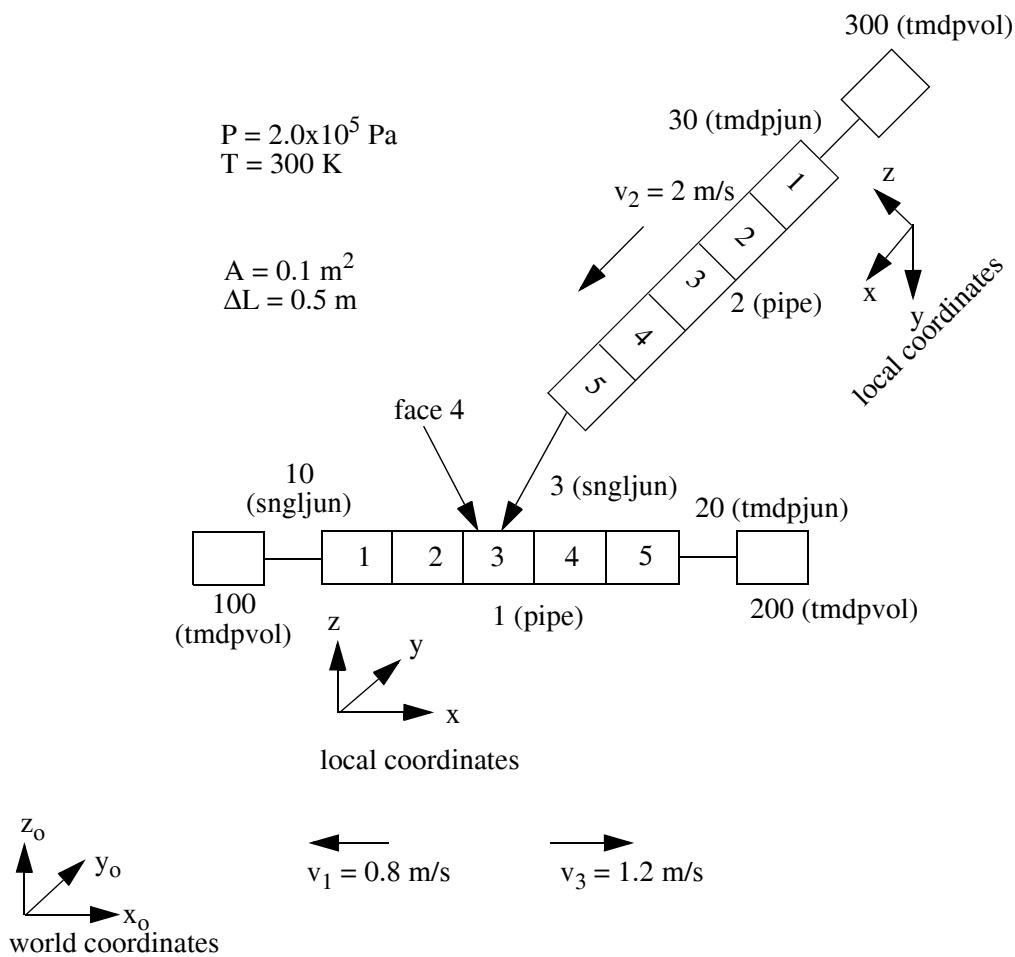

Figure 3.4-4 RELAP5-3D© nodalization of a tee with crossflow junction.

It is instructive to examine how the pressure drop across the tee (i.e., the pressure drop between volume 5 of pipe 2 and volume 4 of pipe 1) is calculated by the RELAP5-3D© code. For this dividing flow example problem, which represents steady-state, single-phase liquid flow in the x-y plane, some assumptions can be made in order to simplify the equation. The time-dependent terms drop out, the interphase friction term drops out, and wall friction can be turned off to eliminate the wall friction term. The virtual mass, mass transfer momentum, and stratified pressure gradient terms can all be neglected, and the body force can be neglected since the gravity is in the z-direction. The momentum equation for the junction connected to volume 5 of pipe 2 (volume 2-05) and volume 3 of pipe 1 (volume 1-03) can be written as

$$P_{2-05} + \frac{1}{2}\rho_f(v_{f,2-05,x}^2 + \mathrm{difvfx}_{2-05,x})$$
$$= P_{1-03} + \frac{1}{2}\rho_f(v_{f,1-03,y}^2 + \mathrm{difvfx}_{1-03,y}) + \frac{1}{2}K_{junction}\rho_f v_{f,3}^2 \quad . \tag{3.4-3}$$

The term $K_{junction}$ is the user input K loss at junction 3. Here $v_{f,2\text{-}05,x}$ represents the volume-averaged velocity in volume 2-05's x-direction, and $\mathrm{difvfx}_{2\text{-}05,x}$ is the volume viscous term resulting from the donor formulation of the momentum flux in volume 2-05's x-direction. The $v_{f,1\text{-}03,y}$ and $\mathrm{difvfx}_{1\text{-}03,y}$ terms are similar terms in volume 1-03's y-direction. The difference between the two difvfx terms is the artificial viscosity term in the momentum equation (see Volume I of this manual for detailed discussion). In general, the volume-averaged velocity for volume L's x-direction is calculated using the equation

$$v_{f,L,x} = \frac{\left[\sum_{j=1}^{Jin,x} (\dot{\alpha}\dot{\rho}v)_{f,j}A_j f_j\right]\left[\sum_{j=1}^{Jin,x} A_j\right] + \left[\sum_{j=1}^{Jout,x} (\dot{\alpha}\dot{\rho}v)_{f,j}A_j f_j\right]\left[\sum_{j=1}^{Jout,x} A_j\right]}{A_{L,x}\sum_{j=1}^{Jin,x+Jout,x} (\dot{\alpha}\dot{\rho})_{f,j}A_j} \quad . \tag{3.4-4}$$

The term f_j is +1 if junction and volume x-directions are oriented the same and -1 if not. The summations are over junctions connected to x-direction faces 1 and 2, where Jin,x is the number of junctions attached to inlet face 1 and Jout,x is the number of junctions attached to outlet face 2. Similar equations are used for volume L's y-direction and z-direction. The artificial viscosity term for volume L's x-direction is given as

$$\mathrm{difvfx}_{L,x} = v_{f,L,x}\left[\frac{1}{2}(v_{f,in,x} + v_{f,out,x}) - v_{f,L,x}\right] + \frac{1}{2}|v_{f,L,x}|(v_{f,in,x} - v_{f,out,x}) \quad . \tag{3.4-5}$$

where

$$v_{f,in,x} = \frac{\left[\sum_{j=1}^{Jin,x} \dot{\alpha}_{f,j}\dot{\rho}_{f,j}v_{f,j}A_j f_j\right]\sum_{j=1}^{Jin,x} A_j}{\left[\sum_{j=1}^{Jin,x} \dot{\alpha}_{f,j}\dot{\rho}_{f,j}A_j\right]A_{L,x}} \tag{3.4-6}$$

$$v_{f,\,out,\,x} = \frac{\left[\sum_{j=1}^{Jout,\,x} \dot{\alpha}_{f,\,j}\dot{\rho}_{f,\,j}v_{f,\,j}A_j f_j\right]\sum_{j=1}^{Jout,\,x} A_j}{\left[\sum_{j=1}^{Jout,\,x} \dot{\alpha}_{f,\,j}\dot{\rho}_{f,\,j}A_j\right]A_{L,\,x}} \quad . \tag{3.4-7}$$

Again the term f_j is +1 if junction and volume x-directions are oriented the same and -1 if not. Similar equations are used for volume L's y-direction and z-direction.

The momentum equation for the junction from volume 3 of pipe 1 (volume 1-03) to volume 4 of pipe 1 (volume 1-04) can be written as

$$P_{1-03} + \frac{1}{2}\rho_f(v^2_{f,\,1-03,\,x} + difvfx_{1-03,\,x}) = P_{1-04} + \frac{1}{2}\rho_f(v^2_{f,\,1-04,\,x} + difvfx_{1-04,\,x}) \quad . \tag{3.4-8}$$

Consequently, the pressure balance between volume 5 of pipe 2 (volume 2-05) to volume 4 of pipe 1 (volume 1-04) can be obtained from Equations (3.4-3), and it is given by

$$\begin{aligned} P_{2-05} + \frac{1}{2}\rho_f(v^2_{f,\,2-05,\,x} + difvfx_{2-05,\,x}) &= P_{1-04} + \frac{1}{2}\rho_f(v^2_{f,\,1-04,\,x} + difvfx_{1-04,\,x}) + \frac{1}{2}K_{junction}\rho_f v^2_{f,\,3} \\ &+ \frac{1}{2}\rho_f(v^2_{f,\,1-03,\,y} + difvfx_{1-03,\,y}) - \frac{1}{2}\rho_f(v^2_{f,\,1-03} + difvfx_{1-03,\,x}) \quad . \end{aligned} \tag{3.4-9}$$

From the above equation, one can easily show that the pressure loss or gain depends on the momentum flux formulation in volume 3 of pipe 1.

The standard Bernoulli equation plus the effects of form loss for the tee between volume 5 of pipe 2 and volume 4 of pipe 1 is

$$P_{2-05} + \frac{1}{2}\rho_f v^2_{f,\,2-05,\,x} = P_{1-04} + \frac{1}{2}\rho_f v^2_{f,\,1-04,\,x} + \frac{1}{2}K_{Idelchik}\rho_f v^2_{f,\,3} \tag{3.4-10}$$

where $K_{Idelchik}$ is the loss coefficient from Idelchik.[3.4-1] This K loss is based on the velocities at junction 3. Idelchik also shows a K loss based on volume 1-04; if this is used, $v_{f,1\text{-}04,x}$ is used in the K loss term in Equation (3.4-10) rather than $v_{f,3}$. Comparing Equation (3.4-9) for RELAP5-3D© and Equation (3.4-10) for the Bernoulli plus form loss equation, it is possible to recast Equation (3.4-9) into the Bernoulli plus form loss equation. The resulting equation is

$$P_{2-05} + \frac{1}{2}\rho_f v_{f,2-05,x}^2 = P_{1-04} + \frac{1}{2}\rho_f v_{f,1-04,x}^2 + \frac{1}{2}K_{Idelchik}\rho_f v_{f,3}^2 \tag{3.4-11}$$

where

$$\begin{aligned} K_{Idelchik} &= \frac{difvfx_{1-04,x} - difvfx_{2-05,x}}{v_{f,3}^2} + \frac{(v_{f,1-03,y}^2 + difvfx_{1-03,y}) - (v_{f,1-03,x}^2 + difvfx_{1-03,x})}{v_{f,3}^2} \\ &\quad + K_{junction} \\ &= K_1 + K_2 + K_{junction} \\ &= K_{RELAP5-3D^{©}} + K_{junction} \ . \end{aligned} \tag{3.4-12}$$

The variable $K_{RELAP5-3D^{©}}$ is the sum of K_1 and K_2. The variable K_1 is the artificial viscous term associated with volumes 1-04 and 2-05. The variable K_2 is the loss term associated with using crossflow. The variable $K_{junction}$ is the user input K loss at junction 3.

If a normal junction is connected to face 1 or face 2 of volume 3 of pipe 1, there will be no crossflow form loss ($K_2 = 0$). For this particular case, K_1 is also zero ($K_1 = 0$). In general, K_1 is not zero. For this case, $K_{Idelchik} = K_{junction}$. The difference in the volume-averaged velocities used in the "momentum flux" in volume 1-03 for the crossflow junction case will result in a pressure drop or gain across the tee. In order to show the effect of the "momentum flux" for the pressure drop of a crossflow junction, RELAP5-3D© calculations were run for the sample problem as described in **Figure 3.4-4**, with volume 5 of pipe 2 connected to face 4, face 1, or face 2 of volume 3 of pipe 1. In the calculation, a K loss coefficient of 1.108 as given by Idelchik[3.4-1] was used at junction 3 ($K_{junction} = 1.108$). The momentum flux option s was set to zero (s = 0, uses momentum flux in both the to volume and from volume). The volume-averaged values used in the calculation are summarized in **Table 3.4-1**, **Table 3.4-2**, and **Table 3.4-3** for volume 5 of pipe 2 connected to face 4, face 1, and face 2 of volume 3 of pipe 1, respectively. The pressure drop between volume 2-05 and volume 1-04 calculated with a crossflow junction is greater than that calculated with a normal junction (i.e., connected to face 1 or 2). In order to have the same pressure drop using a crossflow junction, one has to decrease $K_{junction}$ to match the desired results. The value of $K_{junction}$ is obtained from Equation (3.4-12), where $K_1 = 0$, $K_2 = (\{(-1.4273)^2 - [(0.2)^2 + (-0.2)]\})/(2.0)^2 = 0.5493$, $K_{RELAP5-3D^{©}} = 0.5493$, and $K_{Idelchik} = 1.108$. In this case, $K_{junction}$ of 0.5587 was used as shown in **Table 3.4-1**.

Table 3.4-1 Volume-averaged values used in momentum flux for dividing flow with crossflow junction to face 4 of volume 1-03.

Case: Dividing Flow v_1 **= -0.8 m/s** v_2 **= 2.0 m/s** v_3 **= 1.2 m/s**

Connected to face 4 (crossflow)							
	vol. 1-02		**vol. 1-03**		**vol. 1-04**		**vol. 2-05**
		jun. 1-02		**jun. 1-03**		**jun. 3**	
ρ_f (kg/m^3)	996.71		996.71		996.71		996.71
velf-x (m/s)	-0.8		0.2		1.2		2.0
velf-y (m/s)			-1.4273				
velfj (m/s)		-0.8		1.2		2.0	
difvfx-x (m^2/s^2)	0		-0.2		0		0
difvfx-y (m^2/s^2) with $K_{junction}$ = 1.108			0				
P (Pa) with $K_{junction}$ = 0.5587	2.00000x10^5		2.00399x10^5		1.99601x10^5		2.01642x10^5
P (Pa)	2.00000x10^5		2.00399x10^5		1.99601x10^5		2.00542x10^5

Table 3.4-2 Volume-averaged values used in momentum flux for dividing flow with normal junction to face 1 of volume 1-03.

Case: Dividing Flow v_1 **= -0.8 m/s** v_2 **= 2.0 m/s** v_3 **= 1.2 m/s**

Connected to face 1							
	vol. 1-02		**vol. 1-03**		**vol. 1-04**		**vol. 2-05**
		jun. 1-02		**jun. 1-03**		**jun. 3**	
ρ_f (kg/m^3)	996.71		996.71		996.71		996.71
velf-x (m/s)	-0.8		1.2		1.2		2.0
velf-y (m/s)			0.0				
velfj (m/s)		-0.8		1.2		2.0	
difvfx-x (m^2/s^2)	0		0		0		0
difvfx-y (m^2/s^2) with $K_{junction}$ = 1.108			0				
P (Pa)	2.00000x10^5		1.99601x10^5		1.99601x10^5		2.00545x10^5

Table 3.4-3 Volume-averaged values used in momentum flux for dividing flow with normal junction to face 2 of volume 1-03.

Case: Dividing Flow v_1 **= -0.8 m/s** v_2 **= 2.0 m/s** v_3 **= 1.2 m/s**

Connected to face 2							
	vol. 1-02		**vol. 1-03**		**vol. 1-04**		**vol. 2-05**
		jun. 1-02		**jun. 1-03**		**jun. 3**	
ρ_f (kg/m^3)	996.71		996.71		996.71		996.71
velf-x (m/s)	-0.8		-0.8		1.2		2.0

Table 3.4-3 Volume-averaged values used in momentum flux for dividing flow with normal junction to face 2 of volume 1-03. (Continued)

Case: Dividing Flow v_1 **= -0.8 m/s** v_2 **= 2.0 m/s** v_3 **= 1.2 m/s**

Connected to face 2							
	vol. 1-02		**vol. 1-03**		**vol. 1-04**		**vol. 2-05**
		jun. 1-02		**jun. 1-03**		**jun. 3**	
velf-y (m/s)			0.0				
velfj (m/s)		-0.8		1.2		2.0	
difvfx-x (m^2/s^2)	0		0		0		0
difvfx-y (m^2/s^2) with $K_{junction}$ =1.108			0				
P (Pa)	2.00000×10^5		2.00000×10^5		1.99601×10^5		2.00545×10^5

As shown in Equation (3.4-12), the user has to adjust the input K loss coefficient ($K_{junction}$) for a crossflow junction in order to get the desired pressure drop. The K loss coefficient ($K_{Idelchik}$), in general, is a function of geometry and flow conditions. To illustrate this point, more calculations were performed for the dividing flow case. The same piping arrangement as **Figure 3.4-4** was used. The flow in pipe 2 was 2 m/s (v_2 = 2 m/s). It split as it flowed into pipe 1. Calculations were performed with various flows to the right. The velocity (v_3) to the right was varied from 0.0 to 2.0 m/s. Thus, velocity (v_1) to the left varies from -2.0 to 0.0 m/s. The total frictional pressure drop is given by

$$\Delta P = P_{2-05} + \frac{1}{2}\rho_f v_{f,\,2-05,\,x}^2 - P_{1-04} - \frac{1}{2}\rho_f v_{f,\,1-04,\,x}^2 \qquad (3.4\text{-}13)$$

and is shown in **Figure 3.4-5**. If one uses the K loss coefficient as given by Idelchik[3.4-1] for $K_{junction}$, the pressure drop between volume 2-05 and volume 1-04 is too high as shown in **Figure 3.4-5**. In order to get the correct pressure drop, one has to adjust the K loss coefficient to a lower value as shown in **Figure 3.4-6** to get the correct pressure drop as given in **Figure 3.4-5**. The **Table 3.4-1** case is for (v_3/v_2) = 0.6. The value used for $K_{junction}$ for each velocity ratio (v_3/v_2) was obtained by solving Equation (3.4-13) for $K_{junction}$

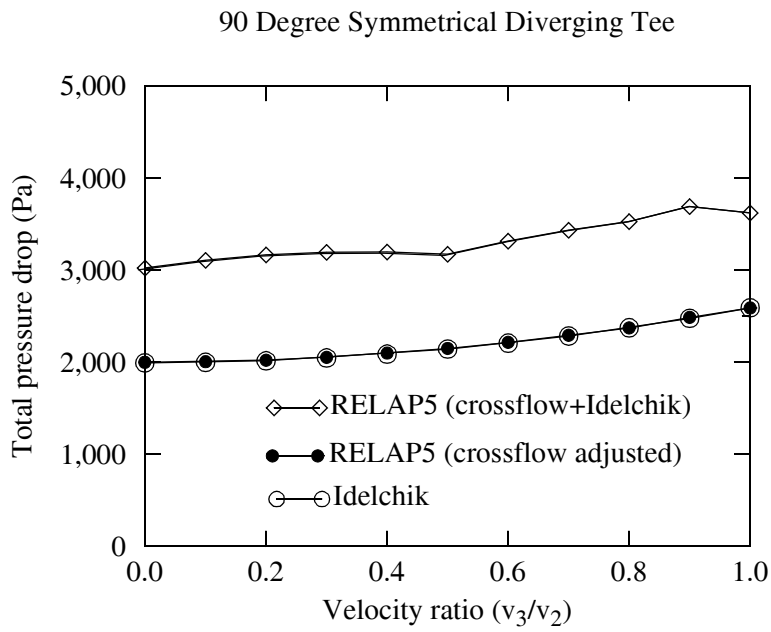

Figure 3.4-5 Total pressure drop as a function of velocity ratio.

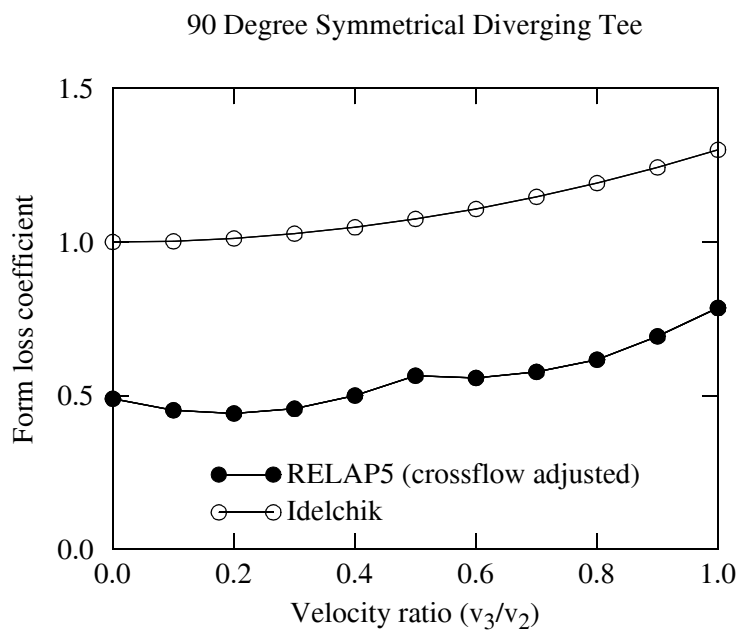

Figure 3.4-6 K loss factor as a function of velocity ratio.

$$K_{junction} = K_{Idelchik} - (K_1 + K_2) = K_{Idelchik} - K_{RELAP5-3D©} \quad . \tag{3.4-14}$$

The terms $K_{RELAP5\text{-}3D©} = K_1 + K_2$ were obtained by running a RELAP5-3D© calculation with $K_{junction} = 0$. The terms $K_{RELAP5\text{-}3D©} = K_1 + K_2$ could have also been obtained by hand calculations using Equations (3.4-4) through (3.4-7), (3.4-11), and (3.4-13).

In summary, the procedure to obtain $K_{junction}$ for a tee will be listed. Although the example previously discussed is for dividing flow with pipes of the same area, the procedure is applicable for dividing, merging, and converging flow with pipes of different areas. The steps are as follows:

1. Set up the standard Bernoulli equation plus the effects of form loss for the tee.

2. Calculate the desired ΔP using this equation and Idelchik ($K_{Idelchik}$).

3. Either by setting up a stand-alone RELAP5-3D© model with $K_{junction} = 0$ or by doing hand calculations of the crossflow configuration for the tee, determine $K_1 + K_2$.

4. Determine the input form loss ($K_{junction}$) to the RELAP5-3D© model from the equation

$$K_{junction} = K_{Idelchik} - (K_1 + K_2) = K_{Idelchik} - K_{RELAP5-3D©} \quad . \tag{3.4-15}$$

The example presented here is for s = 0 (uses momentum flux in both the to volume and from volume) for the crossflow junction. In earlier code versions with the right angle connection from volume 5 of pipe 2 to face 4 of volume 3 of pipe 1 being indicated as crossflow, s = 1 would have been the way to indicate the crossflow. Now s = 1 only turns off momentum flux in the to volume, whereas in earlier versions it also turned off gravity, wall friction, etc., in the to volume. It is obvious that setting s = 1 will affect the results of the example presented here (used s = 0). The terms $v^2_{f,\,1-03,\,y}$ and $difvfx_{1\text{-}03,y}$ will both be zero. The procedure would need to be repeated with s = 1 to see the effect. The current recommendation is to use s = 0 if the to volume momentum flux in the crossflow direction is important and to use s = 1 if the volume momentum flux in the crossflow direction is not important.

Although it might appear easier (in terms of determining the K loss) to connect volume 5 of pipe 2 to either face 1 or face 2 of volume 3 of pipe 1, it is not the recommended way. Connecting to face 4 allows the user to input the correct crossflow length which then allows a more correct inertia term and wall friction term in the cross-direction. As shown in **Table 3.4-1**, **Table 3.4-2**, and **Table 3.4-3**, the volume velocities in volume 3 of pipe 1 are affected. Given the geometry of a tee, connecting to face 4 is the more intuitive way to connect to volume 3 of pipe 1.

Example 2--Parallel Paths

Some simulation problems may involve relatively minor differences in otherwise similar parallel flow paths. These differences may result from geometrical or boundary condition differences. Consider, for example, a core with an inlet flow blockage affecting 25% of the core cross-section. To model this situation, the core region may be subdivided into "blocked" and "unblocked" regions. An example nodalization to model this situation is shown in **Figure 3.4-7**. Components 100 through 150 represent the blocked region, 200 through 250 the unblocked region. Inlet flow enters only at component 200. The crossflow model may be used to cross-connect these parallel flow paths that are hydraulically similar. Normal junctions are used to connect the cells in the primary flow direction (e.g., 110 to 120); crossflow junctions are used to connect cells transversely (e.g., 210 to 110). Note that it is also possible to use pipe components in this application since crossflow junctions may be connected to the internal pipe cells. With the nodalization shown in **Figure 3.4-7**, fluid mixing will occur between the "blocked" and "unblocked" regions of the core, providing a simulation of the flow distribution.

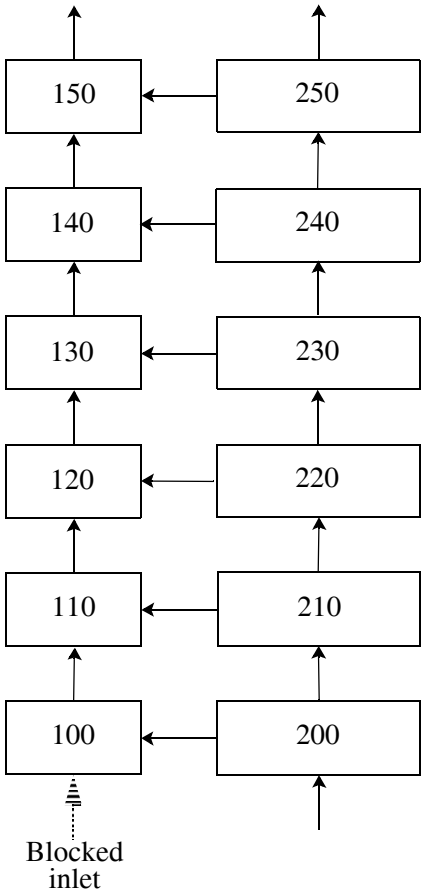

Figure 3.4-7 Crossflow-connected core application.

3.4.6 Countercurrent Flow Limiting Model

The CCFL model is a new model in RELAP5-3D© that was not available in previous code versions. The CCFL model should prove valuable for simulating countercurrent flow problems; with previous code versions, these phenomena were controlled by the standard RELAP5-3D© interphase drag model.

Example applications where CCFL may be a controlling phenomena are

- U-tube steam generator reflux cooling mode. Condensate inside the U-tubes must flow out of the tubes against steam flowing to be condensed. CCFL is likely at the tube inlets.

- U-tube steam generator liquid holdup. When natural circulation loop flow is lost during a LOCA, draining of the U-tube upflow leg is opposed by steam flow. CCFL is likely at the tube inlet and in the vertical section of the hot legs.

- Once-through steam generator auxiliary feedwater penetration. Feedwater injected at the top of the tube bundle must penetrate downward into the bundle against steam flow from the lower bundle region. CCFL is likely at the broached-hole tube support plates.

The CCFL model is implemented at a junction by specifying f = 1 in the "jefvcahs" packed junction control word. The Wallis and Kutateladze CCFL correlations (and a Bankoff weighting of the two) are available. The desired correlation and parameters are specified on the optional junction CCFL data cards. These cards are of the format CCC1401 through CCC1499 for pipe component junctions, CCC0110 for single-junction and valve components, CCCN110 for branch component junctions, CCC0110 for pump inlet junctions, and CCC0111 for pump outlet junctions. In these formats, CCC is the component number and N is the branch junction number. It is important to recognize that the validity of results produced using the CCFL model (assuming it engages during a calculation) is strictly dependent upon the applicability of the model constants used. The user should be able to justify the constants used based on some experimental data relevant to the geometry being modeled.

While the junction CCFL data card is termed "optional," the junction hydraulic diameter is specified on the card. If the card is not input, then a default junction hydraulic diameter, based on a circular junction flow area, is used. For noncircular geometries, and for "lumped-loop" situations, the code-calculated default junction hydraulic diameter will not be correct. The junction hydraulic diameter is used in the formulation of interphase drag for all junctions, not just at junctions where the CCFL model has been implemented.

3.4.7 Control System Modeling

RELAP5-3D© control variables provide a general capability for modeling interactions among the various types of calculated parameters. Control variables may be used to relate the condition of thermal-hydraulic variables (e.g., temperatures, pressures, and flow rates) with the status of trips. Control variables also provide a general data manipulation capability. Calculated data may be summed, multiplied, divided,

differentiated, integrated, lagged, or raised to a power. Because the responses of the control variables may themselves be interrelated, the response of an actual control system may be simulated.

In a RELAP5-3D© problem, control variables are typically employed in three types of applications: (a) to include useful "side" calculations in a problem, (b) to specify complex boundary conditions, (c) to simulate the response of a prototype control system during a calculation. Examples of these types of applications are provided in the following sections. Specific descriptions of the control variable types and details of the input required appear in Section 4.10.

3.4.7.1 Useful Side Calculations. Control variables let the user manipulate data during a calculation and display the resulting response in the printed and plotted output. These data manipulations during the calculation often aid analyst understanding and reduce post-processing effort.

Examples where side calculations may be useful include tracking of steam generator secondary side mass, integrated injection flow, integrated break flow, and total steam generator heat transfer rate. In some instances, these data manipulations can be performed following the calculation by operating on the data file. For integrated data, the side calculation is necessary or the correct data will be lost.

To illustrate situations where side calculations are needed, consider the integrated break flow parameter. A side calculation of integrated break flow is included in the problem (through an integral control variable operating on the break junction mass flow rate). The integrated break flow will be calculated during each time step of the problem and its value will appear on the calculation restart/plot file. The frequency of the data points on the restart/plot do file will be the minor edit frequency. If this side calculation is not included in the problem, then integrated break flow must be approximated by integrating the minor edit mass flow rate data using a post-processing routine. However, the true integrated break flow data are lost because the data on the restart/plot do not include the time steps between the minor edits. Therefore, if a side calculation is not performed during the calculation, the integrated data are lost. To recover it would require rerunning the problem with the side calculation implemented.

An example of using control variables for side calculations is shown in **Figure 3.4-8**. In this example, control variable 7 has been developed to calculate the mass on the secondary side of a steam generator. The control variable adds the products of the densities and volumes of each of the 14 hydrodynamic volumes in the model of the steam generator secondary. The densities are accessed through the specification "rho" followed by the identifier of the hydrodynamic volumes. Note that references to these densities will be SI in units (in this case, kg/m^3) regardless of the units specified for the problem on the units selection control Card 102. Overlooking this fact is a common cause of modeling error. Accordingly, in this example, the volumes of the hydrodynamic cells are specified in m^3. Since this model was based on British units, the resulting mass in kg is converted to lb_m using the conversion factor 2.2046 on Card 20500700. Note the descriptive name "sgcmass" is specified to recognize the control variable information in the printed output.

```
$**********************************************************************
$ steam generator c secondary side mass                                *
*----------------------------------------------------------------------*
*ctlvar      name        type      factor      init       f      c
20500700   "sgcmass"     sum       2.2046     93260.      0      0
*
*ctlvar      a0      coeff      variable name      parameter no.
20500701     0.0     15.52          rho            454010000
20500702              5.11          rho            458010000
20500703              3.98          rho            462010000
20500704              1.26          rho            462020000
20500705              1.26          rho            462030000
20500706              0.97          rho            462040000
20500707              7.90          rho            466010000
20500708             10.26          rho            466020000
20500709             10.40          rho            466030000
20500710             10.74          rho            466040000
20500711             10.73          rho            470010000
20500712             14.17          rho            474010000
20500713             19.75          rho            478010000
20500714             19.68          rho            482010000
$**********************************************************************
```

Figure 3.4-8 Example of using control variables for side calculations.

3.4.7.2 Specifying Complex Boundary Conditions. Control variables may be used to impose virtually any boundary condition on a problem. Boundary conditions may be tailored to suit the calculation desired based on user input (e.g., from a table), the current status of any variable in the problem, or a combination of these factors.

To illustrate the power of control variables for specifying boundary conditions, consider the following example. Fluid inventory in a plant system is controlled by makeup and letdown systems; makeup injects fluid and letdown extracts fluid. In the plant, the letdown flow is returned to a 2,000-gal makeup tank through a cleanup system. During normal operation, the makeup and letdown flows are balanced. In the model, however, these systems are modeled as “open loop.” The makeup system was modeled using a pump that draws fluid from a TMDPVOL, and the letdown system was modeled using a trip valve that allows flow into another TMDPVOL. The decision to use an open loop model rather than a comprehensive closed loop model of the system was made because of the complexity of the cleanup system and incomplete information on its details. Moreover, in this particular case, complete modeling of the cleanup system was deemed unnecessary and representing it with the boundary conditions was considered adequate.

With the open loop modeling concept, however, a dilemma arises. During a transient, the letdown flow will be terminated and the makeup system will draw down the inventory in the makeup tank. When the tank is empty, the makeup flow will cease. By employing the control variables and trips shown in **Figure 3.4-9**, this makeup flow termination was realistically included in the simulation.

Trip 550 is used to determine the letdown status. Letdown flow is to be terminated when the pressure at the core inlet (p 505010000) falls below 3.42178 MPa. Prior to that occurrence, trip 550 is false, afterwards it is true. The status of this trip is used to control the letdown valve position. The valve is open when trip 550 is false and closed when trip 550 is true. Valve control is accomplished by using a trip valve that references the inverse of trip 550 (specified as -550).

Trip 550 also is used to provide a binary indication of letdown isolation; this is accomplished with trip unit control variable 801. As shown in **Figure 3.4-9**, this control variable will have a value of 0 until trip 550 latches true (when letdown is isolated) and a value of 1 thereafter.

Control variable 802 is defined as the mass flow rate of the makeup injection junction (mflowj 850010000). Control variable 803 is defined as the product of the mass flow rate and the binary operator (control variable 801 x control variable 802). Control variable 803 thus has a value of 0 up to the time of letdown isolation, then a value equal to the makeup injection mass flowrate (in kg/s) thereafter. Control variable 804 integrates control variable 803; as a result, the value of control variable 804 represents the integrated makeup injection flow subsequent to letdown isolation. Using trip 551, the value of control variable 804 is compared against 8,358.4 kg (the mass equivalent of the 2,000-gal initial tank inventory assuming constant temperature and pressure in the tank). When the integrated injection flow exceeds this value, trip 551 turns true and is used to trip the power to the makeup injection pump.

3.4.7.3 Modeling Prototype Control Systems. Control variables may be used to model virtually any prototype control system. Control systems modeling generally is limited by the availability of control process diagrams and information on the actual set points and gains, rather than by the capabilities of the RELAP5-3D© control variable models.

To illustrate the use of control variables for modeling prototype control systems, consider a prototype pressurizer level control system. The control system determines a pressurizer indicated level based on the difference between the pressures sensed at pressure taps near the bottom and top of the pressurizer. The indicated level is first lagged, based on instrument response time, and then compared against a “set point” level that varies as a function of the highest average (of the hot and cold leg) temperature of the three coolant loops in the plant. The resulting error between the indicated and set point levels is processed through a proportional-integral controller whose output is used to vary the makeup pump speed. If the level indication is low, the control system response is to increase the makeup flow to correct it.

The control variable logic shown in **Figure 3.4-10** was developed to model the response of the system described in the preceding paragraph. Control variable 200 determines the set point level as a function of the highest average temperature. In previous logic (not shown), the hot and cold leg fluid temperatures in each of the three loops were independently averaged and an auction process selected the

```
*
*-----------------------------------------------------------------------------------*
*                                trip input
*-----------------------------------------------------------------------------------*
0000550      p      505010000   lt   null   0   3.42178e6   1   -1   *letdown isolation
0000551      cntrlvar      804     gt     null     0     8358.4    1    -1.    *mu tank empty
*
*-----------------------------------------------------------------------------------*
*                          control variable input
*-----------------------------------------------------------------------------------*
*
*ctlvar        name         type         factor         init         f    c         min         max
20580100  "binary"     tripunit          1.            0.          0    3          0.           1.
*
*ctlvar        trip no.
20580101        550
$=================================================================$
*ctlvar        name         type         factor         init         f    c         min         max
20580200    "flow"        sum            1.        14.4792     0    0
*
*ctlvar                a0          coeff             variable name        parameter no.
20580201              0.            1.                  mflowj             850010000
$=================================================================$
*ctlvar        name         type         factor         init         f    c         min         max
20580300    "flow"        mult           1.            0.          0    0
*
*ctlvar        variable name     parameter no.     variable name     parameter no.
20580301        cntrlvar              801               cntrlvar              802
$=================================================================$
*ctlvar        name         type         factor         init         f    c         min         max
20580400  "intflow"    integral          1.            0.          0    0
*
*ctlvar        integrand name         integrand no.
20580401          cntrlval                   803
$=================================================================$
```

Figure 3.4-9 Example of using control variables for specifying complex boundary conditions.

highest of the three average temperatures. In the example, this highest average temperature was previously defined using control variable 104. The coefficients prescribed in control variable 200 operate on this temperature to define the pressurizer set point level. Initially (assuming full power temperatures), the set point level is 0.533, or 53.3% of full scale.

Control variable 201 calculates the pressurizer indicated level based on the difference between the pressures at the elevations of the prototype pressure taps. In this example, the location of the lower tap was defined to be at the center of hydrodynamic cell 341070000. However, the elevation of the upper tap was between the centers of two of the cells in the model (341010000 and 340010000). Thus, the pressure at the upper tap is based on an elevation-weighted average of the pressures in these two cells.

The instantaneous value of the pressurizer indicated level (control variable 201) is lagged, based on the response time of the instruments, in control variable 202. The level error is then determined by subtracting the lagged indicated level from the set point level in control variable 203. In turn, the level error is processed by the proportional-integral operator in control variable 204. The output from this processor is a change in makeup pump speed. If the makeup pump is modeled explicitly, control variable 204 is then used to modify the pump speed on each time step. If, instead, the makeup system is simply modeled using a TMDPJUN, the effect of the change in pump speed is correlated into a corresponding change in flow and the junction flow is modified accordingly.

It should be noted here that RELAP5-3D© is, in effect, performing a digital simulation of a control system. Therefore, the "sampling rate" of the simulation is dictated by the size of the time step. It bears no relationship to the true sampling rate of the system being modeled. However, this is probably of no material significance since the time constants of the system being modeled are at least an order of magnitude larger than either the time steps taken by RELAP5-3D© or the actual sampling rate in the plant system.

3.4.8 Level Tracking Model

Accurate modeling of liquid levels is essential for some applications of RELAP5-3D© . Because the discretization of the governing equations uses mean void fractions in each control volume, a fine nodalization is required to resolve a large change in void fraction, such as is associated with a liquid level. Even that may not be adequate to model the phenomena, because RELAP5-3D© uses a highly diffusive upwind difference scheme to discretize the advection terms. To compensate for the inherent limitation of the finite-difference scheme used in RELAP5-3D© and to allow a coarser nodalization to reduce the computational cost, a mixture level tracking model is available in RELAP5-3D© . A detailed description of the model and its application is presented in Section 3 of Volume I of this manual. The volume control flag l from the flags "tlpvbfe" is used to activate the level tracking model as described in Volume II of the manual. If more than one junction is connected to the top or if more than one junction is connected to the bottom, the mixture level tracking model is not used and is turned off.

```
$**********************************************************************
$the following control variables - 200 through 206 - represent the pressurizer level
$control system.
*----------------------------------------------------------------------------------------------------
*ctlvar      name        type      factor      init      f   c      min      max
20520000  "pzr sp lvl"   sum        1.0       0.533      0   3     0.222    0.533
*
*ctlvar                  a0        coeff          variable name            parameter no.
20520001            -6.03230    1.14338e-2        cntrlvar                     104
$**********************************************************************
*ctlvar      name        type      factor      init      f   c
20520100  "pzr sp lvl"   sum        1.0      0.227118    1   3   0.0    1.0
*
*ctlvar                  a0        coeff          variable name            parameter no.
20520101            -0.20759    2.21849e-5            P                    341070000
20520102                        -1.18443e-5           P                    340010000
20520103                        -1.03406e-5           P                    341010000
$**********************************************************************
*ctlvar      name        type      factor      init      f   c      min      max
20520200  "pzr level"    lag        1.0      0.227118    1   3     0.0      1.0
*
*ctlvar                 tau-1                    variable name            parameter no.
20520201               0.786                       cntrlvar                    201
$**********************************************************************
*ctlvar      name        type      factor      init      f   c
20520300  "pzr lsp-l"    sum        1.0        0.0       0
*
*ctlvar                  a0        coeff          variable name            parameter no.
20520301                0.0         1.0             cntrlvar                    200
20520302                           -1.0             cntrlvar                    202
$**********************************************************************
*ctlvar      name        type      factor      init      f   c
20520400  "cvcs d rpm"  prop-int    10.0        0.0       0   3  -0.50649  3.0
*
*ctlvar          prop gain          int. gain      variable name            parameter no.
20520401            1.0             5.55556e-3       cntrlvar                    203
```

Figure 3.4-10 Example of using control variables in modeling actual control systems.

3.4.9 Thermal Stratification Model

Because RELAP5-3D© uses a first-order upwind differencing scheme that has considerable numerical diffusion, there is significant mixing of hot and cold fluid on some applications of the code. This has an unfavorable effect on the accuracy of the solution. To counteract this, the thermal stratification model was developed with the following features:

- Have a sharp temperature profile that will separate the hot fluid from the cold fluid whenever thermal stratification occurs.
- Correct donoring of liquid specific internal energy at the junctions for the cell where the thermal stratification occurs.
- Only the hot fluid in a cell that contains the thermal front is allowed to flash.

The volume control flag t from the flags "tlpvbfe" is used to activate the thermal stratification model as described in Section 3 of Volume I of the manual.

3.4.10 Reference

3.4-1. I. E. Idelchik, *Handbook of Hydraulic Resistance,* 3rd Edition, Boca Raton, FL: CRC Press, 1994.

4 Specific Practices

This section discusses practices for applying RELAP5-3D© . Specific guidance is provided for applying each of the submodels in the code. The discussion is organized in the same order as the list of input requirements in the user input section of the code manual. The organization generally also follows the recommended sequence of data in an input deck.

4.1 Problem Control Options

The following sections describe the various problem control options that are selected by a series of control cards. For convenience, it is recommended that these cards appear at the beginning of an input listing.

4.1.1 Format Considerations

Input data typically are submitted using an 80-column format. It is recommended that the first card of an input stream be the title card. A title card is identified using an equal sign as the first nonblank character. It is recommended that the title card be descriptive of the input stream. A descriptive title might specify the facility, the purpose of the deck, and an additional identifying feature such as a date. To illustrate, consider the title: “=Zion-1 PWR, full power steady-state, 1-30-90.” In addition to its appearance at the beginning of the input listing, the title specified will also appear as a heading on the major edits in the printed output.

Despite the effort involved, it is highly recommended that input streams be well-commented. Comment cards may be inserted at any location in an input stream by using an asterisk or dollar sign as the first nonblank character on a data card. Comments may also be appended following the entry of data on any card by using either of these characters. All fields on the card following an * or $ are read as comments by the code.

The card identification number, the first entry on each card, is the key to code interpretation of the data entered on the cards. It is recommended, but not necessary, that the input data stream be organized by increasing card number. Input of real numbers may be accomplished using any standard FORTRAN notation (e.g., acceptable inputs for the number 12.45 include +12.45, 0.1245 + 2, 1.245 + 1, 1.245 1, 1.245E + 1, and 1.245D + 1). Alphanumeric entries with embedded blanks must be enclosed using quote (") or apostrophe (') delimiters. Data may be continued from one card to another using a plus sign (+) as the first field of the next card (a card number is not required on the continuation card). The total number of words on a card and its continuation cards may not exceed 2,047. Data fields must be complete on each card (i.e., a field cannot be started on the original card and completed on the continuation card). Where possible, it is recommended that continuation cards not be used to increase analyst understanding of an input stream and reduce interpretation errors.

The input stream is terminated with a card containing a period or forward slash as the first entry. The data input stream is therefore limited to all data preceding the terminator card (note that the title card,

identified by the equal sign, does not need to be the first card of the input stream). To highlight the presence of the terminator card, it is recommended that it be commented (e.g., ". *end of input").

The sequential expansion format for data entry is described in Appendix A of the input data requirements manual (Volume II). This format provides an efficient method for entering certain data and it is recommended that it be used where available.

4.1.2 Problem Type -- Card 100

The most common RELAP5-3D© calculation types are NEW, RESTART, and STRIP. The NEW option is used for problems where a complete input stream is specified. With this option, initial conditions for all model features (e.g., volumes, junctions, heat structures, control variables, and trips) must be specified on the input cards.

The RESTART option is used where a previous calculation (either NEW or RESTART) has been performed and the current problem is to be an extension of that calculation. A RESTART calculation may be simply an extension of a previous calculation. If this is the case, the input stream only needs to contain the control cards to effect the continuation of the problem. Often, however, changes in the model are desired at the time of restart and RELAP5-3D© offers considerable flexibility for making such changes. Virtually any model change may be made when restarting a previous problem. To effect a change, the model feature is simply re-input as a part of the restart problem input stream. Any changes made are considered permanent (i.e., once a change is made it will remain a part of a problem unless further modified in a later restart run). Conversely, any model feature not changed in a restart calculation is assumed to exist as originally or last specified and is initialized based on the conditions present at the restart time from the preceding calculation. When making changes on restart, care should be taken to ensure that the initial conditions of the features changed are consistent with those from the original problem at the restart time. Care should also be taken to determine all possible effects of any changes made.

The STRIP option is used as a post-processor for "stripping" the data for a limited number of data channels (e.g., 10 pressures, 15 temperatures, 14 flow rates, and 10 control variable values) from the restart-plot file. The strip option is used to create a file containing only pertinent data. This new file is therefore of a more manageable size than the restart-plot file. Considerable efficiency is gained by stripping the desired data; the memory requirement for an external plotting routine and the computer time required to execute it are both reduced.

For NEW problems, either the TRANSNT or STDY-ST options may be used. For reasons discussed in Section 3.1.3.2, it is recommended that the STDY-ST option not be used.

4.1.3 Input Check/Run -- Card 101

This optional card allows the user to stop a calculation following completion of input processing and before execution of a transient or steady- state problem solution. If Card 101 is not present, the RUN option is assumed; if the card is present, RUN or INP-CHK may be selected.

As described in Section 3.1.2, stopping a calculation after successful completion of input processing may have some benefit as a part of the model debugging process. It is recommended, however, that models be debugged in the TRANSNT mode using the RUN option, being careful to specify an appropriate maximum computer usage time on Card 105 (see Section 4.1.6). With this method, the model input is iteratively debugged in the RUN mode (input processing routines are the same in the RUN mode as in the INP-CHK mode) by repeatedly running and correcting the model until all input errors are removed. When all input errors have been removed, an initial transient calculation is automatically performed. This initial transient calculation often provides an advance indication of additional modeling errors beyond those that can be diagnosed by the RELAP5-3D© input processor. If the input check option is used, a separate computer job is required to start the transient or steady-state calculation.

4.1.4 Units Selection -- Card 102

Optional Card 102 lets the user specify the calculational units for a problem. SI units are assumed if Card 102 is not input. A units specification is made for both the input (model input stream) and output (printed).

Several peculiarities of the units assumed by the code are described in Appendix A of the user input data requirements manual (Volume II). Additionally, the user should carefully consider the input units requirements specified in the same manual. These requirements are identified in parentheses next to each input listing.

All internal RELAP5-3D© calculations and all data storage on the restart-plot output file are in SI units, regardless of the options selected on Card 102. The user is cautioned of two situations where unit difficulties may arise. Note that both these difficulties may be avoided if a problem is performed using SI units exclusively; therefore, if at all appropriate, SI units are recommended.

First, references to code parameters within control variable specifications are considered an internal code calculation and SI units are assumed. For example, in a control variable reference to p 120010000, the pressure in volume 12001 will always be returned as pressure in Pascals. The control variable specification provides sufficient capability to convert to British units if the user desires. Difficulties arise, however, if a problem is being performed in British units and the user fails to remember that the code internal units are SI.

Second, all data written to the restart-plot file are in SI units. Conversion of an output channel to British units therefore requires a STRIP calculation followed by an external conversion of SI to British units.

4.1.5 Restart Control -- Cards 103 and 104

For a restart problem, the restart number from a previous calculation can be specified on Card 103; the number to place on this card is the “restart number” (not the “block” number) appearing in a restart edit of the previous calculation's printed output. The number -1 can also be specified on Card 103; this indicates the restart is to begin from the last restart dump on the RSTPLT file. The restart time can also be specified on Card 103; the time to place on this card is the “restart time” appearing in a restart edit of the previous calculation’s printed output. The number -1.0 can also be specified on Card 103; this indicates the restart is to begin from the last restart dump on the RSTPLT file. When the restart edit is generated at the same time as a major edit, the restart data appear after the major edit data. Card 104 provides a mechanism for preventing the writing of a restart-plot file if so desired.

A restart problem is simply an extension of a previous calculation, beginning from the exact conditions present at a restart edit in that calculation. Note that the previous calculation may be restarted from its end point (a restart edit is automatically generated when a calculation terminates) or any previous restart edit. The user is cautioned, however, that the restart edit created when a calculational failure occurs is unreliable as a restart point because the calculated parameters reflect the failed conditions. For restarting following a code failure, the user must use the restart edit previous to the terminating edit. Therefore, good practice includes specifying frequent restart edits so that code failures may be circumvented without extensive recalculation. However, this practice can result in very large restart files. If the calculation seems to be running smoothly, the restart edit frequency can be decreased.

A restart problem may be run “as is” (i.e., all features of the problem remain the same) or changes may be made in the model or its conditions at the time of restart. Any changes made upon restarting become a permanent part of the problem and do not need to be respecified on subsequent restarts. A restart input deck is quite abbreviated, consisting only of problem control cards, time step control cards, and cards specifying any changes desired. Virtually any change may be accomplished at the time of restart. Generally, to effect a change in a model feature it is necessary to reinput all cards needed to specify that feature. For example, if the volume of a single-volume component needs to be changed, then all cards needed to input that single-volume must be reinput even though only one variable is changing. When reinputing data at a restart point, the user is cautioned to carefully respecify its initial conditions. These are shown in the major edit data at the restart point (for this reason, it is recommended that the same frequencies be specified for restart and major edits).

4.1.6 Central Processing Unit Time Control -- Card 105

Optional Card 105 provides a means for terminating a calculation internally to RELAP5-3D© , based on the approach to a computer time usage limit. The use of this card is highly recommended to promote a “normal” termination. If a calculation is terminated externally (because, for example, the computer time expended reaches the maximum specified on an external job card) then a loss of the output data is likely. Card 105 provides a means of terminating a job based on an internal central processing unit (CPU) time limit. If required by the operating system, an external time limit is set to be higher than the internal time limit.

Three inputs are needed on Card 105. Words 1 and 2 are time differentials (Word 2 should be larger than Word 1) and Word 3 is the maximum CPU time allowed. Following each time step, a check is made to determine if the CPU time used to that point is greater than Word 3 minus Word 1. If so, the calculation is terminated immediately. A test is also performed to determine if the CPU usage has reached a value of Word 3 minus Word 2. If so, the job is terminated when the calculation has progressed to the next time corresponding to a minor edit point.

As an example, consider a calculation that a user would like to span a transient time from 0 to 100 seconds. Based on experience, the user believes the calculation will require about 500 CPU seconds. To run this calculation, the user will use an end time of 100 seconds on the last of the 201 - 209 time step control cards. On Card 105, the user might input the times 10, 20, and 700. On the external job card, an 800-second time limit might be specified. By doing this, the user has maximized the opportunity for a successful run to 100 seconds while limiting the exposure to excessive computer costs if the calculation proves to proceed less efficiently than expected. First, the user has likely provided sufficient time for the calculation to reach the 100-second transient time. By specifying a maximum internal limit of 690 CPU seconds (700 - 10), the run will be terminated internally and therefore output files will be orderly. The user has provided 10 CPU seconds (20 - 10) to reach the next minor edit point once 680 CPU seconds have been expended. Therefore, it is likely that either the problem will be executed to completion, or if not, a fully-useful restart point will be generated to facilitate continuation of the problem.

An estimate of the CPU time needed to perform a calculation may be made by starting with a known reference point (i.e., the time needed to run a similar problem on the same computer) and linearly scaling the CPU time (a) proportionally by the number of hydrodynamic cells in the problem, (b) proportionally by the requested problem time, and (c) inversely proportional by the requested or expected time step size. As indicated above, if the user has a reasonable estimate of the CPU time required for his problem, then considerable efficiencies in the execution of the problem are possible.

4.1.7 Noncondensable Gas Type -- Cards 110 and 115

These cards specify the presence and composition of a noncondensable gas. The user input requirements document description (Volume II, Appendix A) for these cards is self-explanatory. The user is cautioned that the noncondensable model has only limited user experience. A basic description of the noncondensable model appears in Section 3.4.3.

Currently available noncondensable gases are argon (specified as ARGON), helium (HELIUM), hydrogen (HYDROGEN), nitrogen (NITROGEN), xenon (XENON), krypton (KRYPTON), air (AIR), and sulphur hexafloride (SF6).

4.1.8 Hydrodynamic System Definitions -- Cards 120 through 129

These optional cards enable the user to specify the working fluid within each independent hydrodynamic system in a model. For systems employing only light-water (as is most commonly the case), these cards are not required. For situations where other fluids are used, one card should be entered for each

independent hydrodynamic system in the model. The word "independent" implies that there is no possibility of flow between the two systems. For example, the primary and secondary systems of a steam generator are normally independent systems. However, for the simulation of a steam generator tube rupture event when the two systems are hydraulically coupled through a break path, the two systems are no longer independent. Flow between systems using different working fluids is not allowed with RELAP5-3D© .

Currently available working fluids are light water (specified as H2O), heavy water (D2O), 1984 light water (H2ON) , and 1995 light water (H2O95). The user is referred to the cautionary notes regarding this input in Appendix A of the user input requirements document (Volume II, Appendix A).

4.1.9 Self-Initialization Options -- Cards 140 through 147

A common modeling task, and one that can consume excessive time and funds, is obtaining a satisfactory steady-state condition for a system model. A steady initial condition usually is needed as a starting point for transient calculations. Standard controllers have been installed into RELAP5-3D© to facilitate the calculation of a PWR steady operating condition. These standard controllers are referred to as the "self-initialization" options.

The self-initialization options are invoked by entering Cards 140 through 147. These options provide for specifying pump speed, steam flow, feedwater flow, and pressure controllers. The numbers of each type of controller are described on Card 140. The remaining cards indicate the components where the control is to take place and a reference to a control variable where the requisite constants and functions are calculated and stored. Cards 141 and 142 provide this information for the pump controllers, Cards 143 and 144 for the steam flow controllers, Cards 145 and 146 for the feedwater flow controllers, and Card 147 for the pressure controller. Detailed information explaining the use of control variables is found in Section 4.10.

The application of the self-initialization controllers for a typical (U-tube type steam generator) PWR steady operating condition is briefly described as follows. To begin, a constant core power is input using a table entry. The primary coolant system pressure is controlled using a pressure controller at a location where the pressure is well known (e.g., in the pressurizer or at the core outlet). Pump controllers are used to adjust the primary coolant pump speeds so that the desired core flow rate is maintained. In most cases, the coolant loops are identical; therefore, all primary coolant pumps are driven at the same speed. The feedwater injection flow rates are controlled so that setpoint steam generator indicated levels are maintained.

The steam flow controllers may be used in two different ways, both of which result in the total heat transfer rate through the U-tubes of all steam generators equaling the core power. First, the steam flow may be adjusted based on the cold leg temperature error. With this method, the resulting steady-state will possess the proper hot and cold leg temperatures but the steam generator secondary pressure may not be as desired. Second, the steam flow may be adjusted such that the desired steam generator secondary pressure is attained. With this method, the resulting steady-state will possess the proper steam generator secondary

pressures, but the hot and cold leg fluid temperatures may not be as desired. The modeling difficulty reflected here primarily concerns the calculation of the heat transfer process on the secondary side of the U-tubes. Specifically, flow patterns in the tube bundle region are highly complex.

The code-calculated heat transfer coefficient on the outside of the tubes is generally too small. As a result, when the primary-side temperatures are correct, the secondary-side pressure needed to remove the core power is too low. A model adjustment that has been found effective for correcting this disparity is to adjust the heated diameter specified on the secondary-side of the tubes. If the classically-calculated heated diameter (i.e., four times the flow area divided by the heated perimeter) is replaced with the tube-to-tube spacing, then good agreement with plant data is obtained for both the primary-side fluid temperatures and the secondary-side pressures. Here, the meaning of "tube-to-tube spacing" is the minimum fluid gap width between the outside surfaces of two adjacent steam generator tubes. Note that this recommended change affects only the heated diameter specified on the outer tube surface; no change is made to the hydrodynamic volume hydraulic diameters.

The selection of appropriate gains for the various controllers is largely a trial-and-error process. An initial gain is selected, the controller response is monitored, and the gain is adjusted based on any indications of under- or over-damping. In the terminology of the self-initialization controllers, the integral part of the time-constant is the inverse of the gain. Therefore, an increased gain results in a smaller time-constant and more rapid controller response.

A complete discussion of the self-initialization controllers may be found in **Reference 4.1-1**. The user should note that these controllers have potential for uses other than the self-initialization of a model. For example, the pump controller may simplify the modeling of a pump whose speed is controlled based on a complex combination of inputs.

4.1.10 Reference

4.1-1. G. W. Johnsen et al., *Self-Initialization Option for RELAP5/MOD2*, EGG-RTH-7381, Idaho National Engineering Laboratory, September 1986.

4.2 Time Step Control

Cards 200 through 299 are the time step control cards.

Optional Card 200 lets the user define a problem time other than zero at the beginning of a NEW type problem. This is a very useful feature because a problem start time can be normalized to any convenient reference. Examples where this capability is needed include resetting the problem time to zero when a satisfactory model steady initial condition has been attained and normalizing the problem start time with a nonzero reference time in external data, such as when simulating an experiment that starts at 200 seconds.

Cards 201 through 299 contain data that control the time steps used and the output generated as a problem progresses. At least one card is needed for NEW problems. For RESTART problems, if these

cards are input they replace the entire series of 201 through 299 Cards in the preceding calculation. It is generally recommended that at least one 201 through 299 Card be entered in RESTART problems.

Seven words are entered on these cards. Word 1 defines the end time of the interval for which the data in the following words is used. The calculation proceeds either from time zero, from the restated initial time on Card 200, or from the restart time and proceeds to the time specified in Word 1 of Card 201. When that time has been reached, control of the problem is based on the data on Card 202, and so on until the time on the last of Cards 201 through 299 is reached when the job is terminated. Regardless of the specifications provided in Words 2 through 7, minor edit, plot, major edit, and restart edits are generated by the code at the end of every time interval specified on a 201 through 299 Card.

Word 2 on the 201 through 299 Cards represents the minimum time step. From experience, a value of 1.0e-7 or 1.0e-8 seconds is recommended. Using the default of 1.0e-6 seconds occasionally causes calculational difficulties. While smaller values may be needed in some applications, for economic reasons the user will want to first verify that such a small value is warranted.

Word 3 represents the maximum (or requested) time step. If calculational difficulties are encountered, a reduction in the maximum time step size often remedies them. A maximum time step size of the Courant limit (but not larger than 0.2 seconds) is recommended. A discussion of time step selection appears in Section 3.1.3.1.

Word 4 is the packed-word "ssdtt" that specifies the code control and output functions. In general, the option 00003 (or simply 3) is recommended. A short discussion of how this option may be varied to obtain expanded data output for problem diagnoses appears in Section 3.1.3.1.

Words 5, 6, and 7 specify the minor, major, and restart edit frequencies as integer multiples of the maximum time step size from Word 3. For example, with a maximum time step size of 0.1 second, a minor edit frequency of 10, a major edit frequency of 100, and a restart frequency of 200 then the code will generate minor edits every 1 second, major edits every 10 seconds, and restart points every 20 seconds.

It is recommended the user select a minor edit frequency for an appropriate plot output frequency, a major edit frequency for an appropriate phenomena "snapshot" frequency, and a restart edit frequency for an appropriate "backup following failure" frequency as described in Section 3.1.3.1.

4.3 Minor Edit and Expanded Edit/Plot Variable Requests

4.3.1 Minor Edit Requests

Cards 301 through 399 are reserved for minor edit requests. Requesting a minor edit simply results in a display of the specified parameter in the printed output. As described in the previous section, the minor edit data will be printed at an interval prescribed on the 201 through 299 Cards; the interval is defined by the product of the maximum (or requested) time step size and the minor edit frequency. The frequency of data entries on the restart-plot file will be the same as for the printed minor edits. However, it is a common

misconception that a data channel must be requested as a minor edit variable in order to have that data written to the restart/plot file. Data for virtually all calculated parameters (exceptions are discussed in Section 4.3.2) are written to the restart/plot file regardless of what, if any, minor edit requests are specified.

The minor edit request is entered by a card number from 301 to 399 followed by two fields that specify the data channel. For most data these fields reflect the data type and data location. For example, the pressure in cell 3 of pipe component 125 would be specified as “p 125030000".

Two common input errors are encountered when specifying minor edits. First, when requesting the “Component Quantities” listed in Section A-4, the location identifier is simply the component number, not the typical cell number as was used in the example above. When requesting the pump velocity for pump component 255 the proper specification is PMPVEL 255. A common error is to request “PMPVEL 255010000,” a format that is consistent with requesting most other data about the pump (such as pressures and void fractions). Second, input errors often result because the proper specification for junction data (such as mass flow rates, velocities, and void fractions) is not consistent for all types of components. If component CCC consists of only 1 junction and no volumes (single-junction, valve, and time-dependent junction), then the junction location is identified with the format CCC000000. If more than one junction may be associated with component CCC or if component CCC consists of a junction and a volume [pipe/annulus/pressurizer, branch/separator/jetmixer/turbine/emergency core cooling (ECC) mixer, pump, and accumulator], then the proper format is CCCNN0000, where NN is the junction number within the component. For the multiple junction component, the proper format is CCCIINN00, where II is the junction number within a set and NN is the set number. For the multi-dimensional component, the proper format is CCCXYYZZF, where X is the first direction junction number, YY is the second direction junction number, ZZ is the third direction junction number, and F is the outlet face number.

If minor edit requests have been entered in a NEW calculation, then they need not be re-entered on subsequent RESTART calculations. The originally-requested minor edits will appear in the output of the restart calculations. If, however, a change in the minor edit requests is made when a calculation is restarted (e.g., by adding more requests), then the entire block of desired minor edit request cards must be re-input in the restart job input stream.

It is recommended that the user employ minor edits as a useful analysis aid. In a newly assembled input deck, it is desirable to assemble a list of minor edit requests to characterize overall behavior in the model. This list might include representative pressures, temperatures, flow rates, and velocities in the important regions of the model. The list should also include the current values of any especially important control variables. In a mature input deck being used for transient calculations, the minor edits should be tailored for interpreting the transient behavior calculated. For this purpose, the minor edit request list would highlight parameters such as core power, break flow, and fuel temperatures.

4.3.2 Expanded Edit/Plot Variable Requests

A new feature in RELAP5-3D© is the capability to request that certain nonstandard additional data be printed as minor edits and added to the restart-plot file. A list of these additional data is given in Appendix A of the user input data requirements document (Volume II).

Additional data are requested by entering cards of the format 2080XXXX, where XXXX may range from 0001 to 9999. One card is used for each additional parameter and two words are entered comparably to those on the 301 through 399 Cards. Note that these parameters are not written to the restart-plot file, nor are they usable references in control variables, minor edits, or trips, unless they are included on a 2080XXXX Card.

On the additional data list, two items are of particular interest to the user. The "HTMODE" request code, followed by the appropriate parameter number, may be used to access the heat transfer mode calculated on a surface of a heat structure. This information is not available in the standard data list. The "HTTEMP" request code, followed by the appropriate parameter number, may be used to access the calculated temperature for any node in a heat structure. Without this request, only the left and right surface heat structure temperatures are stored on the restart/plot file.

4.4 Trips

Trips are binary logical operators whose status at each time step is either true or false. The value of a trip statement is that it allows this binary type of data to be fully incorporated into a calculation. A trip statement may access any calculated parameter (such as temperature, pressure, flow rate, and control variable value) and perform a comparison to judge whether the current status is true or false. Conversely, a trip status may be used to cause an action to occur in the problem (e.g., by opening a valve when a trip turns true).

RELAP5-3D© employs two basic types of trips, variable and logical. The variable trip is used to compare one calculated parameter against another (or against a constant) to determine a true or false status. The logical trip directs a combination of other trips into a new trip whose status is either true or false. When assembling trip logic, the user should remember that trip status is determined at each time step in numerical order by trip number. As a result, if a lower number trip is referenced in a trip statement, the status of the referenced trip is based on the current time step. Similarly, if a higher number trip is referenced, then the status of the referenced trip is based on the previous time step.

RELAP5-3D© trip logic may be either in the original or extended format. The original format allows for 199 variable and 199 logical trips; the extended format allows for 1,000 of each. The choice of format is dependent on whether the user anticipates a need for more than 199 of either type of trip. The original format is used unless the extended format is activated by entering the 20600000 Card. Examples presented here are in the original format.

4.4.1 Variable Trips

Variable trips, implemented using Cards 401 through 599, are used to compare one calculated parameter against another or against a constant. To illustrate the variable trip concept and some of its possible uses, consider the following example:

```
505   p 140010000 gt p 145010000 50. n -1. *delta p
```

As a logical statement, trip 505 status is determined based on the question "Is the pressure in cell 14001 greater than the pressure in cell 14501 by more than 50 psia?" If the answer to that question is yes, the current status of trip 505 is true, if not its status is false. The "n" (nolatch) specification means that the code asks this question during each time step to determine the status of the trip. With the alternate specification "l" (latch), the code continues to ask the question until the status of the trip is true. After that occurrence, the code stops asking and the status of the trip is assumed to be true thereafter. In other words, the trip has been "latched" true. The appended entry "-1." indicates the initial status of the trip (i.e., at the time Card 505 is input to the problem) is false. If a positive number is input here, it is interpreted as "the time this trip last turned true." The data following the asterisk is simply a comment to remind the analyst of the purpose of trip 505, in this case a check of the differential pressure. Note that in this example, the 50 psia constant assumes the problem is run in British units; in problems run in SI units the constant would be interpreted as 50 Pa.

The status of trip 505 may be used to implement virtually any action into the model when the differential pressure exceeds 50 psia. For example, the occurrence of trip 505 turning true may be used to trip a reactor, trip a pump, initiate an injection flow, open a valve, or change the value of a control variable from 0 to 1.

A variable trip may also be used to compare the current value of any calculated parameter against a constant. To illustrate, consider the following example:

```
506 mflowj 560010000 lt null 0 500. l -1. *low flow
```

Trip 506 asks the question "Is the mass flow rate at Junction 56001 less than 500 lbm/s?" The initial status of trip 506 is indicated as false and if the statement is ever true, it will be latched true thereafter. This statement might be used, for example, to scram a reactor as a result of violating a flow rate limit, as suggested by the low flow comment.

In many modeling situations, it is desirable to input references to trips whose logic will be refined at a later time. For example, when entering data for a pump component, it is necessary to specify a pump trip number. When this trip is false, the pump is assumed to be driven by the pump motor; when it is true, a pump coast down is assumed based on the physical characteristics of the pump and motor and the interaction with the hydrodynamic phenomena.

The modeler may input a trip number of 0, but doing so increases the complexity of implementing a pump trip later. If the user wants to include a pump trip later, say as a function of pressure, it will be necessary to re-input the entire pump component in a restart job just to redefine the trip. If, instead, the modeler initially specifies a “dummy” pump trip, then the pump trip may be later incorporated into the model simply by replacing this trip's dummy logic with the actual trip logic in the restart job. The advantage to the modeler is that re-specifying the trip involves a single input card while re-specifying the entire pump component involves hundreds of cards.

A convenient method for specifying dummy trips is to simply provide a convenient “always true” or “always false” reference. To illustrate, consider the following trips:

507 time 0 lt null 0 1.e6 l 0. *always true

508 time 0 gt null 0 1.e6 n -1. *always false

Trip 507 is true at time 0 and will always remain true while trip 508 is false at time 0 and will always remain false (of course, this assumes that problem times beyond 1,000,000 seconds will not occur).

4.4.2 Logical Trips

RELAP5-3D© logical trips, implemented using Cards 601-799, are used to combine the status of two trips using standard logical operators. These logical operators are AND, OR, and XOR. To demonstrate these operators, consider two variable trips, 520 and 521, and the logical trips 620, 621 and 622:

620 520 and 521 n -1.

621 520 or 521 n -1.

622 520 xor 521 n -1.

Trip 620 will be true only when the status of both trips 520 and 521 are true. Trip 621 will be true when trip 520 is true, when trip 521 is true, or when both trips 520 and 521 are true. Trip 622 will be true when either trip 520 or trip 521 is true, but not when both trips 520 and 521 are true. XOR is termed the “exclusive or” operator. The use of the latch/nolatch and initial value indicators in logical trips is the same in variable trips as described in the previous section.

In the examples shown above, the logical trips have only referenced variable trips. However, logical trips may also reference other logical trips. Furthermore, a logical trip may reference itself. When this is done, the logical trip is referencing its own status on the previous time step.

Example 1 -- Reactor Trip Logic

As a demonstration of the capabilities of the RELAP5-3D© trip logic, consider the reactor trip logic in the following example. Assume that a reactor trip occurs if any of the following conditions are met:

- The pressurizer pressure exceeds 2,300 psia.
- The pressurizer indicated level falls below 20%.
- Any one of the three hot leg temperatures exceeds 610° °F.
- The operator initiates a manual reactor trip.

Also, assume that once a reactor signal has been generated there is a 0.5 second delay prior to movement of the scram rods. To include a simulation of this reactor trip behavior in a RELAP5-3D© model, variable trips are first developed to provide the required parameter comparisons:

```
501  p        450010000  gt  null 0  2300. l  -1.  *przr p

502  cntrlvar  100        lt  null 0  0.20  l  -1.  *przr level

503  tempf     110010000  gt  null 0  610.  l  -1.  *hl1 temp

504  tempf     210010000  gt  null 0  610.  l  -1.  *hl2 temp

505  tempf     310010000  gt  null 0  610.  l  -1.  *hl3 temp

506  time      0          gt  null 0  1.e6  n  -1.  *manual trip
```

In trip 501 the pressurizer pressure is tested against 2,300 psia. Trip 502 tests the pressurizer indicated level against the 20% lower limit. It is assumed that control variable 100 has been defined in such a way that a value of 0 corresponds to 0% indicated level and a value of 1 corresponds to 100% indicated level. Trips 503, 504, and 505 test the fluid temperatures in each of the three hot legs against the 610° °F upper limit. Trip 506 is a dummy “always false” trip that has been included to provide a convenient method for simulating a manual reactor trip. For example, if a simulation of a reactor trip at 10 seconds is desired, trip 506 would be replaced with

```
506  time  0  gt  null  0  10.  n  -1.  *manual trip at 10 sec
```

Next, the variable trips are gathered together into a single trip that is false if none of the variable trips has ever been true and is true if any the variable trips has ever been true:

```
601  501  or  502  l  -1.

602  503  or  504  l  -1.
```

603 505 or 506 1 -1.

604 601 or 602 1 -1.

605 604 or 603 1 -1. *reactor trip signal

With this logic, if any of the variable trips 501 through 506 ever turns true, then trip 605 remains true thereafter. To simulate the 0.5 second delay between the generation of the reactor trip signal and the movement of the scram rods, the status of trip 605 is monitored using a variable trip:

507 time 0 gt timeof 605 0.5 1 -1. *scram rod movement

This trip statement asks the question “Is the current problem time greater than the time that trip 605 last turned true by more than 0.5 seconds?” Note that this question is only asked if trip 605 is true; if trip 605 is false, trip 507 is bypassed. [When a variable trip references a TIMEOF variable whose value is -1.0 (i.e., the trip is false), the evaluation of the variable trip is bypassed, Thus, the value of the variable trip remains the same as its value on the previous time step.] Therefore, trip 507 is used to initiate the reactor scram. In a case where core power is specified as a function of time after scram, trip 507 is used as the trip on the power table.

Example 2 -- Trip Logic to Simulate Relief Valve Hysteresis

A common modeling need is to simulate the response of a system with hysteresis. Many prototype plant components are controlled with this process. Examples include passively and actively controlled pressure relief valves, pressurizer spray valves, and pressurizer heater power.

To demonstrate trip simulation of a process with hysteresis, consider the code safety pressure relief valves located on the top of a PWR pressurizer. These valves feature a passive spring-loaded mechanism, and their purpose is to limit pressure excursions in the primary coolant system. Valve operation is characterized by two setpoint pressures: an opening pressure and a “reseat” pressure. As system pressure is increased, the valve opens at the opening pressure and remains open until the system pressure falls below the reseat pressure. This process therefore involves hysteresis; operation of the valve is not only dependent on the pressure but also on whether the valve is currently open or closed.

With RELAP5-3D© , a realistic simulation of this relief valve's operation can be accomplished by using a trip valve component and logic that mimics the actual response. First, variable trips are defined to compare the current system pressure against the two setpoint pressures. Assume the valve opening pressure is 2,550 psia and the reseat pressure is 2,530 psia. The corresponding variable trips are

560 p 850010000 gt null 0 2530. n -1. *p gt "reseat" setpoint

561 p 850010000 gt null 0 2550. n -1. *p gt opening setpoint

Trip 560 asks the question “Is the system pressure greater than the reseat setpoint pressure?” and trip 561 asks the same question regarding the opening setpoint pressure.

Next, logical trips are used to combine the information from the variable trips with the information on the current valve status into a trip that will control the valve:

```
610  560  and  611  n  -1.

611  561  or   610  n  -1.  * valve control
```

Trip 610 is true only if the valve was open on the previous time step and the current pressure is above the “reseat” setpoint pressure. Trip 611 is true only if the pressure exceeds the opening setpoint pressure or the valve was open on the previous time step and the current pressure is above the reseat setpoint pressure. Therefore, the status of trip 611 is used to control the model valve position: open when the trip is true and closed when the trip is false.

4.4.3 Terminating a Calculation by Trip

RELAP5-3D© calculations typically are terminated when the end time specified on the last of Cards 201 through 299 has been reached, when the computer CPU time limit on Card 105 has been reached, or when a failure has been encountered. Optional Card 600 provides an additional capability to terminate a calculation if and when any particular event occurs in the calculation. One or two trips may be specified on Card 600 and the calculation is terminated if any trip specified turns true. Either variable or logical trips may be specified. Once entered, the termination criteria remain effective unless a 600 Card with another specification is input in a subsequent restart calculation.

By using Card 600, the calculation can be terminated on virtually any occurrence. For example, if the user wishes to stop a calculation at the first occurrence of the injection flow through single-junction 150 falling below 100 kg/s, then the following trip logic could accomplish this. First, the mass flow rate at the junction would be tested against the 100 kg/s lower limit in a variable trip:

```
501   mflowj  150000000  lt  null  0  100.1  -1.
```

This variable trip is then referenced on the trip termination card:

```
600   501
```

When the flow rate falls below 100 kg/s, the status of trip 501 will change from false to true, the calculation will be terminated, and a message will be written to the printed output file indicating that termination was due to trip.

4.5 Interactive Variables

The capability for interaction between a user and an executing problem has been incorporated into RELAP5-3D© through interactive variables that are entered on Cards 801 through 1999. This capability, that exists when the code is interfaced with the Nuclear Plant Analyzer (NPA) color graphics software, allows a user to modify user-defined input quantities as a calculation is executing. This allows a user to initiate operator-like actions, such as opening or closing valves, starting and stopping pumps, and changing operating conditions.

An interactive variable is implemented on an 801 through 1999 Card by entering five words. Word 1 is an alphanumeric variable name and Word 2 is its initial value. Word 2 may be changed interactively from the NPA terminal, and its modification will effect the calculation in progress. Words 3, 4, and 5 provide a convenient capability for units conversion so that the NPA keyboard entry may be made consistent with RELAP5-3D© internal units requirements.

The user only needs to be concerned with interactive variables if a model is to be run interactively using software such as NPA. If interactive variables are needed later, they may be added readily to a model at any time.

4.6 Hydrodynamic Components

As a general rule, the user should be cautious of applications where the fluid conditions in the RELAP5-3D© hydrodynamic components may approach the critical pressure. With respect to light-water reactor safety issues, this limitation may be of significance to anticipated transient without scram (ATWS) transients. During ATWS events, the reactor is not tripped and continued core power has the potential to drive the primary coolant system pressure upward toward the critical point.

This section discusses specific practices for applying each type of hydrodynamic component. The component type is specified using cards of the format CCC0000 and it is recommended that these cards be the first entered for each component. The inputs required on the remaining cards vary depending on the component type.

4.6.1 Single-Volume Component

The single-volume component is the basic hydrodynamic cell unit in RELAP5-3D© . Note that the pipe component may be thought of simply as a series collection of single-volumes joined by single-junctions. A branch component may be thought of as a single-volume where one or more single-junctions may be combined. The input data specifications describing the basic volume geometries and conditions for the other types of components (pipes, branches, etc.) are identical to those described here for the single-volume component.

The flow area, length, and volume of the cell must be input. As described in the model, these three parameters must be consistent or an input error results. Thus, it is recommended that one of these three quantities be input as zero, allowing the code to calculate its value consistent with the two nonzero entries.

For complex geometries, the requirement that the area, length, and volume be consistent may require the modeler to accept a compromise on one or more of the input parameters. This situation arises when the modeler attempts to include a region with a varying flow area varies within a single hydrodynamic cell.

A compromise is needed because the average flow area for the geometry may not adequately represent the flow path in the region. The input flow area determines the flow velocity, the input length affects the calculated frictional pressure drop, and the input volume contributes to the overall fluid system volume. An additional constraint is that the length input for a vertical cell must be enveloped by the elevation gain of the cell. The modeler should select the compromise that would least affect the particular problem. If the error introduced by all compromises is deemed unacceptable, then more modeling detail should be included by using separate hydrodynamic cells to represent regions with different flow areas.

An azimuthal (horizontal) angle, an inclination (vertical) angle, and an elevation change must be input. An azimuthal (horizontal) angle from -360 to +360 degrees must be input (note that this entry is always in degrees even if SI units are specified for the problem). The azimuthal (horizontal) angle input is used so a graphics package can be used to show isometric views of the system as an aid in model checking. Such a graphics package is available with RELAP5-3D© . An inclination (vertical) angle from -90 to +90 degrees must be input (note that this entry is always in degrees even if SI units are specified for the problem). An entry of -90 is defined as vertically downward, +90 as vertically upward, and 0 as horizontal. The inclination (vertical) angle is used in the flow regime determination, in the interphase drag calculation, and with the graphics package. Volumes whose inclination (vertical) angles have magnitudes greater than or equal to 60 degrees use the vertical flow regime map and those whose inclination (vertical) angles have magnitudes less than or equal to 30 degrees use the horizontal flow regime map. Interpolation is used between 30 and 60 degrees. An elevation change specified for a volume must be less than or equal to the cell length. The elevation change is used in the gravity head and checking loop closure. An elevation angle is calculated from the arcsin of the ratio of the elevation change to the length. The calculated elevation angle is used in the additional stratified force term.

In modeling a straight pipe using a RELAP5-3D© volume, the inclination (vertical) angle ϕ is the same as the calculated elevation angle ϕ_{elev}. In modeling a curved pipe using a RELAP5-3D© volume, the inclination (vertical) angle ϕ will not be the same as the calculated elevation angle ϕ_{elev}.

An absolute wall roughness and x-direction hydraulic diameter must be input. It is recommended that a roughness representing the actual finish of the fluid boundary wall be used. Good modeling results have been obtained using roughnesses of 0.0000457 m (0.00015 ft) for commercial steel finishes and 0.0000015 m (0.000005 ft) for drawn tubing. It is recommended that the classically-calculated x-direction hydraulic diameter based on the following formula be used:

x-direction hydraulic diameter = $4 \bullet (\text{x – direction flow area}) / (\text{x – direction wetted perimeter})$.

For circular geometries (where parallel flow paths have not been lumped together into a single flow path), a zero x-direction hydraulic diameter may be input, in which case the code will automatically calculate and use a x-direction hydraulic diameter based on the formula

x-direction hydraulic diameter = $2 \bullet (\text{x – direction flow area}/\pi)^{0.5}$.

If the crossflow is activated in either the y- or z-directions, it is recommended that the y-direction hydraulic diameter and the z-direction hydraulic diameter be based on the physical geometry of the cross-direction. If a zero y-direction hydraulic diameter is input, the code will calculate and use a y-direction hydraulic diameter based on the formula (See Volume II).

y-direction hydraulic diameter = $4 \bullet (\text{y – direction flow area})/(\pi \bullet \text{x – direction flow area})^{0.5}$.

If a zero z-direction hydraulic diameter is input, the code will calculate and use a z-direction hydraulic diameter based on the formula (See Volume II).

z-direction hydraulic diameter = $4 \bullet (\text{z – direction flow area}) / (\pi \bullet \text{x – direction flow area})^{0.5}$.

The volume control flags of the format tlpvbfe must be input for each hydrodynamic cell. These flags define the operative code options for each cell. When default flags (0000000) are assumed, the thermal stratification model is inactive (t = 0), the level model is inactive (l = 0), the water packing is active (p = 0), the vertical stratification model is used in volumes that are vertical (v = 0), the normal pipe interphase friction model is used (b = 0), the wall friction model is active (f = 0), and phasic nonequilibrium is allowed (e = 0). The default volume control flag options are generally recommended and users should carefully consider the effects of using non-default flags. Guidance for these considerations is provided in Section 3.3.1.

An initial condition control word and corresponding initial fluid conditions are required input for each hydrodynamic cell. For most light-water reactor applications, users will find it most convenient to specify initial conditions using control Word 3 (pressure and fluid temperature) in subcooled regions and control Word 2 (pressure and quality) in saturated regions. A discussion of the other options is provided in Section 3.3.3.1.

Note that each hydrodynamic volume has an inlet and an outlet face for the volume's coordinate direction that will be used to connect normal junctions to the volume. The inlet and outlet faces are defined as a part of the junction specifications; however, the definition of the faces must be consistent with the elevation change specified. To illustrate, for a volume with a positive elevation change, the lower end of the cell is considered its inlet face and the upper end of the cell is considered its outlet face. Each hydrodynamic volume also has inlet and outlet faces for the volume's two cross-directions; the crossflow inlet and outlet faces are also defined as part of the junction specifications.

4.6.2 Time-Dependent Volume Component

The TMDPVOL component allows the user to impose a volume-related boundary condition on a model. The term "volume-related" means the condition is one that is normally input as a part of a volume specification rather than a junction specification. For example, pressure, liquid temperature, vapor/gas temperature, void fraction, and quality are volume-related quantities.

For light-water reactor modeling, TMDPVOLs typically are employed in two types of applications. First, TMDPVOLs may be used to specify pressure boundaries, generally at locations where fluid exits a model. For example, a TMDPVOL may be used to control the pressure at the inlet of a turbine. The pressure solution throughout the secondary system is then determined by the turbine inlet pressure, the system flow losses, and the system flow rate. When used to specify a pressure boundary, the TMDPVOL is coupled to the remainder of the model using a normal type of junction (such as a single-junction or valve). When used in this way, the TMDPVOL actively interacts with the rest of the model.

Second, TMDPVOLs are used to specify fluid conditions at injection sites. For example, a TMDPVOL may be used to specify the temperature of emergency core cooling fluid. When used to specify the fluid conditions at an injection boundary, the TMDPVOL typically is connected to the remainder of the model through a TMDPJUN that effectively isolates the fluid conditions in the TMDPVOL from the remainder of the model. In this application, the TMDPVOL is used simply to provide the proper fluid conditions for an injection flow boundary condition as defined by the TMDPJUN. A discussion of boundary condition specifications is found in Section 3.3.4.

The term "time-dependent volume" is inaccurate; originally, fluid conditions could be specified only as a function of problem time. Current capabilities include specifying the fluid condition in any manner and as a function of virtually any problem variable the user desires.

The boundary condition information entered includes a fluid condition control word, a trip number, a two-word search variable, and a table. The control word defines the variables used to define the fluid state; this option is the same as that described in Section 4.6.1 for the single-volume component. The trip number determines at what problem time the table is to be referenced. The search variable is the code-calculated parameter assumed to be the independent variable in the time-dependent volume table. The dependent entries in the table are the hydrodynamic conditions required to define the fluid state.

As a simple example, consider a time-dependent volume that is to represent a constant pressure atmospheric containment boundary condition for a LOCA simulation. Assume that no reverse flow from the containment to the coolant system is anticipated, such as would be the case for a small break. For this purpose, TMDPVOL 580 may be input as follows:

```
*hydro     name      type

5800000   "contain"  tmdpvol
```

```
*hydro    area length volume horiz vert elev  rough  dh  flags

5800101   1.e6    0.    1.e6    0.    0.   0.    0.   0.  00010

*hydro     εbt      trip    alphacode   numericcode

5800200     3

*hydro     time     pressure    temp

5800201     0.       14.7       213.
```

The data input on Card 5800101 are virtually immaterial to the problem since the TMDPVOL is being used only to define the pressure condition. Control Word 3 specifies that the table should indicate the boundary condition as a pressure and fluid temperature. Since a constant pressure condition is desired, only one entry is needed in the table: time 0., 14.7 psia, 213° ^{o}F. Note that since no reverse flow is anticipated, the fluid temperature specified is also immaterial. At 14.7 psia, a temperature of 213° ^{o}F is a superheated vapor/gas. However, in this application, the problem solution would be identical even if a subcooled liquid state was specified.

Now consider that it is desired to include the effects of a variable containment pressure during the calculation. Assume it is known that for this accident the break flow will pressurize the containment linearly from 14.7 psia to 50 psia over 15 seconds and that the containment coolers will then reduce the pressure to 20 psia over another 10 seconds. This effect could be included in the above example by entering a table that reflects this pressure response:

```
*hydro      time     pressure   temp

5800201      0.       14.7       213.

5800202     15.       50.        213.

5800203     25.       20.        213.
```

The boundary condition may be tailored to any particular specification by employing and combining the trip and search variable options. The trip option allows the user to implement the table at any problem time, or as a result of any occurrence in the calculation, as desired. By specifying a search variable other than time, the boundary condition may be made a function of any calculated parameter.

To illustrate, consider extending the above example in the following way. Assume the break is to open when the pressurizer level falls below 20%. The break will be modeled using a trip valve component and say that trip 510 is used to compare a control variable representing the pressurizer level against the 20% limit. Because it is not known in advance at what time the coolant pipe break into containment will

occur, trip 510 will also be used to trip the TMDPVOL parameter table. Further assume that the containment pressure response is known as a function of the integrated break flow. Elsewhere, control variable 105 is used to calculate the integrated break flow. To model this situation, the time-dependent volume input might appear as follows:

```
*hydro      name       type

5800000    "contain"  tmdpvol

*hydro    area length volume horiz vert elev rough dh flags

5800101   1.e6    0.    1.e6    0.    0.   0.    0.   0.  00010

*hydro     εbt      trip    alphacode   numericcode

5800200     3       510     cntrlvar      105

*hydro cntrlvar 105 pressure   temp

5800201    -1.e99    14.7       213.

5800202     0.       14.7       213.

5800203     1.       16.        213.

5800204    10.       20.        213.

5800205   150.       30.        213.

5800206   500.       35.        213.

5800207  1000.       36.        213.
```

With this format, the status of trip 510 is monitored. As long as the trip is false, the table returns a pressure of 14.7 psia (as indicated by the pressure associated with the -1.e99 independent variable). In order to ensure proper operation for pressure = 14.7 psia, both the 5800201 card (cntrlvar 105 = -1.e99) and the 5800202 card (cntrlvar 105 = 0.) need to be entered. After the break opens and trip 510 turns true, the containment pressure is determined as the pressure in the table corresponding to the current value of the integrated break flow (control variable 105).

An initialization problem with TMDPVOLs can be encountered if a search variable from a higher-numbered component is specified. The components are initialized in numerical order. Therefore, if a TMDPVOL uses a condition (pressure, temperature, etc.) from a higher-numbered component, an

indeterminate condition is reached because that component has not yet been initialized. This problem can be circumvented by always referencing lower-numbered components or by referencing a control variable (such as in the above example) that has been initialized by the user.

An initialization problem with TMDPVOLs will be encountered if mass flow rate (mflowj) is the search variable, because this variable has not yet been calculated by the code. This problem can be circumvented by using a control variable for the search variable, that in turn uses the variable mflowj. The control variable should be a SUM component that is initialized by the user and uses S = 1, $A_0 = 0$, and $A_1 = 1$.

4.6.3 Single-Junction Component

The single-junction is the basic hydrodynamic flow unit in RELAP5-3D© . The input data specifications describing the basic junction properties and conditions for the junctions associated with other types of components (pipes, branches, etc.) are identical to those now described for the single-junction component.

The “from” and “to” components must be specified for each junction. As discussed in Section 4.6.1, each component has an implied inlet and outlet face. The “from” and “to” component callouts for junctions using the old connection code format refer to the component number, a two-digit face identifier, and four trailing zeros. When connecting to a component's inlet face, the appended digits are 00. When connecting to a component's outlet face, the appended digits are 01. For example, consider a junction that connects the outlet of pipe 150 to the inlet of single-volume 160. The “from” code entered is 150010000 and the “to” code entered is 160000000. When using the expanded connection code format for a one-dimensional component, the connection code is CCCXX000F, where CCC is the component number, XX is the volume number, and F indicates the face number. The number F equal to 1 and 2 specifies the inlet and outlet faces, respectively, for the volume’s normal or first coordinate direction. For the example discussed above, the “from” connection code entered is 150XX0002 and the “to” code is entered is 160010001, where XX is the last volume in pipe 150. The number F equal to 3 through 6 specifies crossflow. The number F equal to 3 and 4 would specify inlet and outlet faces, respectively, for the second coordinate direction; F equal to 5 and 6 would do the same for the third coordinate direction. For connecting to a time-dependent volume using the expanded format, only the number F equal to 1 or 2 is allowed.

The “from” and “to” identifiers specify the direction of positive junction flow. In the above example, flow from component 150 to component 160 will be considered positive by the code; flow in the opposite direction will be considered negative.

It is necessary to input a user-supplied junction flow area. If zero is input, then the code assumes that the junction area is the minimum flow area of the adjacent hydrodynamic volumes. For the abrupt area option (a = 1 or 2), the user supplied junction area must be equal to or smaller than the minimum of the adjoining volume areas. For the smooth area option (a = 0), there are no restrictions. Two quantities, the junction area and the junction area ratio, are defined from the user-supplied junction area. The junction

velocities correspond to the junction area, rather than the user-supplied junction area. See Volume II, Section 2 for a discussion of this, as there are differences between the abrupt area and smooth area options. It is also required to input forward and reverse loss coefficients (although zeros may be specified). This input allows the user to insert flow losses associated with irregular pipe geometries such as are found at bends and fittings. The total flow loss will be based on a combination of losses from interphase drag, wall friction, abrupt area change, and user-specified loss coefficients. All loss coefficients are referenced to the user-input junction area (or that calculated by the code as explained above).

It is also necessary to enter the "jefvcahs" junction control flags and initial velocity or flow conditions for each junction. Details regarding selection of the junction flags are described in Section 3.3.2 and details regarding initial condition input are described in Section 3.3.3.2.

Regarding the selection of the abrupt or smooth area change model at junctions, the abrupt area change option may be used to represent the flow losses through sudden contractions and expansions. When selected, the code calculates the loss based on the area change ratio and the current fluid conditions. It is recommended that this option not be used for minor flow paths where the area change ratio is less than 0.1. For this situation, the smooth area change option and an appropriate loss coefficient is recommended.

The recommended input junction flags when the choking model is on (c = 0) are abrupt (a = 1 or 2) and nonhomogeneous (h = 0). (1) With regard to the abrupt area options (a = 1 or 2), these are discussed in Volume II, Section 2.4. The full abrupt area change model (a = 1, code calculated losses) is recommended for sudden (i.e., sharp, blunt) area changes, while the partial area change model (a = 2, no code calculated losses, user input losses are to be used) is recommended for rounded or beveled area changes. The extra interphase drag term (see Volume IV, Section 7) in the abrupt area model (a = 1 or 2) helps ensure more homogeneous flow that would be expected through a sudden area change. The smooth area change option (a = 0) is recommended only for when there is no area changes or there are smooth area changes (i.e., venturi). (2) With regard to the nonhomogeneous (h = 0) option, it is generally recommended that h = 0 be used. There may be rare situations where the combined interphase drag is too low, resulting in too much slip and too low mass flow. For this situation, the homogeneous (h = 1 or 2) is recommended. (3) The user should monitor the calculated results for nonphysical choking. If this occurs, the user should turn choking off (c = 1) at junctions where this occurs.

The optional countercurrent flow limiting (CCFL) data card is available for input at junctions. The use of the CCFL model is discussed in Section 3.4.6. While this card is termed optional, it must be used if the user does not wish to have the code compute a hydraulic diameter for the junction based on the assumption of a circular pipe geometry. This is true whether or not the CCFL model is being invoked.

The optional junction face placement data card is available for input at junctions. It is used to improve the graphical display of the hydrodynamic nodes. Is is used to resolve problems with converging and diverging flow, that is, multiple junctions attached to the same face of a volume.

A single-junction (SNGLJUN) component may be flagged as a jet junction. A j value of 1 on the junction flags (jefvcahs) labels the junction as a jet junction. Jet junctions are used where subcooled liquid

is injected into the bottom of a stratified pool. The flag activates logic to increase the condensation rate on the surface of the pool. Condensation is only enhanced in the volume above the jet when there is a stratified level in that volume. Condensation in volumes above the volume connected to the jet junction will not be influenced by the jet. This fact may make it advisable to use a tall volume above the jet. Data shows that water heights above the jet of more than 4 tank diameters are greatly influenced by the jet at jet Reynolds numbers above 25,000. If the volume above the jet is not vertically stratified, or does not contain the level from the level model, the jet will have no effect on condensation.

4.6.4 Time-Dependent Junction Component

The TMDPJUN component permits the user to impose a flow boundary condition on a model. It is possible to specify the flow condition as either a volumetric or mass flow rate. An illustrative example of this capability is the specification of an injection flow rate as a function of the coolant system pressure (e.g., for the flow delivered from an ECC system employing centrifugal pumps).

As is the case for a TMDPVOL component described in Section 4.6.2, the TMDPJUN specifies a trip number, a search variable, and a table that correlates the search variable to the flow boundary condition. To model the ECC system described above, the TMDPJUN input might look as follows:

```
*hydro      name     type

5900000    "eccs"    tmdpjun

*hydro     from        to          area

5900101   585000000   595000000      0.05

*hydro    vel/flow      trip      alphanumeric    numeric

5900200      1          575          p         595010000

*hydro      p        mdot-l      mdot-v     mdot-if

5900201    -1.e99       0.          0.         0.

5900202      0.         0.          0.         0.

5900203     0.01      300.          0.         0.

5900204     500.      250.          0.         0.

5900205    1000.      200.          0.         0.

5900206    1500.      120.          0.         0.
```

```
5900207   2000.     60.      0.      0.

5900208   2400.     25.      0.      0.

5900209   2500.      0.      0.      0.
```

Assume that trip 575 has been defined as the safety injection actuation signal and no ECC flow is possible until certain conditions are met. Before the status of this trip turns true, no flow will be injected by TMDPJUN 590 (when the trip is false the flow rate associated with a negative search argument is used). In order to ensure proper operation for no flow, both the 5900201 card (P = -1.e99) and the 5900202 card (P = 0.) need to be entered. After the trip turns true, a search is made in the table using the pressure in volume 595010000 to evaluate the injection mass flow rate. With the input shown above, the shutoff head of the injection pump is 2,500 psia and as the pressure falls, the injection mass flow rate increases in a manner prescribed in the table. Component 585 would be modeled with a TMDPVOL that specifies the temperature of the injection fluid.

An initialization problem with TMDPJUNs can be encountered if a search variable from a higher-numbered component is specified. The components are initialized in numerical order. Therefore, if a TMDPJUN uses a condition (pressure, temperatures, etc.) from a higher-numbered component, an indeterminate condition is reached because that component has not yet been initialized. This problem can be circumvented by always referencing lower-numbered components or by referencing a control variable (such as in the above example) that has been initialized by the user.

An initialization problem with TMDPJUNs will be encountered if mass flow rate (mflowj) is the search variable, because this variable has not yet been calculated by the code. This problem can be circumvented by using a control variable for the search variable, that in turn uses the variable mflowj. The control variable should be a SUM component that is initialized by the user and uses S = 1, $A_0 = 0$, and $A_1 = 1$.

4.6.5 Pipe, Annulus, and Pressurizer Components

The pipe component is simply a series combination of single-volume and single-junction components. Component descriptions and input requirements are presented in Section 4.6.1 for the single-volume component and in Section 4.6.3 for the single-junction component. The advantage of the pipe over the separate single components is primarily one of input efficiency. For example, the number of data cards needed to input a ten-cell pipe is significantly fewer than to input the corresponding ten single-volumes and nine single-junctions. This efficiency results from using the sequential expansion input format.

As an example of the sequential expansion format, consider the input needed to specify the flow areas for a seven-cell pipe. For the first two cells, the flow area is 1 ft^2, for the third cell it is 4 ft^4, and for cells 5, 6, and 7, it is 2 ft^2. These data are entered for component CCC as follows:

```
CCC0101  1.  2   4.  3   2.  7
```

This data is read by the code as 1 ft^2 *through* Cell 2, 4 ft^2 *through* Cell 3, and 2 ft^2 *through* Cell 7.

By definition, the pipe component has only internal junctions associated with it. Any connections to the ends of a pipe must be made with external junctions (e.g., single-junctions, valves, time-dependent junctions, or junctions associated with branch-type components). RELAP5-3D© includes a new capability to connect external junctions to any face of internal pipe cells and any face of pipe cells at the ends of a pipe. To exercise this capability, it is necessary to use the expanded connection code option of RELAP5-3D© . See the description of the single-junction component in Appendix A of the user input manual (Volume II).

Flow branching may be accomplished by connecting two or more external junctions at the end of a pipe component; it is not necessary to use a branch component for this purpose. A nonfatal warning message will appear in the printed output indicating that more than one junction is attached at a pipe end.

The annulus component is identical to the pipe component, except that an annular flow regime map is used. An annulus component must be specified as a vertical component.

The pressurizer component is identical to the pipe component, except that additional input is required. There is also additional optional input. A pressurizer component can be used to model a non-condensable gas driven pressurizer as well as a vapor/liquid pressurizer.

4.6.6 Branch, Separator, Jetmixer, Turbine, and ECC-Mixer Components

4.6.6.1 Branch. The branch component may be thought of as a single-volume component that may have single-junctions appended. Component descriptions and input requirements are presented in Section 4.6.1 for the single-volume component and in Section 4.6.3 for the single-junction component.

Any number of junctions may be defined as a part of a branch component. Note that other external junctions (e.g., single-junctions, valves, and time-dependent junctions) that are defined separately may also connect to a branch.

The separator, jetmixer, turbine, and ECC-mixer components are specialized branch components. Certain restrictions on the number and orientation of junctions apply for these specialized components. Brief discussions regarding use of these specialized branches are presented in the following subsections.

4.6.6.2 Separator. The separator component is a specialized branch mainly used for simulating the behavior of LWR steam separators. Three junctions must be defined with a separator, and no junctions defined in other components may connect to a separator. By definition, junction 1 must be the vapor/gas outlet junction, junction 2 must be the liquid return junction, and junction 3 must be the separator inlet. Recommendations and restrictions for separator user option selection are documented in Appendix A, Volume II of the RELAP5-3D© manual. Four separator options are available. Option zero is the simple separator model provided in a previous version of RELAP5-3D© . Options 1 through 3 are new to

RELAP5-3D© and are intended to model the chevron dryers (option 1) and the two- and three-stage centrifugal separators (options 2 and 3) in BWR reactors.

4.6.6.2.1 Simple Separator Option. The separator component accepts the inlet flow, performs an idealized prescribed separation of the liquid and vapor/gas phases, and when in the separating mode (depends on the input parameters VGMAX and VFMAX) passes mostly vapor/gas out the separator outlet junction and passes mostly liquid out the liquid return junction. Example nodalizations of separator applications are documented in Section 5.

The separation process is directed by the volume fraction limits associated with the last entries on the input cards for the vapor/gas and liquid outlet junctions. For the vapor/gas outlet junction, this entry is termed VOVER and represents the vapor/gas fraction above which the outlet flow is pure vapor/gas. For the liquid return junction, this entry is termed VUNDER and represents the liquid fraction above which the flow out the liquid return junction is pure liquid.

The VOVER and VUNDER limits are based on the separator hydrodynamic cell conditions, not the junction conditions. For void fractions greater than VOVER and less than (1-VUNDER) along with VGMAX = VFMAX = 1.0, an idealized separation process is used. This idealized process involves a total separation of the fluid entering the separator inlet junction. Pure vapor/gas passes through the outlet junction (when VGMAX is 1.0) and pure liquid is returned through the liquid return junction (when VFMAX is 1.0). For void fractions less than VOVER, the separator is assumed to be flooded and liquid may flow out the vapor/gas outlet junction. For void fractions greater than (1-VUNDER), the separator is assumed to be drained and vapor/gas may be carried under through the liquid return junction. When outside the range of void fractions for the idealized separation mode, the separator component reverts to the normal branch component models.

Default values of VOVER = 0.5 and VUNDER = 0.15 are used if not specified by the user. With these values, an idealized separator is modeled (using VGMAX = VFMAX = 1.0) when the void fraction is between 0.50 and 0.85. The user must therefore ensure that the separator void fraction is between the limits specified when simulating a normal separator operation. Separator performance in off-normal situations is an area of considerable uncertainty. There is a general lack of available separator test data that may be used to correlate appropriate liquid carryover and vapor/gas carryunder limits.[4.6-1]

4.6.6.2.2 Mechanistic Separator and Dryer Options. The separator component accepts the inlet flow, computes the performance characteristics of the separator or dryer from the inlet conditions, and modifies the void fractions in the liquid and vapor/gas outlet junctions to reflect the separator or dryer performance at that set of inlet conditions.

The separator component volume for the mechanistic separator model should include the volume within the separator barrel, all discharge passages, and that portion of the volume in the separator standpipe between the elevations of the first-stage discharge passage and the separator hub. The standpipe should be modeled as a separator volume or a set of volumes. The height of the separator component should be the

distance between the elevation of the outlet of the first-stage discharge passage and the top of the separator to ensure that the computation of the liquid level surrounding the separator is correct.

The separator component volume for the dryer option should include the volume within the dryer skirt from the elevation of the bottom of the dryer to the elevation at the top of the dryer. The liquid discharge line between the dryer and the downcomer should be explicitly modeled as a separate volume or set of volumes so that a liquid level might exist in the liquid discharge line during periods of low dryer liquid flow. The liquid level in the discharge line would prevent the injection of steam from the dryer into the downcomer.

4.6.6.3 Jetmixer. The jetmixer component is a specialized branch that is mainly used for simulating the behavior of BWR jet pumps. Three junctions must be defined and no junctions defined in other components may connect to a jetmixer. By definition, junction 1 must be the drive, junction 2 must be the suction, and junction 3 must be the discharge. Recommendations and restrictions for jetmixer user option selection are documented in Appendix A, Volume II of the RELAP5-3D© manual.

The jetmixer uses the momentum of the drive junction to accelerate the suction flow through the discharge junction. There has been only limited user experience applying the jetmixer component. Example nodalizations of jetmixer applications are documented in Section 5.

4.6.6.4 Turbine. The turbine component is a specialized branch that allows for work extraction. A simple turbine may be modeled using one turbine component; multistage turbines may be modeled using a series combination of turbine components. Each turbine component may define two junctions. Junction 1 (required) must be the inlet junction and junction 2 (optional) should be a crossflow junction for steam extraction. The normal turbine outlet junction must be defined as a part of another component (such as a single-volume or branch). Recommendations and restrictions for turbine user option selection are documented in Appendix A, Volume II of the RELAP5-3D© manual.

The turbine component requires additional input data requirements (beyond those for a branch) to define rotor geometry and performance parameters. A turbine component may be connected to a control variable shaft component, which in turn may be connected to a control variable generator component. With this arrangement, the speeds, loads, and inertias of the turbine, shaft, and generator are determined consistently.

There has been little user experience applying the turbine component. The turbine component has been used with limited success in a steam/water system. However, there have been more successful steady-state applications of the turbine model using hydrogen and helium as the working fluid. In those applications, a simple single-stage turbine was used. There has been little experience with multiple-stage turbines; it is recommended that a single-stage turbine be modeled unless bleed paths are needed from each stage. In the hydrogen and helium applications, turbine type 2 was used; a reaction fraction and stage radius are not used when this option is selected. In these applications, the turbine power extracted was found to be entirely dependent on the differential pressure across the turbine. Other parameters had virtually no effect.

4.6.6.5 Emergency Core Cooling Mixer. The ECC-mixer component is a specialized branch that may be used to simulate the phenomena associated with subcooled ECC injection into a reactor coolant system. The ECC-mixer component is a new model that has not existed prior to RELAP5-3D© so user experience is restricted to developmental assessment applications. The purpose of the model is to provide a more representative simulation of the flow regimes and interphase heat transfer processes associated with a subcooled liquid stream entering a voided pipe.

The ECC-mixer component should be centered at the injection site and preferably have a length-to-diameter ratio greater than 3. It is necessary to specify three junctions. Junction 1 is the injection junction, junction 2 is the normal inlet, and junction 3 is the normal outlet. Recommendations and restrictions for ECC-mixer user option selection are documented in Appendix A, Volume II of the RELAP5-3D© manual. Note that the user may specify an injection angle by using the last word on the data input card describing junction 1.

4.6.7 Valve Component

The valve component provides a general capability for specifying a junction with a variable flow area. The input requirements for the single-junction component described in Section 4.6.3 also apply to the valve component, except that the user-supplied input junction area must be greater than zero for the motor and servo valves.

A valve type must be specified. This selection is dictated by the manner in which the user would prefer the valve to be controlled. Available valve types include check, trip, inertial, motor, servo, and relief. Recommendations and restrictions for valve user option selection are documented by valve type in Appendix A, Volume II of the RELAP5-3D© manual. Descriptions and example applications for each valve type are presented in the following subsections. For light-water reactor safety applications, the check, trip, and servo valves are particularly useful, and the motor valve is moderately useful. The inertial and relief valves have had limited user experience; the inertial and relief valves should be used only when the dynamic response of these valves is important. Because code assessments have highlighted the importance of adequately modeling actual valve performance, it is recommended that the user carefully consider the modeling of valves. Factors such as valve closure time, closing characteristics, and leakage have been shown to significantly affect simulations. A closed valve is treated as a time dependent junction with no flow.

4.6.7.1 Check Valve. The check valve component is used as a flow control device to prevent back flow of fluid from one region into another when the downstream pressure is higher than the upstream pressure. Check valves are employed at many locations in a light-water reactor. Examples include ECC injection, accumulator injection, and feedwater injection lines. When modeling a system, check valve components are simply included at the same location as the prototype valves.

It is recommended that the check valve type be specified using option 0. Numerical difficulties have been experienced when using option 1. The check valve component is fully open whenever the upstream pressure exceeds the downstream pressure and fully closed whenever the reverse is true. Check valves

generally have been applied using zero closing back pressures and leak ratios. User experience has shown that, when leakage is to be modeled, the valve must have been open previously for the leakage to be simulated. To simulate leakage with a check valve that should always be closed, initialize the valve open and let local pressures close it immediately when the calculation begins.

4.6.7.2 Trip Valve. The trip valve component is used whenever a binary control (i.e., open or closed) valve is needed. The binary operator used is the trip (described in Section 4.4). The trip valve is fully open whenever its associated trip is true and fully closed whenever its associated trip is false. Since control logic for many prototype valves may be reduced to a binary operation, the trip valve is used frequently. Example applications for a trip valve include isolation valves and relief valves. An accumulator system might contain an isolation valve that must be opened to allow flow or closed when the tank has emptied. A relief valve might be open if certain conditions are present and closed if not. Example 2 in Section 4.4.2 illustrates how the behavior of a hysteresis relief valve may be simulated with trip logic.

The trip valve is also valuable in providing modeling flexibility. For example, consider a study to find the sensitivity of calculated results to various flow systems. The modeler may include all flow systems in a base model and will then have the capability to "valve-out" flow systems by employing isolating trip valves. The sensitivity calculations may proceed using the same model. The appropriate flow systems are selected by altering trip status as needed.

4.6.7.3 Inertial Valve. The inertial valve allows the user to simulate the detailed response of a check valve based on the hydrodynamic forces on the valve flapper and its inertia, momentum, and angular acceleration. Unless the dynamic response of the valve itself is of particular importance to a problem, it is recommended that the inertial valve not be used. The check valve component described in Section 4.6.7.1 is recommended for that purpose. There has been only limited user experience applying the inertial valve component.

4.6.7.4 Motor Valve. The motor valve component lets the modeler simulate a valve that is driven open or closed at a given rate following the generation of an open or close command. Trip status is used to generate the open and close commands; one trip number is identified as the open trip and another as the close trip. The valve responds by maintaining its current position unless either the open or close trip is true. If both are true at the same time, the calculation will be terminated. When opening or closing, the normalized valve area is reduced at a specified change rate. The change rate is specified as a time-constant in units of inverse seconds. A change rate of 0.1 therefore indicates the normalized valve area changes from full closed to full open (or the reverse) in 10 seconds.

The model also allows the user to incorporate a nonlinear normalized valve area response. If a valve table number is identified, the table is assumed to correlate the normalized valve stem position and the normalized valve flow area. In the above example, the normalized stem position would be assumed to vary from 0 to 1 (or 1 to 0) over 10 seconds. A nonlinear normalized valve flow area response may then be incorporated through the valve table.

The motor valve would appear to be very useful, but the need to specify a constant change rate limits its applicability. Generally, it is recommended that a motor valve component be used only in applications

where the valve change rate in the prototype system is well known and where realistic simulation of this valve control is important to the problem. For most applications, the servo valve is a more appropriate selection because of greater flexibility in its control.

4.6.7.5 Servo Valve. The servo valve component is the most flexible valve model. Its normalized flow area is equal to the current value of a specified control variable. For a control variable value of 0, the valve is fully closed and for a value of 1 it is fully open. Thus, virtually any process, accessing virtually any calculated parameter, may be reduced through control variable logic to a normalized flow area and used to control the valve position.

As for the motor valve, the user can incorporate a nonlinear valve area response. If a valve table number is identified, the table is assumed to correlate the valve normalized stem position and the normalized valve flow area. In this case, the specified control variable is interpreted as the normalized stem position and a nonlinear normalized valve flow area response may then be incorporated through the valve table.

To demonstrate the power of the servo valve component, consider modeling a prototype feedwater control system for a PWR with U-tube steam generators. The feedwater flow rate is controlled by modulating the feedwater valves based on the response of a three-point control system. The feedwater flow rate, steam flow rate, and steam generator indicated level are measured and used to drive a complex control system. This system processes the feed/steam flow mismatch and level errors through proportional-integral controllers into a valve movement command. If this control system is accurately modeled using the RELAP5-3D© control variable logic described in Section 4.10, then the modeled control system output may be arranged such that a control variable will represent the normalized feedwater valve flow area. The feedwater valve is then modeled using a servo valve component that references that control variable.

4.6.7.6 Relief Valve. The relief valve gives the capability to simulate the detailed response of a spring-loaded relief valve based on the hydrodynamic forces on the valve piston, and its mass, momentum, and acceleration. Unless the dynamic response of the valve itself is of particular importance to a problem, it is recommended that the relief valve not be used. The trip valve component described in Section 4.6.7.2 and the trip logic described in Section 4.4.2, Example 2, are recommended for that purpose. There has been only limited user experience applying the relief valve component.

4.6.8 Pump Component

The input and performance of the pump component is arguably the most misunderstood of the RELAP5-3D© models. The pump component consists of a single hydrodynamic volume with appended inlet and outlet junctions. By definition, junction 1 is the pump inlet and junction 2 is the outlet junction. The pump model acts simply as a momentum source that produces a pump differential pressure with a corresponding pump head. The pump head is apportioned equally between the inlet and outlet sides. In other words, the pump center pressure is midway between the inlet and outlet pressures.

The pump head is calculated based on the rated pump conditions, a normalized set of pump characteristics (the homologous curves), and the currently-calculated conditions (e.g., pressure, temperature, void fraction, and flow rate). Because the pump performance is explicit (except for the pump head being coupled implicitly to the phasic velocities), the solution is usually based on the conditions present in the previous time step. Therefore, the user should check for stability difficulties with the pump model that may be encountered when (a) the time step size is large, (b) the calculated phenomena are changing rapidly, or (c) the slopes of the homologous curves are particularly steep. Instabilities associated with the mostly explicit nature of the pump model would be manifested as pressure oscillations with a frequency corresponding to the time step size. If this occurs, the user should reduce the time step size until these oscillations disappear or are reduced to a tolerable level.

The homologous curves provide single-phase performance relationships between the pump flow, head, and speed. These relationships are non-dimensionalized using the pump rated conditions. If needed, the pump model provides the capability to degrade the pump performance as a function of the coolant void fraction in the pump.

4.6.8.1 General Pump Input. Much of the input required for the pump component is similar to that presented for the single-volume and single-junction components described previously and will not be repeated here. The reader is urged to read the input requirements section of the code manual for several input restrictions (Volume II). Some general model options are not available for the pump component.

The CCC0301 Card (CCC is the component number) is used to input the flags that specify the locations of the pump data, the two-phase and motor options, and the pump speed control, the pump trip number, and whether reverse pump speeds are allowed.

The CCC0302 through CCC0304 Cards are used to input the pump rated conditions and other pump parameters. In general, the pump rated conditions are available in data supplied by pump manufacturers. Note that the pump rated speed and ratio of initial to rated speeds are input. The pump does not need to be initialized at its rated speed. Input for the moment of inertia should include all rotating masses: pump, shaft, and motor. The friction torque inputs (τ_{fr0}, τ_{fr1}, τ_{fr2}, and τ_{fr3}) are used to model the bearing friction drag for the pump. The friction torque is determined from the cubic equation

$$\text{friction torque} = \pm\left(\tau_{fr0} + \tau_{fr1}\left|\frac{\omega}{\omega_R}\right| + \tau_{fr2}\left|\frac{\omega}{\omega_R}\right|^2 + \tau_{fr3}\left|\frac{\omega}{\omega_R}\right|^3\right)$$

where

$\frac{\omega}{\omega_R}$ = the ratio of current speed to rated speed.

This input allows the bearing friction torque to be specified as a function of pump speed. The rated speed, flow, head, torque, density, and motor torque are used along with homologous curves to calculate pump performance when the pump is powered. Following a pump trip, pump coastdown will be

determined by the moment of inertia, the friction torque, and the interaction (through the homologous curves) between the pumped fluid and the impeller. It is recommended that the user input a nonzero friction torque because if it is specified as zero the pump speed coastdown following trip may not end at zero speed. In other words, if the rotor is considered to be frictionless, then it will tend to "pinwheel" in any residual flow, such as from natural loop circulation. This effect can be important because the locked-rotor pump resistance is a significant portion of the overall loop resistance at natural circulation flow rates. The difference between locked-rotor and pinwheeling resistances is considerable. As a starting point, it is recommended that a total of 2% of rated torque be used as friction torque. Furthermore, it is recommended that this 2% be evenly divided between torques τ_{fr0} and τ_{fr2}; therefore, 1% represents static bearing friction and 1% represents bearing friction proportional to the square of the pump speed.

4.6.8.2 Homologous Curve Development. The RELAP5-3D© homologous curves provide the data needed for the code to calculate single-phase pump performance. RELAP5-3D© contains built-in homologous curves for a Westinghouse and a Bingham-Willamette pump. To avoid considerable extra effort, the pump to be modeled should be represented with one of the built-in options if possible. Homologous curve selection is made using the first field on Card CCC0301: 0 indicates the curves are to be input, a positive number indicates the curves input for the component with the same number are to be used, -1 indicates the Bingham-Willamette curves are to be used, and -2 indicates the Westinghouse curves are to be used.

If the user determines that homologous curves need to be input, then the data for a full set of curves must be developed. The nature and terminology of the homologous curves are somewhat unique in the development of thermal-hydraulic systems models. Therefore, curve development therefore is often a source of confusion for the model developer. The remainder of this section is intended to reduce this confusion by explaining the terminology and the development process.

Two sets of pump homologous curves provide the relationships among head, flow, and speed (termed the head curves) and among torque, flow, and speed (termed the torque curves). These curves are non-dimensionalized by the rated head, rated torque, rated flow, and rated speed specified for the pump. Next, the curves are expressed in terms of unique independent variables (the ratio of normalized flow to normalized speed).

Four modes of pump behavior are possible: normal pump, energy dissipation, normal turbine, and reverse pump. These modes are summarized in **Table 4.6-1**. Because the curves are normalized, two regions are needed for each of these modes to describe either the head or torque curves: one for when the independent variable ranges from 0.0 to 1.0 and one when the independent variable is greater than 1.0. In this latter case, the independent variable is inverted. Because of this inversion, the homologous curves can compress the entire range of pump performance between independent variable values of-1.0 and 1.0. A full set of homologous head curves contains eight regimes (two each for the normal pump, energy dissipation,

normal turbine, and reverse pump modes). Similarly, a full set of homologous torque curves also contains eight regimes. It is a requirement that input be provided for all sixteen head and torque regimes.

Table 4.6-1 Modes of pump operation.

Mode	Characteristics
Normal pump	Positive flow and positive speed
Energy dissipation	Negative flow and positive speed
Normal turbine	Negative flow and negative speed
Reverse pump	Positive flow and negative speed

Figure 4.6-1 shows an example set of homologous head curves with the standard regimes indicated. Note that the regimes and modes correspond with each other: regimes 1 and 2 to the normal pump mode, regimes 3 and 4 to the energy dissipation mode, regimes 5 and 6 to the normal turbine mode, and regimes 7 and 8 to the reverse pump mode. The normalized independent and dependent variables are defined in terms of the head, flow, and speed ratios as shown in the figure. A similar set of eight regimes is needed for the homologous torque curves. For these, the head ratio is replaced by the comparable torque ratio.

Generally, pump test data are available for the normal pump mode. Typical pump test curves provide head as a function of flow at a constant speed and this data is sufficient to generate the head homologous curves for regimes 1 and 2. This is accomplished by tabulating the pump test data for flow and head, normalizing the data based on the rated conditions, and calculating the requisite nondimensional independent and dependent variables shown in **Figure 4.6-1**. The torque homologous curves for regimes 1 and 2 may be calculated by extending the tabulation from the head curve calculation and considering that the normalized torque is equal to the product of the normalized flow and normalized head divided by the normalized efficiency.

Pump test data supporting development of the head and torque curves for regimes 3 through 8 are generally unavailable. It is suggested that a user with no other option consider using data similar to that shown in **Figure 4.6-1** for regimes 3 through 8 as a means of obtaining reasonable responses in the off-normal regimes. It is important that the regime curves form a closed pattern, such as is shown in **Figure 4.6-1**. Regime intersection points are summarized in **Table 4.6-2**. An open pattern will result in grossly-inappropriate pump model performance or job failure whenever a transition is attempted from one curve regime to another across a discontinuity.

Normal pump	(+Q,+ω)	{ HAN, HVN
Energy dissipation	(-Q,+ω)	{ HAD, HVD
Normal turbine	(-Q,- ω)	{ HAT, HVT
Reverse pump	(+Q,- ω)	{ HAR, HVR

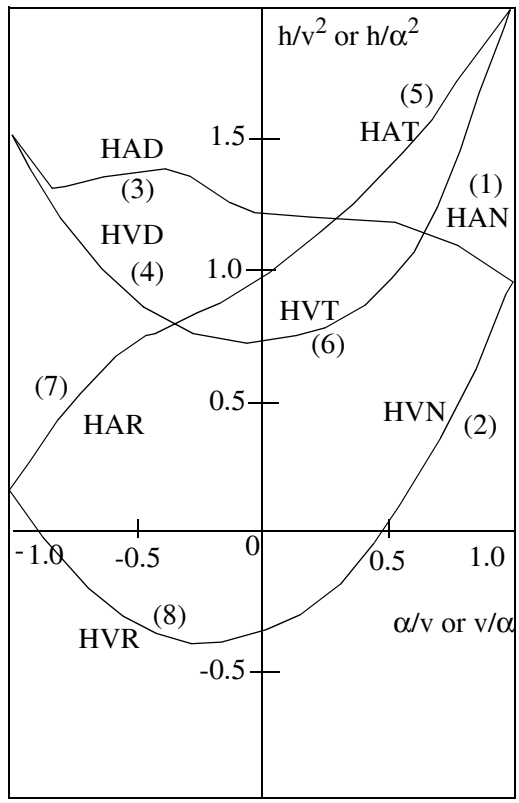

$h = H/H_R$ head ratio
$v = Q/Q_R$ flow ratio
$\alpha = \omega/\omega_R$ speed ratio

Figure 4.6-1 Single-phase homologous head curves for 1-1/2 loop MOD1 Semiscale pumps.

Table 4.6-2 Homologous curve regime consistency requirements.

Curves	Independent Variable
3 and 1	0.0
1 and 2	1.0
2 and 8	0.0

Table 4.6-2 Homologous curve regime consistency requirements. (Continued)

Curves	Independent Variable
8 and 7	-1.0
7 and 5	0.0
5 and 6	1.0
6 and 4	0.0
4 and 3	-1.0

4.6.8.3 Pump Two-Phase Degradation Characteristics. The two-phase degradation of pump performance is specified using difference and multiplier curves. The degraded pump head is calculated by subtracting the product of the head multiplier and the single-phase/two-phase difference head curves from the single-phase head curves. A similar method is used to calculate the degraded torque. Formulas for these relationships are found in the code manual (Volume II). Note that the multiplier curves are specified as functions of pump void fraction and that the multipliers should equal 0.0 at void fractions of 0.0 and 1.0.

Unfortunately for the code user, the data needed to develop the two-phase difference and multiplier input often are not available. As is the case for the off-normal, single-phase pump, homologous curve regions described in Section 4.6.8.2, pump manufacturer test data neglect many of the pump operating regimes needed to fully characterize pump behavior. Two-phase difference and multiplier data for a Semiscale pump are available and are documented in the code manual (Volume I); however, no assurances can be given regarding its use in other applications.

The two-phase pump performance degradation model is based on the pump-center void fraction. This can be the cause of anomalies if the void fraction data on which the degradation behavior is based were taken at the pump inlet. The difference between pump inlet and center void fractions can be especially significant for highly voided inlet conditions at very low pressures. As the fluid passes into the pump, the voids are compressed and the pump center void fraction may be much lower than that at the pump inlet. If this is expected to be an important effect, then the user may modify the input to account for it. This modification is made by specifying the multiplier curves as functions of pump-center void fractions that have been adjusted to reflect the differences between pump entrance and center conditions.

The user should note that the RELAP5-3D© pump does not contain a cavitation model. The two-phase degradation behavior discussed above regards voiding within the pump hydrodynamic cell based on convection of void from upstream cells or bulk flashing within the pump itself. A mechanistic model of flow on the pump impeller is not included. If the user finds that pump cavitation effects are to be expected and data regarding pump performance during cavitation are available, then an approximation of cavitation behavior may be implemented independently. This implementation involves monitoring conditions using RELAP5-3D© control variables and, where appropriate based on the data, reducing the pump speed to simulate cavitation effects.

4.6.8.4 Pump Speed Control. Control of the RELAP5-3D© pump model speed is a frequent source of confusion to users. The pump simply has two modes of operation, untripped and tripped. In the untripped mode, the pump speed may be controlled by the user in any manner desired. For example, a constant pump speed may be specified, or the pump speed may be controlled as any function of other problem variables via a RELAP5-3D© control variable. In the tripped mode, the user may not control the pump speed. It is determined by the dynamics of the pump rotating masses and interaction between the pump and its fluid through the homologous curves. In a typical application, a pump's speed may be controlled as a constant until some pump trip condition is met (e.g., attaining a low system pressure). Following trip, the pump coasts down to zero speed.

The trip condition of the pump is determined by two trips. The first trip is contained on Card CCC0301, where CCC is the pump component number. When this first trip is false, the pump is considered to be untripped, and when it is true, the pump is considered to be tripped. The second trip is found on Card CCC6100. When this second trip is false, the pump is considered to be tripped and when it is true, the pump is considered to be untripped. Furthermore, the status of the second trip overrides that of the first trip, and if the second trip is specified as 0 then the condition of the second trip is assumed to always be true. To avoid confusion, it is recommended that the first and second trips be specified as complementary trips. In this manner, there is no doubt to the user whether or not the pump is tripped.

For an untripped pump, its speed is determined by the time-dependent pump velocity control cards and table on Cards CCC6100, CCC6101, etc. The term “time-dependent” is inaccurate. These cards provide the flexibility to specify the pump speed as a function of any calculated parameter.

For a tripped pump, RELAP5-3D© calculates its speed response based on an inertial coastdown from its condition at the time of trip and the hydrodynamic interaction between pump and fluid based on the pump homologous curves. The user is referred to Section 4.6.8.1 regarding the importance of specifying realistic pump-bearing friction so that under normal circumstances pump coastdown will result in a locked rotor.

To illustrate pump speed control, consider an example of trying to control the speed of pump 135 as a function of the pressure in hydrodynamic cell 340010000. This example might represent a turbine-driven pump whose speed is known as a function of the pressure available to drive the turbine. In addition, assume that when the pressure in cell 340010000 falls below 50 psia that the turbine and pump are tripped and coast down. First, the two pump trips are developed as follows:

```
535   p   340010000 lt null 0 50. l -1.

635 -535 and -535 n 0.
```

Trip 535 is initiated as false and will latch true when the pressure falls below 50 psia. Trip 635 is specified as the complement of trip 535 and therefore is initiated as true and will remain true until it is latched false when trip 535 turns true. Trip 535 will be used as the trip on Card 1350301 and trip 635 will be used in the speed table that will appear as follows:

1356100	635	p	340010000
1356101	0.	0.	
1356102	50.	27.	
1356103	300.	125.	
1356104	700.	180.	
1356105	1000.	185.	
1356106	5000.	185.	

The speed table, which correlates pressure and pump speed, therefore is in effect whenever trip 635 remains true. The table uses the pressure in cell 340010000 as the independent search variable. The table dependent variable is the pump speed, in this case in rpm. When trip 635 turns false and trip 535 turns true, speed control switches from the speed table to an inertial coastdown.

Note that the user is not constrained to specifying pump speed in table format as in the above example. The pump speed may be determined in any manner desired using RELAP5-3D© control variables. The control variable and pump speed are then related by a one-to-one correspondence pump speed table. To illustrate, in the above example say that the pump speed is calculated using control variables and that the output of this process is control variable 405, which represents the desired pump speed. Speed control is effected by using a speed table such as

1356100	635	cntrlvar	405
1356101	0.	0.	
1356102	1.e6	1.e6	

With this method, the pump speed is set equal to the value of control variable 405 by the table.

4.6.8.5 Energy Balance. The total pump power added to the fluid by the pump ($\tau\omega$) is separated into a hydraulic term $gH[(\alpha_f\rho_f v_f + \alpha_g\rho_g v_g)A]$ and a dissipation term (DISS). The dissipation term arises from turbulence in the pump and is added to the pump volume as heat. In a closed system, the hydraulic head from the pump is balanced by the sum of wall friction losses and form losses in the momentum equation. These losses should also appear as energy source terms in the energy equation, but only the wall friction terms are implemented in the default code. The default code should also add the form loss (code calculated abrupt area change loss and user-supplied loss) dissipation to the energy equation. This dissipation was removed in RELAP5/MOD2 because of temperature problems (i.e., overheating), and thus

it is not present in RELAP5-3D© . The dissipation can be activated by the user in the input deck, however the user is cautioned that temperature problems may occur.

4.6.9 Multiple-Junction Component

The multiple-junction component is a new model in RELAP5-3D© and as such has had little user experience. By using this component, the user can specify many junctions with a single component. This provides an alternative to specifying many independent single-junction components.

The advantages of using the multiple-junction component are that (a) the input required for the junctions is minimized, and (b) data for all junctions may be consolidated in a single location in the input stream. These features make this option attractive for cross-connecting two parallel flow paths.

4.6.10 Accumulator Component

The accumulator component is a lumped parameter component for which special numerical treatment is given. The model provides a realistic calculation of the phenomena associated with tank draining, gas bubble expansion, wall heat transfer, and interphase heat transfer at a quiescent liquid-gas interface. The accumulator therefore lets the user simulate a nitrogen-charged accumulator and surge line system. The accumulator must be initialized with the vapor/gas and liquid spaces in thermal equilibrium and with no surge line flow. Note that the accumulator tank, tank wall, surge line, and outlet check valve junction are included in the accumulator model.

During a simulation where an accumulator tank is calculated to drain, the special accumulator models are disabled and the model reverts to a normal single-volume hydrodynamic solution scheme. The gas used in the accumulator is assumed to be nitrogen, which must be one of the noncondensable gas types specified on Card 110.

4.6.11 Multi-Dimensional Component

The multi-dimensional component (indicated by MULTID in the input cards) defines a one-, two-, or three-dimensional array of volumes and the internal junctions connecting the volumes. The multi-dimensional component is described as a three-dimensional component but can be reduced to two or one dimensions by defining only one interval in the appropriate coordinate directions. The geometry can be either Cartesian (x,y,z) or cylindrical (r,θ,z). In cylindrical geometry, the r-direction can start at zero or nonzero, and θ can cover 360 degrees (i.e., full circle, annulus) or can cover less than 360 degrees (i.e., semicircle, wedge). Input checking uses 360 ± 0.0005 degrees for the region that represents 360 degrees.

An orthogonal, three-dimensional grid is defined by mesh interval input data in each of the three coordinate directions. The edges of the hydrodynamic volumes are defined by the grid lines.

The 3-D component is designed primarily for reactor applications, particularly in the vessel (i.e., core, downcomer) and steam generator. These reactor components have solid structures in the fluid path

(i.e., core, steam generator) or have a short length in the radial direction (i.e., downcomer) that result in the form loss, wall friction, and interphase friction models being the primary source terms in the momentum equations. For these applications, the viscous stress and turbulence terms are not as important and are not included in the RELAP5-3D© 3-D model. Since these terms are not present in the code at this time the RELAP5-3D© 3-D model should not be used to model large open tanks.

The 3-D component can be connected to 1-D components externally via either a normal junction or a crossflow junction, depending on the actual flow paths. The 1-D to 3-D external junction connection to an external 3-D face should be restricted to 1 junction per external 3-D face. The 3-D component can also be connected to 3-D components externally via either a normal junction or a crossflow junction. The 3-D to 3-D connection is restricted to the same direction (i.e., radial to radial, axial to axial, etc.).

The 3-D cylindrical component can be modeled either as a solid cylinder or a hollow cylinder. It can also be modeled as a cylindrical wedge. All of these geometries are implemented.

The volume factors and junction area factors must be specified explicitly for the 3-D component. A totally blocked internal 3D junction (i.e., the junction area factor is zero) is treated as a time dependent junction with no flow. In the junction initial condition cards, the junction face number must be specified explicitly.

For pure radial, frictionless flow in and out of a 3-D solid cylinder, the pressure profile within the 3-D component is not sensitive to the number of radial nodes, i.e., a 3-ring model produced as good pressure results as an 8-ring model. The user does not have to increase radial nodes to increase accuracy.

For a multid component (no drops option), as with the annulus component, all the liquid is in the film and none is in the drops when the flow regime is annular mist.

An example of the information card CCC0001, rotational angle data card CCC0002, and mesh interval cards CCC0XNN for the multi-dimensional hydrodynamics Cartesian coordinate option (based on **Figure 4.6-2**, which has 4 x volumes , 3 y volumes and 5 z volumes) is as follows:

```
CCC0000  'cartsian' multid
*          nx    ny    nz     vel     cyl
CCC0001    4     3     5      0       0
*          angles
CCC0002    0     0     0
*      mesh interval data
CCC0101  0.4   4  * x
CCC0201   0.3   3  * y
CCC0301   0.5   5  * z
```

See Volume II, Appendix A for further details on the cards.

.

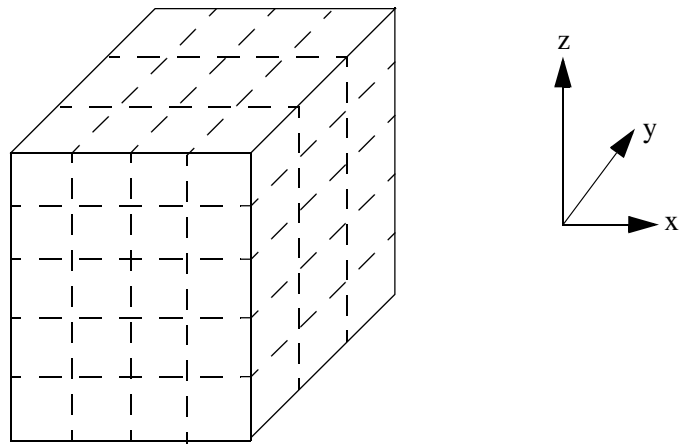

Figure 4.6-2 Multi-dimensional hydrodynamics Cartesian grid.

A similar example for the multi-dimensional hydrodynamic cylindrical coordinates option (based on **Figure 4.6-3**, which has 3 r volumes, 6 Θ volumes, and 4 z volumes) is as follows:

.

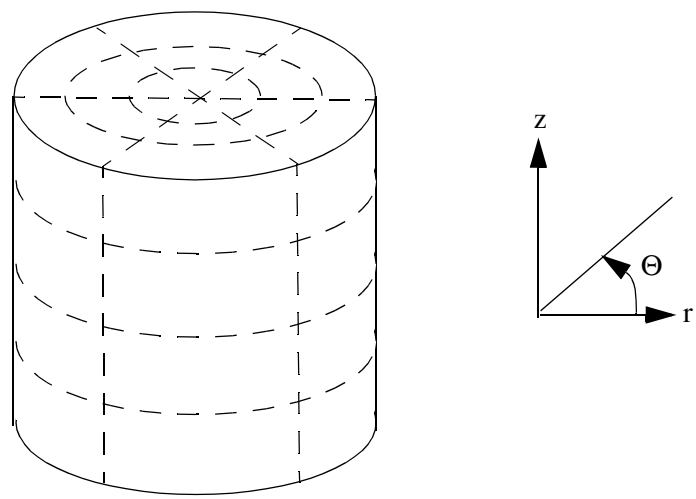

Figure 4.6-3 Multi-dimenstional hydrodynamics cylindrical grid.

```
CCC0000  'cylinder'  multid
*          nr     ntheta     nz      vel      cyl
CCC0001   3       6         4        0         1
*            angles
CCC0002       0       0      0
*            mesh interval data
CCC0101   0.25  1  0.30  3 * r
CCC0201  60.0   6 * theta
CCC0301  0.5     4 * z
```

See Volume II, Appendix A for further details on the cards.

Regarding the volume overlay format used in the control flags cards CCC1NNN, friction data cards CCC2NNN, and initial condition cards CCC6NNN, the first 6 words (words 1-6) are of the form

x1 x2 y1 y2 z1 z2.

The cards are applied to volumes CCCXYYZZ0, where

$$x1 \le X \le x2$$
$$y1 \le YY \le y2$$
$$z1 \le ZZ \le z2 \quad .$$

A volume may be referenced by the overlay more than once. The last data referencing a volume from the overlays are used. Default data are used for volumes not referenced by an overlay.

Regarding the junction overlay format used in the data control flags cards CCC3001-CCC5999 and initial condition cards CCC7001-CCC9999, the first seven words (words 1-7) are of the form

x1 x2 y1 y2 z1 z2 F.

The cards are applied to junction CCCXYYZZF, where

$$x1 \le X \le x2$$
$$y1 \le YY \le y2$$
$$z1 \le ZZ \le z2$$

and F is the face number and must be 2, 4, or 6. A junction may be referenced by the overlays more than once. The last data referencing a junction from the overlay are used. Default data are used for junctions not referenced by the overlays. Face numbers are shown in diagrams in Volume II, Section 2.1.

4.6.12 Reference

4.6-1. Westinghouse Electric Co., Central Electricity Generating Board, and Electric Power Research Institute, *Coincident Steam Generator Tube Rupture and Stuck Open Safety Relief Valve Carryover Tests--MB-2 Steam Generator Transient Response Test Program*, NUREG/CR-4752, EPRI NP-4787, TPRD/L/3009/R86, WCAP-11226, March 1987.

4.7 Heat Structures

RELAP5-3D© heat structures are used to represent metal structures such as vessel walls, steam generator tubes, fuel rods, and reactor vessel internals in a facility. Each heat structure is defined to have a "left" side and a "right" side. Conventions such as these are described below. Each side of a heat structure may be connected to at most one hydrodynamic volume. However, more than one heat structure may be connected to the same hydrodynamic volume. Temperatures and heat transfer rates are computed from the one-dimensional form of the transient heat conduction equation for non-reflood and from the two-dimensional form of the transient heat conduction equation for reflood.

The user should consider that the average fluid conditions in the hydrodynamic volume are assumed to interact with the entire heat structure except under stratified flow conditions. Consider, for example, a core boil-off situation where a well-defined core mixture level falls below the top of the core. As the level falls through the elevation span of a core cell, the fuel rod-to-fluid heat transfer will degrade because the heat transfer coefficients are void fraction weighted or level height weighted. A separate calculation is made for the vapor/gas above the level and for the liquid below the level. The value of each heat transfer coefficient is decreased according to the level height in the cell if the level tracking model is on, or decreased according to the liquid volume fraction in the cell if the level tracking is not on (uses the default vertical stratification model).

This section discusses general and specific practices for using heat structures. In a model, heat structures are referenced by a heat structure/geometry numbers (termed CCCG) followed by a sequence number. As a general practice, it is recommended that the CCC correspond to a hydrodynamic volume to which it is connected. Note that this correspondence is not required; however, if it is used, then interpretation of the code output is greatly facilitated because heat structures and hydrodynamic cells bear the same identifying numbers.

As an example, consider a reactor vessel downcomer that is modeled using a 6-cell pipe component number 570. Heat structures should represent the reactor vessel wall, thermal shield, and core barrel. Because the geometries of the vessel wall, thermal shield, and core barrel are different (i.e., their cross-sections and materials are different), it will be necessary to use three separate heat structure/geometries to represent them. In this example CCCG = 5701 might be used to represent the vessel wall, 5702 the thermal shield, and 5703 the core barrel. Within each of these heat structure/geometries, the user would specify six heat structures, consistent with the six axial hydrodynamic cells. For each CCCG, heat structure 1 would connect to hydrodynamic cell 570010000, heat structure 2 would connect to hydrodynamic cell 570020000, and so on. Eighteen heat structures are therefore specified using a minimum of input, and the

heat structure numbers shown in the output can be easily correlated with their locations. In this example, heat structure 5703006 is easily recognized as representing the core barrel wall adjacent to the sixth downcomer hydrodynamic cell.

Heat structure data are input in three sections. The first section dimensions the input and provides general data regarding the heat structures. The second section provides input data common to all heat structures in the heat structure/geometry group. The third section provides data unique to each individual heat structure. These inputs and their effects are discussed separately.

4.7.1 General Heat Structure Input and Dimensioning Data

General heat structure data are entered on heat structure Card 1CCCG000, where CCCG is the heat structure/geometry number. The data on this card dimensions the input. The parameter NH specifies the number of heat structures input for this heat structure/geometry. The number of radial mesh points and the geometry type (rectangular, cylindrical, or spherical) are also specified.

There is an option on Card 1CCCG000 to decouple a heat structure from the hydrodynamic components. Decoupling means that the heat structure responds to the hydraulic conditions in the hydrodynamic volumes to which it is attacted, but the energy removed from (or added to) the heat structure through the surface by convection is not added to (or removed from) the hydrodynamic volumes.

The steady-state initialization flag is an important input that is a frequent source of errors. If this flag is set to 0, the mesh point temperatures entered with the heat structure input are used for the initial condition. If this flag is set to 1, the initial mesh point temperatures are calculated by RELAP5-3D© for a consistent steady-state solution with the boundary conditions specified (such as fluid temperatures, code-calculated heat transfer coefficients, and internal heat sources). Note that initial temperatures must be entered so that input processing may be satisfied, even if the 1 flag is used.

The left boundary coordinate must be input. The value entered here is the reference point from which the remainder of the geometry is specified. For rectangular geometries, zero may be entered, and all remaining geometrical specifications become the distance from the left surface. A recommended convention is to use the left surface as the primary and innermost heat transfer surface. For example, a flat plate with a convective boundary condition to a fluid on one side and insulated on the other would be modeled with the fluid on the left surface and an insulated condition on the right surface. In this case, $x = 0$ represents the fluid/plate surface and a value equal to the plate thickness represents the insulated boundary. For a cylindrical pipe with fluid inside, the left coordinate would be set to the inner radius of the pipe and the right surface would equal the outer radius of the pipe. The coordinate references for spherical geometries are treated in the same manner as for the cylindrical geometry. For fuel rods, it is standard practice to use a left coordinate of 0 (representing the centerline of the rod) and to specify an adiabatic condition on the left surface.

The remaining fields on Card 1CCCG000 indicate reflood options. Limited user experience data are available as a resource for the RELAP5-3D© reflood models. Similarly, the gap conductance, metal-water reaction, and fuel cladding deformation models have limited user experience.

On restart problems, all heat structures in a CCCG heat structure geometry may be deleted from the problem by entering

1CCCG000 delete

4.7.2 Heat Structure Input Common to All Structures in the Group

Card 1CCCG100 identifies the mesh location and format flags. A 0 mesh location flag indicates that the heat structure mesh, composition, and source distribution data are input as a part of this heat structure. To conserve input for cases where these data are shared among many heat structures, they only need to be input once for one heat structure/geometry group. A mesh location flag of the CCCG from that group is specified for the other inputs.

The mesh format flag is a source of user confusion. This flag concerns the manner in which the data pairs needed to lay out the heat structure mesh are to be input. Two options are available. The first option (mesh format = 1) lists pairs of the number of intervals in the region and the right boundary coordinates. The second option (mesh format = 2) lists pairs of distances and intervals. In both cases, the specifications begin at the left surface and work toward the right surface.

To illustrate the mesh format options, consider the following example: modeling a pipe with a cladding on the inner surface as shown in **Figure 4.7-1** The cladding inside radius is 0.475 ft, the cladding/pipe interface is at a radius of 0.5 ft, and the pipe outer radius is 0.6 ft. A heat structure mesh is desired where one node is located on the inner surface, one node is in the center of the cladding, one node is at the clad/pipe interface, three evenly spaced nodes are within the pipe wall, and one node is on the outer surface. There will be six mesh intervals between the seven mesh points. For this problem, a left coordinate of 0.475 ft is specified. Using mesh format option 1, the remaining mesh points are specified as follows:

1CCCG101 2 0.5 4 0.6

This statement is to be read “from the left coordinate of 0.475 ft, use 2 evenly-spaced intervals to a coordinate of 0.5 ft, then use 4 evenly-spaced intervals to a coordinate of 0.6 ft.” With this input, the code places the nodes at a radii of 0.475, 0.4875, 0.5, 0.525, 0.55, 0.575 and 0.6 ft. Note that the right surface is defined by the last entry, in this example at a radius of 0.6 ft. With mesh format 2, the distance between nodes and the number of such intervals would be specified for this problem as follows:

1CCCG101 0.0125 2 0.025 6

This statement is to be read “from the left coordinate of 0.475 ft, use interval thicknesses of 0.0125 ft through interval 2, then use interval thicknesses of 0.025 ft through interval 6.’’ It is recommended that the

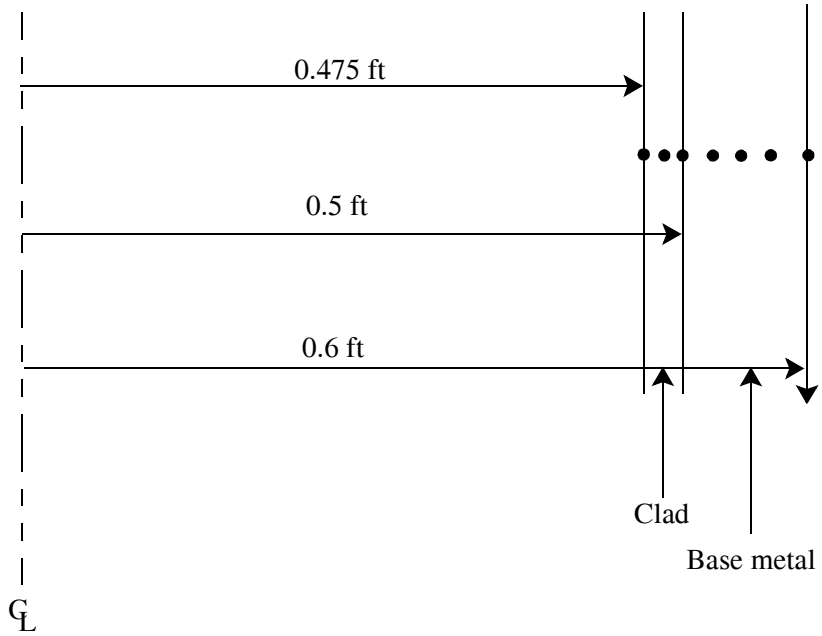

Figure 4.7-1 An example of mesh format dimensions.

user select one of these methods and use it exclusively to avoid input errors caused by mixing the two formats. Furthermore, mesh format 2 is recommended because it is consistent with the format used for heat structure compositions and heat source distributions.

The heat structure compositions are specified using pairs of material composition identifiers and interval numbers. The composition number is the index corresponding to a set of material properties that are entered elsewhere in the input listing. Continuing the above example, consider that the cladding is stainless steel with composition number 7 and the pipe is carbon steel with composition number 8. This data would be input using

1CCCG201 7 2 8 6

This is to be read “use stainless steel for intervals 1 and 2 and carbon steel for intervals 3, 4, 5, and 6.’’

The distribution of heat sources among the heat structure intervals is specified using the same format. This input is needed even if no internal heat sources are modeled, in which case zeros may be entered. If zeros are entered, the internal heat source will be zero. Pairs of relative source values and interval numbers are entered. The relative source values merely determine how the absolute internal source power for this heat structure (defined later in the heat structure specification) is to be distributed radially.

Experience has shown that with too small a mesh interval, oscillations can occur. This is particularly evident when modeling a gap, where it is recommended only one mesh interval be used.

4.7.3 Heat Structure Input Specific to Individual Structures

Initial temperature data are required, regardless of the initial condition flag status on Card 1CCCG000. A number of options are available and are controlled by the initial temperature flag. If the flag is 0, -1, or missing, then temperatures must be input as a part of the heat structure input data. To use temperatures input with another heat structure, an initial temperature flag equal to the CCCG of that heat structure is input. If the flag is 0, one temperature profile is entered and this profile is used at all axial positions. The profile is entered as a temperature followed by a node number. If the initial temperature flag is -1, then temperatures values are input until a temperature has been specified for each mesh point in each of the heat structures in the group. To allow the code to initialize the temperatures, the input data requirements may be met by using an initial temperature flag of 0 and specifying dummy temperatures. For example, for a 10-node heat structure, input

1CCCG401 300. 10

The left and right boundary condition cards specify the fluid volumes to which the heat structure is connected, and the heat transfer surface areas. In addition, these cards allow the user to implement an absolute boundary condition, such as a surface temperature or surface heat flux.

Difficulties have been encountered in the past by users who have mixed boundary condition types within a heat structure geometry group. As a result, it is recommended within each heat structure geometry group that all left boundary condition types be the same and that all right boundary condition types be the same. A set of left and right boundary conditions is needed for each of the heat structures in the heat structure/geometry group. Note that each of these heat structures shares the common cross-sectional geometry described in Section 4.7.2. A zero entry is used when representing an adiabatic or insulated boundary condition.

The “increment” entry is frequently misunderstood. The increment is used with the sequential expansion data entry format to compress data into a minimum number of cards. For example, if input is needed for five heat structures connected in sequence to one-dimensional volumes 120010000 through 120050000, then a boundary volume number of 120010000 is entered and an interval of 10000 is specified. With this input, the boundary volume number for heat structure 1 is 120010000, the boundary volume number for heat structure 2 is 120020000 (= 120010000 + 10000), and so on. Another example is as follows: If input is needed for five heat structures connected in sequence to multi-dimensional volumes 120101011 through 120101051, then a boundary volume number of 120101011 is entered and an interval of 10 is specified. With this input, the boundary volume number for heat structure 1 is 120101011, the boundary volume number for heat structure 2 is 120101021 (= 120101011 + 10), and so on.

There are several numbers allowed for Word 3 on the 1CCCG501 through 1CCCG599 and 1CCCG601 through 1CCCG699 Cards to activate convective boundary conditions. A 1, 100 or 101 all

give the default values. The numbers 1, 100, and 101 use the same correlations. The number 101 is recommended; the numbers 1 and 100 are allowed so that the code is backwards compatible with previous input decks. The default convection, boiling, and condensation correlations were derived mainly based on data from internal vertical pipe flow. Other possible input values are shown in **Table 4.7-1**. When modeling a vertical bundle (Word 3 = 2 on Card 1CCCG000, Word 3 = 110 or 111 on Cards 1CCCG501 through 1CCCG599 or Cards 1CCCG601 through 1CCCG699), the rod or tube pitch-to-diameter ratio should be input on the 1CCCG801 through 1CCCG899 or 1CCCG901 through 1CCCG999 Cards. This has the effect of increasing the convective part of heat transfer such that users can input the true hydraulic diameter and get reasonable predictions.

Table 4.7-1 Cards 1CCCG501 through 1CCCG599 and 1CCCG601 through 1CCCG699, Word 3, convection boundary type.

Word 3	Geometry Type
1, 100, 101	Default
102	Parallel plates (ORNL ANS geometry)
110	Vertical bundle without crossflow
111	Vertical bundle with crossflow
130	Flat plate above fluid
134	Horizontal bundle

Other boundary condition options that can be selected are: setting the surface temperature to a hydrodynamic volume temperature, obtaining the surface temperature from a temperature-versus-time general table, obtaining the heat flux from a time-dependent general table, or obtaining heat transfer coefficients from either a time- or temperature-dependent general table. For the last option, the associated sink temperature can be a hydrodynamic volume temperature or can be obtained from a temperature-versus-time general table or control varaible. These options are generally used to support various efforts to analyze experimental data and do not contain all the physics present in the boundary condition options that use the heat transfer correlations. The user needs to use caution when using the heat flux boundary condition. If the heat flux is too large (positive or negative), a numerical failure may result.

The heat transfer surface area may be specified in one of two ways as determined by the surface area code. By using the 0 code, the surface area is entered directly as the following word. By using the 1 code, RELAP5-3D© will automatically calculate the surface area for cylindrical and spherical geometry types based on the number entered as the following word. In cylindrical geometries, the number entered is the cylinder length. In spherical geometries, the number is the fraction of a whole sphere (e.g., 0.5 is used to represent a hemisphere). As an example, consider the situation where the heat transfer from 10,000 cylindrical fuel rods is to be modeled. In this case, the cross-section of a single fuel rod is defined using the input described in Section 4.7.2. A surface area code of 1 is used on the boundary condition card and a number equal to 10,000 times the length of the fuel rods is entered.

The source data cards (1CCCG701 through 1CCCG799) are used to specify the power generated within each heat structure. This determination is made by starting with the total power specified by the "source type." The input power may come from a reactor kinetics routine, a control variable, or a general table input. The power deposited within each heat structure is defined by the product of the total power and the internal source multiplier. By using the direct heating multipliers for the left and right boundary volumes, a portion of the total power may be deposited within the fluid, such as for gamma heating. Note that the power calculated here is distributed within each heat structure as provided on the 1CCCG301 through 1CCCG399 source distribution cards described in Section 4.7.2. The total of the internal source multipliers and direct heating multipliers over all heat structures in a core should equal 1.0.

The additional left and right boundary cards (1CCCG801 through 1CCCG899, 1CCCG901 through 1CCCG999) are used to specify the heat transfer hydraulic diameters (heated equivalent diameters) for each heat structure and to provide data needed for the heat transfer package. The diameter suggested for horizontal plates is the area divided by the perimeter. For vertical bundles, use the 12-word format and input the rod or tube pitch-to-diameter ratio. The natural convection length for inside horizontal pipes should be the inside diameter. RELAP5-3D© does not contain natural convection correlations for vertical or horizontal bundles. Currently users are encouraged to use the heated bundle height in the vertical direction for the natural convection length on outer surfaces. The McAdams natural convection correlation (see Volume IV) is applied to heat structures in horizontal cells. The Churchill-Chu correlation is applied to heat structures in vertical cells except for geometry type 130 (flat plate). Type 130 always uses McAdams.

4.8 General Tables

General tables are used to conveniently implement various numerical functions into a problem. A general table is entered using cards of the format 202TTTNN where TTT is the table number and NN is the sequence number of the data input. Note that data must be entered for any table that is referenced elsewhere in the problem; however, not all tables entered need to be referenced.

The first data table card entered, 202TTT00, specifies the table type, optional trip, and modification factors as described in the input data requirements manual. Available table types include power, heat transfer rate as a function of time, heat transfer coefficient as a function of temperature, temperature as a function of time, reactivity as a function of time, and normalized area as a function of normalized length.

A common user error involves misunderstandings regarding conversion factors when using tables with a type other than reactivity as a function of time. It is recommended that the user carefully check the implied units for the table type to be employed and then, as a part of the model checkout process, the user should double-check the performance of the table model.

A general table commonly is used to supply core power data as a function of time after reactor trip. An example table for this application is shown in **Figure 4.8-1**. The example problem is performed using British units; therefore, the core power is specified as 2,700 megawatts in "factor 2" of Table 900. The table operates based on trip 1722 that turns true when the reactor trips. As long as trip 1722 is false, the

table normalized power associated with the -1 time value is used. In this case, 1.0 is used. Following reactor trip, the normalized power declines with time, representing the effects of scram rod insertion and decaying core heat. Note that the time argument in the table is to be read "time in seconds after the last occurrence of trip 1722 turning true." Therefore, it is recommended that the reactor trip be modeled using a "latched" trip (see Section 4.4).

```
*-----------------------------------------------------------------------------------------------------------
*                                  table no. 900 - power
*-----------------------------------------------------------------------------------------------------------*
*table      table type      trip no.      factor 1      factor 2
20290000     power           1722          1.0           2700.
*
*table                       time                        power
20290001                     -1.                          1.0
20290002                      0.                          1.0
20290003                      0.1                         0.8382
20290004                      0.5                         0.2246
20290005                      0.8                         0.1503
20290006                      2.0                         0.09884
20290007                      4.0                         0.08690
20290008                      8.0                         0.07375
20290009                     10.0                         0.06967
20290010                     30.0                         0.05060
20290011                     60.0                         0.03977
20290012                     80.0                         0.03604
20290013                    150.                          0.02997
20290014                    300.                          0.02565
20290015                    800.                          0.02073
20290016                   1500.                          0.01749
20290017                   2500.                          0.01489
20290018                   3000.                          0.01401
*
```

Figure 4.8-1 An example of core power data - function of time.

4.9 Reactor Kinetics

This section provides guidance to the reader regarding the use of the RELAP5-3D© space-independent "point" reactor kinetics model. There is also a multi-dimensional neutron kinetics option. The point kinetics formulation uses core-average fluid conditions, weighting factors, and feedback coefficients to determine a total reactivity for driving the kinetics calculation of total core power. Once the total core power has been determined, it is then distributed among the fuel heat structures in an invariant manner. For many simulation problems, a point kinetics formulation may be an adequate approximation of the physical processes. The user should, however, carefully consider the adequacy issue for the particular application. If

it is determined that point kinetics is inadequate, then it may be possible, through an iterative process between RELAP5-3D© and a more functional kinetics code, to converge upon the true solution.

Core power may be specified in the model by using an input table, a control variable, or by the reactor kinetics model. This selection is made according to the "source type" entered as the first word on the heat structure source data cards (format 1CCCG701 through 1CCCG799). If a source type less than 1000 is entered, then a heat source based on a general table with the same number is used. The point reactor kinetics model is used to power a heat structure when source types 1000, 1001, 1002, 1003, or 1004 are specified. If a source type between 10001 through 19999 is entered, then the heat source is based on the control variable equal to the source type minus 10000. The nodal reactor kinetics model is used to power a heat structure when source types 100010 through 199994 are specified. See the input data requirements manual (Volume II) for the option most appropriate for your application.

An example reactor kinetics input data set, shown in **Figure 4.9-1**, will be used to illustrate use of this code feature. The input values shown are not to be considered representative of actual data for any plant. Users should employ data appropriate for their particular applications.

The reactor kinetics input begins with Card 30000000, which specifies POINT (for point reactor kinetics) or NODAL (for nodal reactor kinetics) followed by the feedback type. Five feedback options are available: SEPARABL, TABLE3, TABLE3A, TABLE4, and TABLE4A. The feedback data required to be input are determined by the selection. The SEPARABL option is the simplest and most frequently used. With SEPARABL, the data entered specify the moderator fluid density, moderator fluid temperature, and fuel temperature feedback information (the volumes and heat structures from which the densities and temperatures are used, and the reactivity feedback coefficients for each). With this option, a change in one of the three parameters does not affect the others.

The TABLE3 and TABLE4 options require the input of multi-dimensional tables that allow the user to specify interactions among the reactivity feedback functions (e.g., the dependence of the moderator density feedback as a function of the moderator fluid temperature may be modeled). With TABLE3, a three-dimensional table linking moderator fluid density, moderator fluid temperature, and fuel temperature feedback is entered. With TABLE4, a four-dimensional table linking the above three effects of TABLE3 with boron concentration is entered. The TABLE3A and TABLE4A options also require the input of multi-dimensional tables. With TABLE3A, a three-dimensional table linking void fraction, liquid moderator temperature, and fuel temperature feedback is entered. With TABLE4A, a four-dimensional table linking the above three effects of TABLE3A with spatial boron density is entered. The SEPARABL option is most often selected, simply because the data needed to input TABLE3, TABLE3A, TABLE4, and TABLE4A feedback are often unavailable.

In addition to the required input for the selected feedback option type, the user may specify additional reactivity components by indicating what tables or control variables are to be used for that purpose. In the **Figure 4.9-1** example, Table 920 (input at the bottom of the input list) specifies the

```
*****************************************
*      reactor kinetics example input                    *
*****************************************
*
30000000    point separabl
*
30000001     gamma-ac     1848.24e6     0.0     329.412     1.0     1.0
*
*     scram table
*
30000011     920
*
*     moderator density reactivity table
30000501      6.3725          0.006
30000502    40.0000          0.100
30000503    46.8710          0.120
30000504    48.0000          0.130
30000505    70.3065          0.250
*
*     fuel temperature doppler reactivity table
30000601    32.0              0.2
30000602    4500. 0          0.1
*
*     volume weighting factors and temperature coefficients
*                  vol cell              wt fact       react $
30000701     514010000     0     .07391     0.0
30000702     514020000     0     .18250     0.0
30000703     514030000     0     .24359     0.0
30000704     514040000     0     .24359     0.0
30000705     514050000     0     .18250     0.0
30000706     514060000     0     .07391     0.0
*
*     fuel temperature doppler weighting factors and coefficients
*                  ht struct              wt fact       react $
30000801     5141001         0     0.0            -1.654e-6
30000802     5141002         0     0.0            -4.085e-6
30000803     5141003         0     0.0            -5.452e-6
30000804     5141004         0     0.0            -5.452e-6
30000805     5141005         0     0.0            -4.085e-6
30000806     5141006         0     0.0            -1.654e-6
*     reactivity scram table
20292000     reac-t     554
20292001      0.0        0.0
20292002      1.0        0.0
20292003      2.0     -0.35
20292004      4.0     -6.55
20292005      5.0     -9.60
20292006      1.e6   -9.60
*
```

Figure 4.9-1 An example of a reactor kinetics input data set.

reactivity of the scram rod in dollars as a function of time after reactor trip (trip 554). The table is implemented as a reactivity component on Card 30000011.

Card 30000001 specifies the constants that control the kinetics calculation. Note that the initial reactor power is entered in watts regardless of whether British or SI units are used in the problem. This convention differs from other code features where power is entered in megawatts for British units.

The initial reactivity entered on Card 30000001 is used to compute the neutron source strength. An initial reactivity of zero implies a neutron source strength of zero. This will cause computational difficulties for long shutdown transients. For long shutdown transients, the computation of exponentials with large negative exponents will cause a near underflow condition with the attendant loss of accuracy. Because the point kinetics time step is controlled based on the accuracy of the power computation, the kinetics module will subcycle to point kinetics time step to accurately compute the very small fission power. This subcycling causes to computation to slow down dramatically. This can be avoided by using a very small, negative initial reactivity (e.g., $-1.0e^{-60}$ dollars). This insures a nonzero neutron source strength. The small source strength has no practical effect on the power computation except of eliminating the subcycling and subsequent slowdown of the computation.

The total reactivity feedback in dollars is calculated by the code using the formulation

total reactivity = initial reactivity - bias reactivity + reactivity from tables

+ reactivity from control variables $+ \Sigma[W_\rho \bullet R_\rho(\rho) + a_W T_W]$

$+ \Sigma[W_F \bullet R_F(T_F) + a_F T_F]$.

In this equation, W_ρ is the weighting factor entered on Cards 30000701 through 30000799 for the hydrodynamic volumes, and W_F is the weighting factor entered on Cards 30000801 through 30000899 for the heat structures. The a_{Wi} and a_{Fi} coefficients are entered on these same cards. The functions R_ρ and R_F are those specified on Cards 30000501 through 30000599 (density) and Cards 30000601 through 30000699 (fuel temperature). The subscript “W” indicates “for the liquid” and the subscript “F” indicates “for the fuel.” The first sum is over the user-specified hydrodynamic cells and the second sum is over the user-specified heat structures. Usually, either the weighting factor or the coefficient is input, but not both.

In the **Figure 4.9-1** example, the core is made up of six hydrodynamic cells (514010000 through 514060000) and six fuel rod heat structures (5141001 through 5141006). The moderator fluid density feedback is calculated using a table and the fuel temperature feedback is calculated using coefficients. The moderator fluid density feedback depends explicitly on the input weighting factors. The fuel temperature feedback depends on the input coefficients, which are a constant times the same weighting factors used for the moderator density. The weighting factors normally sum to 1.0 and are based on the power profile. The factors are usually based on linear weighting, as in this example, or power squared weighting. For the fuel temperature feedback calculation, the heat structure volume average temperature of the fuel pellet is used.

The temperatures of the gap and cladding regions are not used. This average temperature is determined using the heat structure composition data input on Cards 1CCCG201 through 1CCCG299 (CCCG is the heat structure/geometry identifier). The user is referred to the users input manual for this card series. Structure regions with positive composition numbers (i.e., fuel) are included in the average temperature calculation while regions with negative composition numbers (i.e., gap and cladding) are not.

It is important for the user to carefully consider the total reactivity equation. The moderator temperature, moderator density, and fuel temperature reactivities are calculated using the initial fluid and heat structure conditions. To this, the initial values of any table-entered and control-variable-entered reactivities are added. Next, the "initial reactivity" is added (this was input by the user). This sum is exactly and automatically balanced by the code with the bias reactivity such that the initial total reactivity is zero. In other words, the code assumes that the reactivity must be zero at time zero, and biases the calculation to force that condition. This code-calculated bias reactivity is displayed at the end of the input processing edit and is carried as a constant reactivity contribution throughout the calculation.

The authors' preference for entering reactivity feedback is to select the SEPARABL option, defeat its reactivity effect by entering zero for the reactivity coefficients in the required feedback input, and then calculate total reactivity using control variables. One advantage of this method is that the components of reactivity are more easily understood by the user because they are independently calculated and tracked. The component reactivities are summed into a total reactivity, and a single control variable is then used to drive the reactor kinetics calculation. Another advantage of this method is that each of the reactivity components may be biased to zero at the initial condition such that the component reactivity changes during a calculation are easily displayed and interpreted. In this way, the reactivity components, the user-input initial reactivity, and the code-calculated bias reactivity all are zero at the initial time.

In practice, before attempting to incorporate reactor kinetics into a model, it is recommended that a satisfactory steady-state first be obtained with the desired core power specified through an input table rather than by kinetics. This step ensures that the initial core conditions are appropriate so that little change in reactivity will occur when the calculation is started. When this has been accomplished, the power source is shifted from the input table to the kinetics package (by changing the source types on the core heat structure cards). A calculation is then performed to attain an adequate full-power steady-state condition with the kinetics package activated. At this point, the user may find that small deficiencies in the original steady-state conditions may cause the kinetics-calculated steady core power to be marginally different than the desired value. This situation may be remedied by implementing a shim control reactivity (via a control variable) to drive the model to the exact core power desired. This shim control system would then be defeated (by specifying a constant control variable with a value equal to the final value of the shim reactivity) before beginning any transient simulations.

4.10 Control Variables

RELAP5-3D© control variables are an extremely flexible and useful feature of the code. Contrary to the name, control variables are suited to many functions in a calculation beyond the simulation of a

control system. Control variables may be used to relate diverse types of calculated data, perform mathematical and logical operations, and cause actions to occur in the model.

The user must first understand the control variable input and its functions. Consider the following control variable input developed for the purpose of calculating the difference in mass flow rates between junctions 15601 and 15602 in lb_m/s and limiting this difference to between 0 and 5,000 lb_m/s:

```
20515600    delmdot    sum    2.2046    1000.    0    3    0.    5000.

20515601    0.    1.0    mflowj    156010000

20515602          -1.0    mflowj    156020000
```

Control variables are entered using cards of the format 205CCCNN, where CCC is the control variable number and NN is the input card sequence number, or using cards of the format 205CCCCN, where CCCC is the control variable number and N is the input card sequence number. Many different types of control variables are available. The formats for the 00 or 0 sequence cards are identical for all of the types, while the formats of the 01, 02 , ... or 1, 2, ... sequence cards are different for each type. These format conventions, original and extended, are described in the user input data requirements manual (Volume II). All control variables in a problem must use the same convention. Examples of control variable applications shown here use the original format (205CCCNN).

In the above example, control variable 156 has been assigned the name “delmdot,” a descriptive abbreviation for differential mass flow. The sum control variable type has been indicated with a scale factor of 2.2046, the conversion factor from kg/s to lbm/s. An initial value of 1,000. has been specified and the “0” entry following it means to use the specified initial value (an entry of 1 would indicate that the code should calculate the initial value based on the initial values of the mass flow rates). The “3” entry means that minimum and maximum values are to be applied. The remaining fields indicate the minimum allowable value is 0 and the maximum allowable value is 5,000. References to the external data and coefficients to be used appear on sequence cards 01 and 02. The 0 entry is an additive constant while the 1 and -1 entries are the coefficients.

As a transient proceeds, the mass flow rate through junction 156020000 will be multiplied by -1.0 and added to the product of the junction 156010000 mass flow rate and the coefficient 1.0. A frequent source of user error is the oversight that all internal references to data within control variables are performed in SI units. Thus the references to the junction mass flow rates return values in kg/s, not lb_m/s, even if the problem is being solved in British units. The scale factor 2.2046 converts the differential mass flow in kg/s to lb_m/s.

Note that the minimum and maximum apply to the final value of the control variable, after the scale factor has been applied. Moreover, the user should remember that the output of a control variable by definition is considered dimensionless by the code. In this example, the user has created control variable

156 to represent the differential mass flow rate in lbm/s; however, to the code, the output of the control variable has no dimension. Therefore, the user must ensure that units are properly accounted for.

The user should be aware that control variables are evaluated in numerical order according to the control variable number. If a reference is made to control variable "A" within control variable "B," then the value of "A" will be as of the previous time step if A > B and as of the current time step if A < B. In some situations, understanding this convention is critical. Finally, the user should understand that control variables are solved last, after the hydrodynamic and heat transfer solutions have been obtained. Therefore, the values of the control variables on any time step reflect the thermal-hydraulic conditions for the current time step. Conversely, actions taken as a result of control variables attaining a particular status will not occur until the following time step.

A summary of the control variable types and brief statements regarding their functions appears in **Table 4.10-1**. Generally, additive constants and multiplicative coefficients may be implemented within each control variable, in addition to the functions specified. Using appropriate combinations of control variables, virtually any algebraic, logical, or functional action may be taken in the model. The user is referred to the input data requirements manual for the exact formulas for each control variable type.

Table 4.10-1 Control variable types and their functions.

Control Variable Type	Function
SUM	Add parameters
MULT	Multiply two parameters
DIV	Divide one parameter by another
DIFFRENI	Differentiate a parameter response; exact initial value must be specified
DIFFREND	Differentiate a parameter response; no initial value needed, an approximation
INTEGRAL	Integrate a parameter
FUNCTION	Access a user-input table with an independent variable and return the dependent variable
STDFNCTN	Standard functions (e.g., trigonometry) of an independent variable
DELAY	Use the previous time value of a parameter
TRIPUNIT	Binary operator keyed to a trip status
TRIPDLAY	Binary operator (equals 0 if trip is false and equals time trip last turned true if trip is true)
POWERI	Raise a function to an integral power
POWERR	Raise a function to a real power

Table 4.10-1 Control variable types and their functions. (Continued)

Control Variable Type	Function
POWERX	Raise one function to a power defined by another function
PROP-INT	Proportional-integral Laplace operator
LAG	Lag Laplace operator
LEAD-LAG	Lead-lag Laplace operator
CONSTANT	Specifies a constant value
PUMPCTL, STEAMCTL, FEEDCTL	Specifies pump speed, steam, and feed control for self-initialization
SHAFT	Links turbines, pumps, and loads

When a user first sets up a model, it is recommended that control variables be developed to provide continuous indications of various important process variables. Examples of these variables for a PWR include steam generator secondary-side mass, primary-to-secondary heat transfer, and steam generator and pressurizer levels. When used in this way, the control variable provides a convenience to the user because these frequently-desired parameters are calculated by the code as a part of the calculation. The advantage is that the user does not need to assemble these data using a post-processing routine, an often cumbersome and time-consuming job.

Beyond convenience, situations arise where data must be calculated using a control variable or they will be lost. These situations regard any process involving integration (e.g., tracking an integrated break flow). It is not possible to reconstruct an accurate record of integrated break flow using a post-processing routine because the RELAP5-3D© restart/plot file contains the mass flow data only at the user-requested plot point time interval. All data for time steps between these points are therefore lost. To track integrated break flow, an INTEGRAL control variable is used to integrate the break mass flow parameter. With this method, the break junction mass flow rate is integrated by the code at each time step and thus, the output of this control variable represents a true indication of integrated break flow.

To illustrate the process of using control variables in an actual problem, consider the following rather complex simulation problem. Core power is calculated using the reactor kinetics model, and one of the reactivity components needed is based on the control rod position. The control rod reactivity worth is known as a function of its position. The initial position is known, and it will be assumed its reactivity is zero at the initial position. The control rod has two modes of operation: prior to, and after scram. Prior to scram, the rod performs a power shim function at a limited maximum rate of travel, attempting to control the reactor at the desired operating power. After scram, the rod takes on a safety function, and is driven into the core via a spring mechanism. This mechanism provides an initial 6-g acceleration to the rod, decays linearly to 1-g when the rod has been driven in 60 mm, and then has a constant 1-g acceleration thereafter. For this problem, a normalized rod position of 0 represents fully withdrawn, and a position of 1 represents fully inserted.

The control system input developed to simulate the control rod reactivity is shown in **Figure 4.10-1**. This input leads to determining the current normalized control rod position (the "new" position, CNTRLVAR 967) and the reactivity associated with that rod position. The reactivity output (CNTRLVAR 970) is an evaluation of the rod position vs. the worth table (Table 970) at the new rod position. The current value of CNTRLVAR 970 therefore is used as a component dollar reactivity (see the reactor kinetics description in Section 4.9).

The control variable logic is required to determine the current or new normalized rod position at each time step. The new position is calculated by adding the change in normalized rod position during the current time step (of length Δt) to the old rod position according to the formula

new rod position = old rod position + [(shim speed) or (scram speed)]Δt.

Referring to **Figure 4.10-1**, the current time step size is first calculated in CNTRLVAR 943. This is accomplished by subtracting the problem time on the previous time step (CNTRLVAR 944) from the current problem time (time 0). This technique takes advantage of the order in which control variables are evaluated. When evaluating CNTRLVAR 943, which references CNTRLVAR 944, the latter has a value as of the previous time step.

Binary operators are developed (in CNTRLVAR 945 and 946) to represent the scram status (defined elsewhere in the problem using trip 510). CNTRLVAR 945 has a value of 1 before scram and a value of 0 afterwards; the reverse is true for CNTRLVAR 946. These binary operators are used to determine which of the rod speeds (shim or scram) is to be used.

The shim speed is determined by the power error, which is the difference between the current core power and the desired core power. The power error is calculated with CNTRLVAR 949, which takes the difference between the current reactor power (rktpow 0) and the desired core power (350 MW). For stability, this error is lagged by 0.5 seconds in CNTRLVAR 950. The lagged power error is then related to the current shim rod speed in CNTRLVAR 954. A maximum normalized rod travel rate of 0.001586 s^{-1} was simulated in the shim mode. This condition was met by specifying these minimum and maximum values in CNTRLVAR 954. The coefficient 7.93e-5 was selected to provide a maximum rod travel rate when the magnitude of the core power error exceeds 20 MW.

Next, the rod speed in the scram mode is calculated using CNTRLVAR 956. This is accomplished by hand calculating the rod speed as a function of time after scram (based on the initial 6-g acceleration and linear acceleration decline to the gravity-drop situation). The output of this hand calculation is recorded in Table 956, which lists the normalized rod speed as a function of the time since the scram trip 510 turned true. Note that a "reac-t" table type is specified. This was done only to non-dimensionalize the table. The dependent variable is actually normalized rod speed, not reactivity. CNTRLVAR 956 simply evaluates Table 956 and returns a normalized scram rod speed.

```
$=================================================================$
*ctlvar     name      type     factor     init     f   c     min      max
20594300  "timest"    sum        1.       .0025    0   0
*
*ctlvar          a0          coeff          variable name       parameter no.
20594301         0.            1.                time                0
20594302                      -1.              cntrlvar             944
$=================================================================$
*ctlvar     name      type     factor     init     f   c     min      max
20594400 "oldtime"    sum        1.        30.     0   0
*
*ctlvar          a0          coeff          variable name       parameter no.
20594401         0.            1.                time                0
$=================================================================$
*ctlvar     name      type     factor     init     f   c     min      max
20594500 "noscram"  tripunit    1.0        1.      1   0
*
*ctlvar     trip no.
20594501     -510
$=================================================================$
*ctlvar     name      type     factor     init     f   c     min      max
20594600  "scram"   tripunit     1.        0.      1   0
*
*ctlvar     trip no.
20594601     510
$=================================================================$
*ctlvar     name      type     factor     init     f   c     min      max
20594900  "powerr"    sum        1.     .0211123   0   0
*
ctlvar          a0          coeff          variable name       parameter no.
20594901       -350.        1.e-6             rktpow               0
$=================================================================$
*ctlvar     name      type     factor     init     f   c     min      max
20595000 "lagerr"     lag        1.     .02135538  0   0
*
*ctlvar          tau-1                      variable name       parameter no.
20595001          0.5                          cntrlvar            949
$=================================================================$
*ctlvar     name      type     factor     init     f   c     min      max
20595400  "shimsp"    sum        1.     1.69348-6  0   3   -.001586   .001586
*
ctlvar          a0          coeff          variable name       parameter no.
20595401         0.         7.93e-5           cntrlvar            950
```

Figure 4.10-1 An example of control system input to simulate control rod reactivity.

.

```
$=================================================================$
$        table 956 - scram rod speed as function of time after trip
*-----------------------------------------------------------------$
*table        table type     trip no.     factor 1     factor 2
20295600        reac-t        510          1.           1.
*
*table                       time                      reactivity
20295601                     -1.                        0.
20295602                      0.                        0.
20295603                      0.005                     0.2931
20295604                      0.01                      0.5802
20295605                      0.015                     0.8555
20295606                      0.02                      1.1133
20295607                      0.025                     1.3485
20295608                      0.03                      1.5561
20295609                      0.035                     1.7321
20295610                      0.04                      1.8727
20295611                      0.045                     1.9752
20295612                      0.0491                    2.0292
20295613                      0.06                      2.1360
20295614                      1.0                      11.3480
$=================================================================$
*ctlvar     name       type       factor      init      f   c     min
20595600  "scramsp"   function   0.651466    0.        0   1     0.
*
*ctlvar     srch arg.    name     srch arg. no.     table no.
20595601       time                 0                956
$=================================================================$
*ctlvar     name       type       factor      init      f   c     min      max
20595900  "shimsp"    mult         1.        1.69348-6  0
*
ctlvar    variable name    parameter no.        variable name        parameter no.
20595901     cntrlvar          954                 cntrlvar              945
$=================================================================$
*ctlvar     name       type       factor      init      f   c     min      max
20596000  "scramsp"    mult         1.        0.        0
*
ctlvar    variable name    parameter no.        variable name        parameter no.
20596001     cntrlvar          956                 cntrlvar              946
$=================================================================$
*ctlvar     name       type       factor      init      f   c     min      max
20596100  "rodspeed"   sum          1.       1.69348-6   0
*
ctlvar          a0          coeff            variable name        parameter no.
20596101        0.            1.                cntrlvar              959
20596102                      1.                cntrlvar              960
$=================================================================$
*ctlvar     name       type       factor      init      f   c     min      max
20596500  "deltapos"   mult         1.       4.2337-9    0
*
ctlvar    variable name    parameter no.        variable name        parameter no.
20596501     cntrlvar          961                 cntrlvar              946
$=================================================================$
*ctlvar     name       type       factor      init      f   c     min      max
20596700  "newpos"     sum          1.       .278668    0   3     0.       1.
```

Figure 4.10-1 An example of control system input to simulate control rod reactivity. (Continued)

.

```
*
ctlvar          a0          coeff          variable name      parameter no.
20596701        0.            1.              cntrlvar            968
20596702                      1.              cntrlvar            965
$=================================================================$
*ctlvar     name      type      factor      init      f   c     min      max
20596800  "oldpos"    sum         1.      .278668     0   3      0.       1.
*
ctlvar          a0          coeff          variable name      parameter no.
20596801        0.            1.              cntrlvar            967
$=================================================================$
$  table 970- control rod reactivity as function of normalized rod position
$              (biased to zero at initial position)
*-----------------------------------------------------------------------------------------------------*
*table          table type      trip no.      factor 1      factor 2
20297000          reac-t
*
*table                          time                      reactivity
20297001                         0.                          3.93
20297002                         0.1218                      3.50
20297003                         0.2195                      2.33
20297004                         0.2790                      0.
20297005                         0.4391                     -6.27
20297006                         0.6098                    -18.18
20297007                         0.7805                    -28.89
20297008                         1.                        -32.78
$=================================================================$
*ctlvar     name      type      factor      init      f   c     min      max
20597000  "rodreac"  function     1.      .01299627    1   3    -32.78    3.93
*
*ctlvar     srch arg. name      srch arg. no.      table no.
20597001       cntrlvar            967               970
$=================================================================$
```

Figure 4.10-1 An example of control system input to simulate control rod reactivity. (Continued)

The inverse binary operators developed in CNTRLVAR 945 and 946 are now applied to the shim and scram speeds, respectively in CNTRLVAR 959 and 960. At all times, one of these speeds will be zero. The two speeds are added together in CNTRLVAR 961 that now represents the current normalized rod speed.

The change in normalized rod position for the current time step is calculated in CNTRLVAR 965, which multiplies the current normalized rod speed (CNTRVAR 961) by the time step size (CNTRLVAR 943). The new normalized rod position is calculated by adding the change in rod position to the rod

position in the previous time step. This new position (CNTRLVAR 967) is then used to determine an associated rod worth by evaluating Table 970 with CNTRLVAR 967. CNTRLVAR 970 is used as a dollar reactivity in the kinetics calculation.

This example is intended to demonstrate the power and flexibility that RELAP5-3D© control variables afford the user for modeling complex operations.

4.11 RELAP5-3D© Internal Plotting Routine

RELAP5-3D© contains a rudimentary routine for generating the data needed for plotting calculational results. The capabilities of the internal plotting package are not considered adequate for most applications. An external post-processing plotting routine is used at the INEEL for this purpose.

5 Pressurized Water Reactor Example Applications

This section provides example RELAP5-3D© modeling applications for PWRs. The purpose of this section is to provide guidance for developing general plant models that may be used for analyzing a wide variety of small break LOCAs and operational transients. The user is cautioned that no model is generally applicable for simulating all transient scenarios. Care should be taken so that modeling and nodalization are appropriate for the particular application.

5.1 Westinghouse Plants (Base Case)

This section provides guidance for modeling Westinghouse PWRs. The specific example discusses a three-loop plant design; modeling of two- and four-loop designs is similar. A complete input listing for the example plant is included in Appendix B. The following subsections discuss the example model by regions.

5.1.1 Reactor Vessel

Reactor vessel nodalization is shown in **Figure 5.1-1**. Flow enters from the cold legs into the reactor vessel downcomer annulus in branch 102. The modeler should note that the hydrodynamics associated with branch and pipe components are identical. The branch component may have its own associated external junctions, while the pipe component may have only internal junctions (therefore relying on single-junctions, valves, or branch junctions for external connections). The modeler's choice between pipe and branch components is one of convenience. The primary reactor vessel flow path is downward through branch 104 and annulus 106 to the lower plenum, component 110. An annulus component is identical to a pipe component except an annular flow regime map is used. A portion of the inlet flow is diverted around the downcomer through bypass pipe 116. This bypass is a large volume, but low flow region between the core former plates and core barrel. In the example plant, the bypass is a region of downward flow, effectively a downcomer bypass. In some plants this region is in upward flow and is a core bypass.

Another portion of the inlet flow is diverted upward through pipe 100 and through the upper reactor vessel bypass nozzles into the upper head, branch 126. Still another portion of the inlet flow is bypassed directly to the hot leg through the slip-fit between the core barrel assembly and reactor vessel wall at the hot leg nozzles. This path is represented by the junction from branch 102 to upper plenum branch 120.

Core inlet branch 112 recombines the downcomer and bypass flows before entering the heated core that is represented by pipe 114. The upper plenum is represented by branches 118 and 120, and by pipe 122. Branch 129 represents the guide tubes that route a portion of the core exit flow from the upper plenum to the upper head.

Note that in the example PWR model, the hot and cold legs are connected to the reactor vessel at the centers of the reactor vessel components. Standard practice calls for the hot and cold leg connections to be made with crossflow junctions (see discussion in Section 3.4.5). The elevation spans of branches 102 and 120 should be such that their midpoints are at the elevation of the hot and cold leg centerlines.

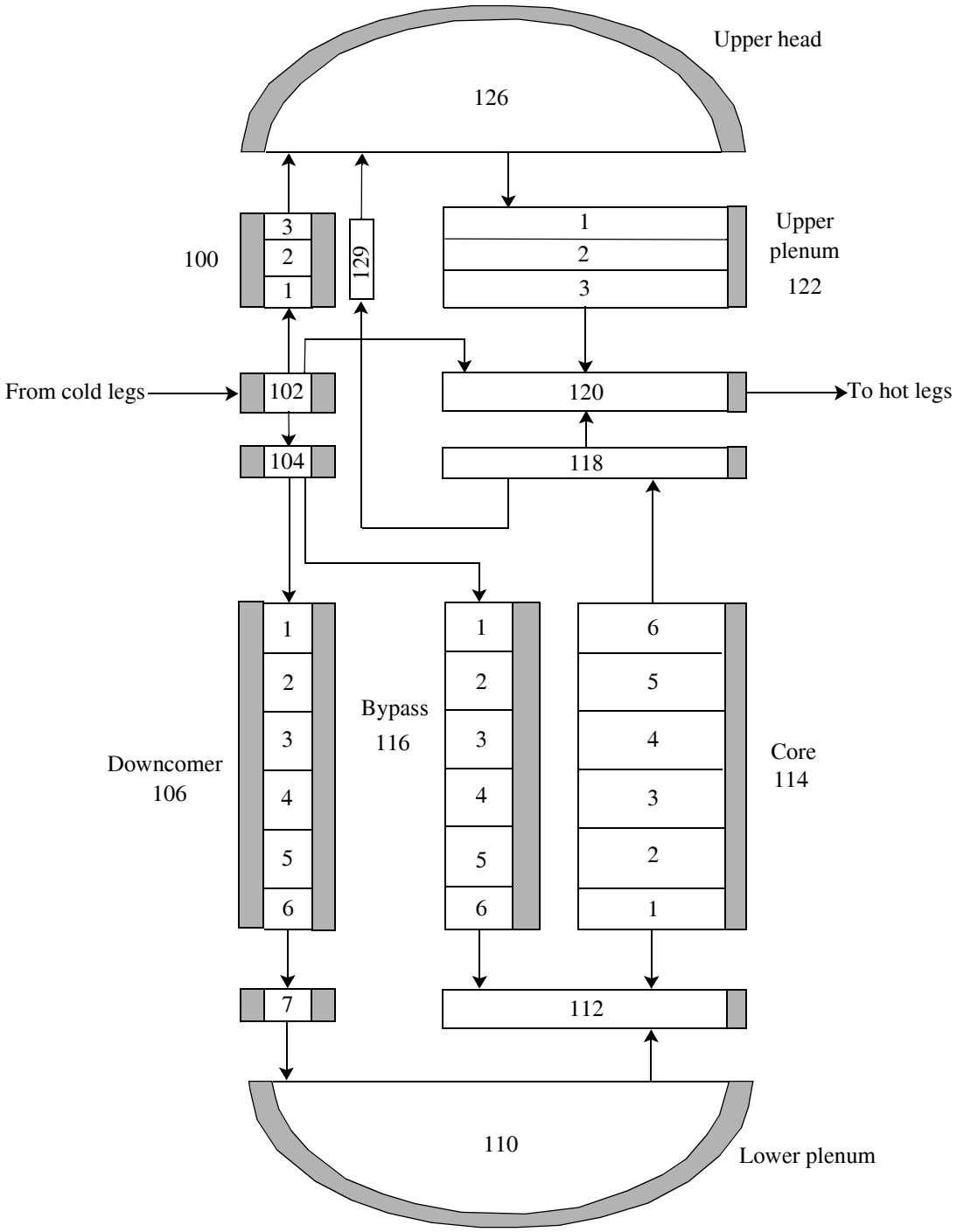

Figure 5.1-1 Nodalization of reactor vessel.

The desired flow splits through the various reactor vessel bypasses generally are attained in the model by adjusting the calculated flow losses (forward and reverse loss coefficients) as needed to best represent the actual losses associated with orifices and complex geometries. To minimize iterations, this process should proceed from the flow paths with the largest flows to those with the smallest flows. In general, when representing small leakage paths between large volumes (e.g., the nozzles between pipe 100 and branch 126), the modeler should not use a highly reduced junction flow area (e.g., that of the orifice itself). Instead, a junction flow area equal to that of the smaller of the two adjacent volumes should be used along with an increased loss coefficient as needed to limit the flow to the desired value.

Heat structures are used to represent the fuel pins, the major internal structures (thermal shield, core barrel wall, core former plates, guide tube walls, etc.), and the reactor vessel cylindrical shell and spherical heads. These heat structures allow simulation of inter-region heat transfer, such as between the core and bypass regions through the core former plates.

The noding for the reactor vessel shown in **Figure 5.1-1** represents the standard nodalization scheme used at the INEEL for small break LOCA simulations. The elevations of the junctions between nodes are consistent between parallel flow paths (such as the downcomer, bypass, and core regions); this scheme was developed to prevent numerical oscillations between parallel channels during early development of the code. Nodalizing the core with six axial cells is a compromise scheme allowing observation of core uncovering, yet being relatively economical. If an accurate simulation of the core uncovering process is needed, then the user is advised to use a finer nodalization near the top of the core. Additionally, six-cell core noding provides some resolution of core axial void profiles that affect reactor- kinetics core power calculation. If very accurate void feedback simulation is needed, then the user should consider finer nodalization, core-wide. Nodalization of the upper plenum and upper head regions provides sufficient resolution of flashing phenomena and liquid levels in these regions during accident simulations.

5.1.2 Hot and Cold Legs and Steam Generator Primaries

Standard INEEL nodalization for one of the primary coolant loops is shown in **Figure 5.1-2**. Flow from the reactor vessel enters hot leg pipe 404 and progresses through branch 405 into the steam generator inlet plenum, branch 406. It was necessary to break the hot leg into two components so that the pressurizer surge line may be attached at the proper location. It is not possible to connect an external junction (such as the surge line) at a pipe internal junction (such as would have occurred if the entire hot leg had been modeled with a single 4-cell pipe).

Pipe 408 represents the many thousands of steam generator tubes. These tubes are lumped into a single component using the same philosophy as is explained in Section 5.5 for the lumping of two coolant loops. Representing the steam generator tube primaries with an 8-cell pipe component is a nodalization scheme that compromises between calculational fidelity and expense. This scheme has proven is generally useful, however the modeler should individually consider the nodalization requirements for the problem to be modeled. The tube nodalization scheme shown may not be sufficiently detailed to model phenomena associated with reflux cooling and greatly reduced secondary-side levels. Branch 410 represents the steam

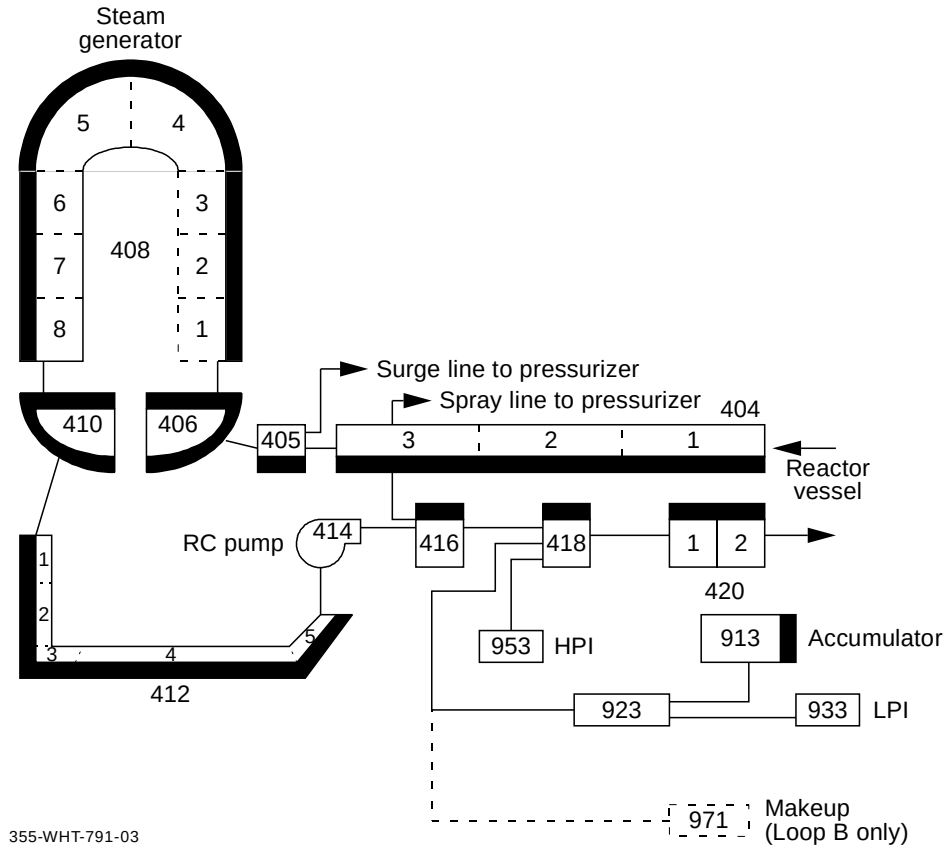

Figure 5.1-2 Nodalization of primary coolant pump (Loop C shown).

generator outlet plenum. Modeling of the steam generator secondary region is described in the following section.

Pipe 412 represents the pump suction cold leg. To ensure proper simulation of behavior in the loop seal region, cell 4 of this pipe is input as horizontal. This orientation allows the formation of horizontally stratified flows at the bottom of the loop seal. It is recommended that at least one horizontal cell be used for simulating loop seal phenomena. Cells 1, 2, 3, and 5 of pipe 412 provide sufficient vertically-oriented calculational cells for simulating the formation of liquid levels in the loop seal region and for simulating countercurrent flow limiting phenomena. The pump component is described separately in Section 5.1.5.

The pump discharge cold leg is modeled with branches 416 and 418 and pipe 420. This nodalization scheme has proven suitable for simulating horizontal stratification of fluid within the cold legs during loss-of-coolant accidents. The nodalization also provides for proper simulation of the fluid temperature distribution in the region; the junction between the branches is located such that the ECC injection site is correctly modeled. The user should remember that RELAP5-3D© provides a one-dimensional representation of the flow and therefore is not capable of resolving thermal stratification of warm and cold liquids within the same pipe. Therefore, although the model may observe the bulk movement of cold ECC

liquid toward the core, it is not capable of observing a stream of cold liquid residing in the bottom of the horizontal pipe. The high and low pressure ECC functions are modeled with pairs of time-dependent volumes and junctions. The ECC fluid injection temperature is specified by the time-dependent volume while the injection flow rate is specified as a function of the cold leg pressure by the time-dependent junction. This method allows simulating the head/flow characteristics of the centrifugal ECC pumps. An example of the method is provided in Section 4.6.4. A RELAP5-3D© accumulator component is used to simulate the injection behavior of the nitrogen-charged accumulators. This lumped-parameter component model mechanistically represents the tank and surge pipe hydrodynamics, heat transfer from tank wall and liquid surface, liquid surface vaporization to the vapor/gas dome, and vapor/gas dome condensation. The accumulator model is described in Section 4.6.10.

Heat structures are employed to model the hot and cold leg piping walls, the steam generator plena heads, the plena separation plate, the tubesheet, and the steam generator tubes.

5.1.3 Steam Generator Secondaries

Standard INEEL nodalization for one of the steam generator secondaries is shown in **Figure 5.1-3**. Modeling of the steam generator primary region was described in the previous section. In the secondary region, main feedwater enters the steam generator downcomer annulus at branch 258 where it is combined with the recirculation liquid flow returning from the separator (component 278) through downcomer annulus branch 254. The combined flow descends through the downcomer (annulus 262) and enters the boiler (pipe 266). Note that the axial nodalization was made consistent between the tube primary, boiler, and downcomer regions. The use of four axial hydrodynamic cells in the boiler region has proven generally useful. However, finer nodalization of the boiler region may be needed for simulating certain transients in which the axial variation in heat transfer plays an important role in determining the outcome of the transient. Some examples are loss of feedwater, steam line break, and small break LOCAs in which reflux cooling occurs. Under these circumstances, eight axial nodes would be more suitable. The user is advised to carefully consider the nodalization needs for a particular application. Overall steam generator performance is dependent on correctly simulating the recirculation ratio (the boiler flow rate divided by the feedwater/steam flow rate) because it controls the heat transfer process on the outside of the tubes. The flow losses associated with the horizontal baffles in the tube bundle region often are not well-characterized. Therefore, if a satisfactory initial agreement with the desired recirculation ratio is not attained, adjustment of input form losses in the boiler may be justified. The two-phase mixture exiting the boiler region flows through the mid-steam generator regions (branches 270 and 274) before entering the separator (branch 278). The separator model is idealized and includes three modes of operation that are determined by the separator void fraction. The void fractions defining these modes are input by the user. At low void fractions, the separator model reverts to a normal branch component, allowing carryover of liquid into the steam dome (branch 282). At high void fractions, the separator also reverts to a normal branch component, allowing carryunder of vapor/gas through the liquid return path into the downcomer. At intermediate void fractions, an idealized separation process is calculated: all liquid is returned to the downcomer and all vapor is passed to the vapor/gas dome. A detailed discussion of separator modeling appears separately in Section 4.6.6.2.

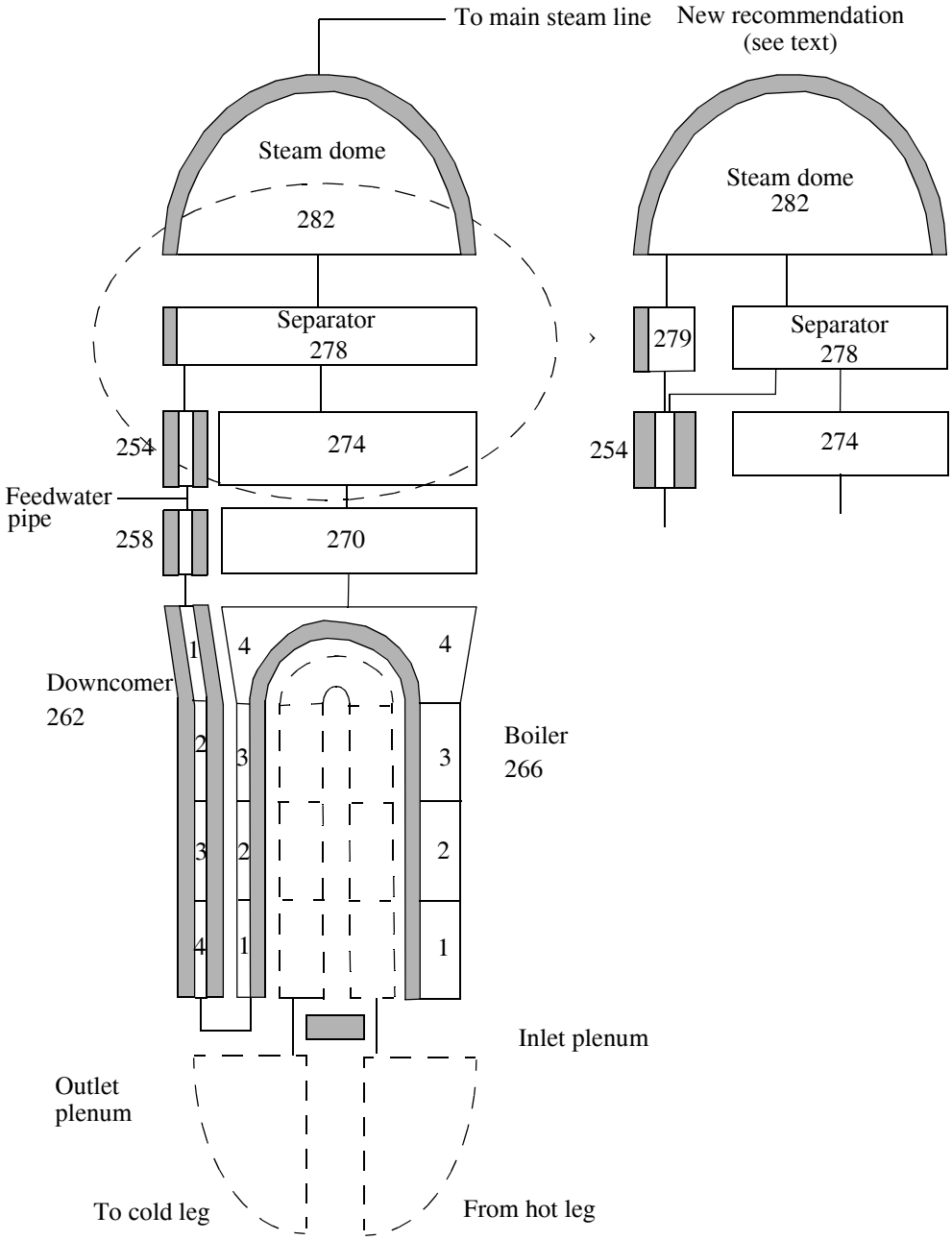

Figure 5.1-3 Nodalization of steam generators.

The modeler should carefully consider the elevation chosen to locate the separator. In the steam generator model, separation will take place based on the void fraction in the separator volume, whose lower and upper elevations are user-specified. In the actual plant, separation is accomplished in two-stages (swirl-vane separators and steam dryers) that reside at two different elevations. Therefore, the model is at best a compromise of the actual separation processes. The selections of separator elevation span, void limits, and maximum volume fractions determine when recirculation is interrupted as the secondary mixture levels decline. Note that these levels decline significantly when a steam generator's heat load is reduced, such as following a reactor trip. The levels also decline significantly during transients where the secondary inventory is depleted, such as during a secondary-side LOCA.

Code modelling improvements since this document was first published has resulted in a better approach to separator-region modeling. **Figure 5.1-3** shows both the original and new recommendations for the separator-region nodalization scheme. The two modeling approaches differ in their representation of the fluid regions within the elevation span of the separators (i.e., over the height of cell 278 in the original nodalization). Over this span, U-tube type steam generators consist of two distinct regions. One region consists of the volume inside the separator cylinders. The other region, roughly annular in shape, consists of the volume between the outermost steam separator cylinders (various separator configurations are employed) and the inside of the steam generator shell. In the original recommendation, the fluid volumes of both regions were included in cell 278, while in the new recommendation the volumes of these regions are modeled separately, in cell 278 and new cell 279.

The new recommended separator-region nodalization is a better modeling approach because it allows representation of separate and distinct fluid behaviors inside and outside of the separator cylinders. The region inside the separator cylinders is one of high resistance to flow (due to internal walls that force the flow to swirl, and thus separate steam and water). During normal steam generator operation, steam flow must negotiate this region to reach the steam line. The region outside the cylinders is one of low resistance to flow (this region is virtually completely open to flow) that is stagnant and contains quiescent liquid level during normal operation. Flow behaviors within the two regions differ even more markedly during secondary-side transients, such as a main steam line break accident. For this accident, secondary-system behavior is highly dynamic, with fluid in all regions rushing toward the outlet nozzle at the top of the steam generator. In this situation, it is important that the two regions be modeled separately so that the liquid flow through and around the separators, and out the steam nozzle can be correctly simulated.

Heat structures are employed in the model to represent the steam generator tubes, the cylindrical shell and spherical head, the cylindrical baffle separating the boiler and downcomer regions, and the internals of the separator and steam dome regions.

It often is difficult to obtain a satisfactory agreement with steam generator full-power conditions. The difficulty arises because the heat transfer coefficient calculated on the outside surface of the steam generator tubes is based on general vertical-pipe correlations rather than correlations that account for the swirling flows present within the tube bundle region. The swirling flow pattern results because horizontal baffles in the boiler direct the flow back and forth across the tube bundle instead of allowing the flow to

proceed axially (vertically upward) through the boiler. The effect of this discrepancy is that tube heat transfer is understated by the code, resulting in excessively high calculated primary coolant temperatures (the temperatures increase until the core heat is driven across the tubes). Since the source of the calculated error is understood (i.e., a general heat transfer correlation is not appropriate for this application), it is recommended that the modeler "adjust" the heat transfer on the outside of the tubes to remedy the discrepancy.

The recommended adjustment is to reduce the input heated equivalent diameter on the heat structure cards for the outer tube surface. It is recommended that instead of using the boiler region hydraulic diameter as the heated diameter that the minimum tube-to-tube spacing (the distance from the outside of a tube to the outside of its neighbor) be used. If the modeler decides not to follow this recommendation, it will be necessary to compromise an important parameter (such as using a lower secondary pressure, higher primary temperature, or lower feedwater temperature) to simulate full-power steam generator operation.

5.1.4 Pressurizer

Standard INEEL nodalization for the pressurizer and its associated systems is shown in **Figure 5.1-4**. The pressurizer upper head is modeled with branch 340 and the pressurizer cylindrical body and lower head are modeled with 7-cell pipe 341. The prizer component may also be used instead of a pipe component. Generally, good agreement with experimental and plant data has been attained for slow and fast pressurizer insurges and outsurges with this nodalization. The surge line is modeled with 3-cell pipe 343.

The functions of the two power-operated relief valves (PORVs) are lumped into valve 344 and those of the three code safety valves are lumped into valve 346. The valves open in response to a significant primary coolant system overpressure. Operation of these valves, including their hysteresis effects, is simulated using the methods described in Example 2 in Section 4.4.2. The pressurizer spray system is modeled with single-volumes 335, 337, and 339, and valves 336 and 338. The spray valves open in response to a mild primary coolant system overpressurization. Operation of these valves is simulated using logic similar to the PORV and code safety valves. The flow area of all valves is that necessary for delivering the rated flow capacity at the rated upstream pressure.

Heat structures are used to represent the cylindrical pressurizer shell and its spherical lower and upper heads, and the pressurizer surge line pipe wall. Heat structures are also used to simulate operation of the pressurizer heaters. Heater power is increased in response to an underpressurization of the primary coolant system pressure and is terminated if a low pressurizer level is sensed.

5.1.5 Reactor Coolant Pump

A reactor coolant pump forces the coolant flow in each of the three coolant loops. The pump component 414 is located as shown on the loop nodalization diagram, **Figure 5.1-2**. A complete discussion of pump modeling is given in Section 4.6.8 and will not be repeated here.

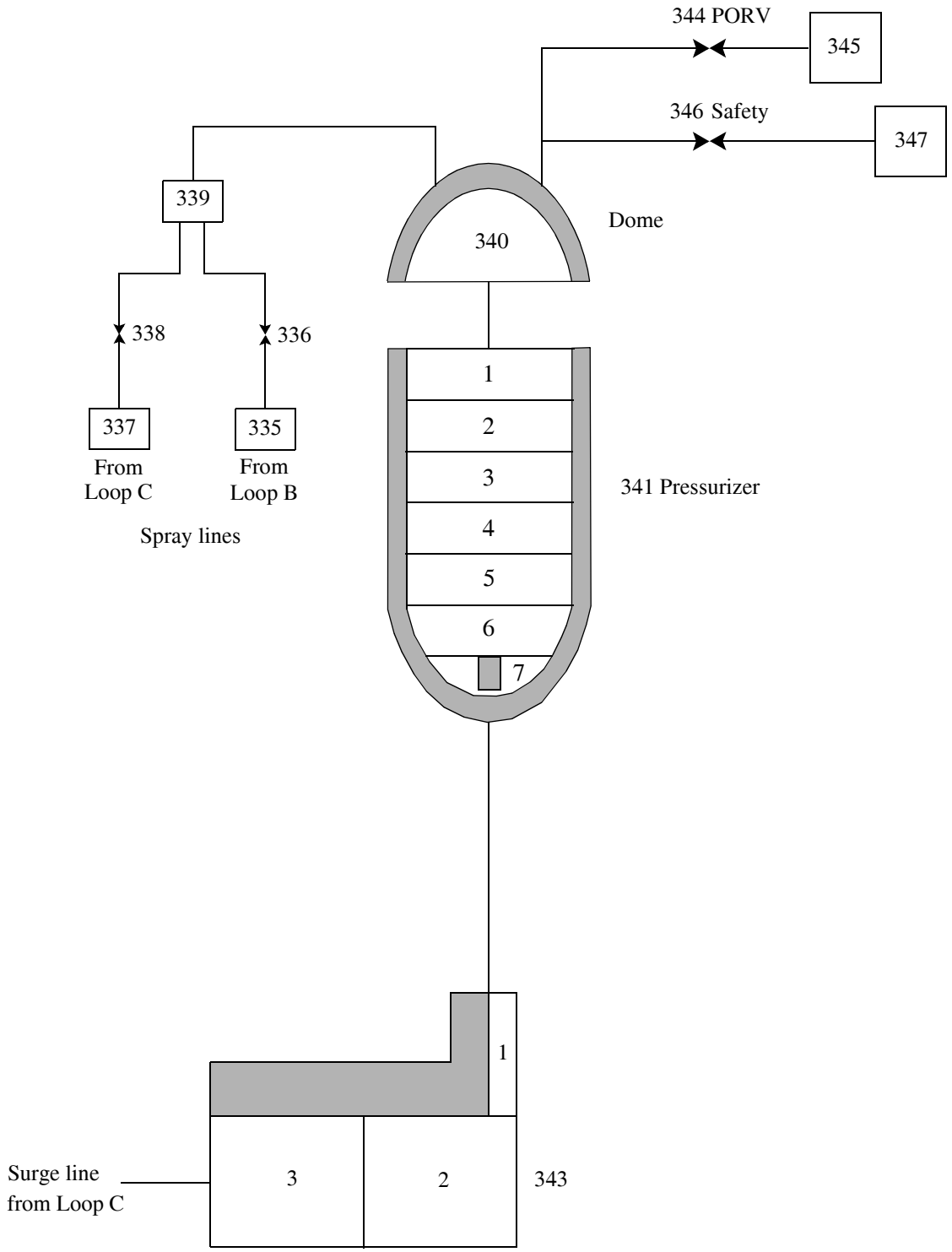

Figure 5.1-4 Nodalization of pressurizer.

In the example PWR model, the pump speed is controlled as follows. First, to obtain a satisfactory steady-state condition, the pump speed may be varied as needed (via a control variable) to attain the desired loop flow rate. Next, once the proper steady condition has been calculated, the pump speed is held constant until a reactor coolant pump trip is implemented (such as by operator action). When the pump is tripped, its speed coasts down as determined by the pump inertia, the hydrodynamic loads, and the pump-bearing friction.

5.1.6 Balance-of-Plant Systems

The model includes feedwater and steam balance-of-plant systems. Section 5.1.6.1 and Section 5.1.6.2, respectively, describe modeling of these systems. **Figure 5.1-5** shows a nodalization diagram of the feedwater and steam systems.

In the example model, the feedwater system extends from the condenser hotwell to the steam generator feedwater inlet nozzles. The decision to include or exclude the feedwater system from a model of a Westinghouse plant should be made based on the transient calculations that are planned. Since feedwater is normally tripped immediately following a reactor trip, many transients may be simulated adequately simply by specifying the feedwater temperature and flow at the steam generator using a time-dependent junction/time-dependent volume pair. However, for transients involving extended feedwater injection following reactor trip (e.g., steam generator overfeed events), a more complete feedwater system modeling may be needed. In addition to retaining model generality, upgraded feedwater system modeling provides more representative simulations of feedwater temperature and flow rate at the steam generator inlets than could be provided with a simple model.

In the example model, the steam system extends from the steam generator outlet nozzles to the turbine stop and steam dump valves. Theoretically, the steam and feedwater systems may be joined into a closed loop by simulating the turbine stages and extraction paths (the turbine component is described in Section 4.6.6.4). In practice, however, the steam system model usually is truncated as shown in **Figure 5.1-5** to avoid the modeling complexities of closing the loop. This simplification is warranted because the initiation of most transients includes rapid closure of the turbine stop, turbine control, or main steam isolation valves. Therefore, complete modeling of the steam system is typically an expensive model luxury.

5.1.6.1 Feedwater System. The standard INEEL feedwater system nodalization is shown in **Figure 5.1-5**. This nodalization has proven satisfactory for simulating the pressure and thermal gradients within the feedwater system during normal operation and during accident conditions. Sufficient model detail is included to properly simulate the distribution of fluid temperatures and pressures within the system. Generally, feedwater system conditions are expected to be single-phase liquid. However, correctly simulating the fluid temperature and pressure distributions can be important for predicting fluid flashing behavior during accidents involving depressurization of the steam generator secondary system.

Time-dependent volume 822 represents the condenser hotwell; fluid conditions here include low temperature water at a vacuum pressure. The condensate pumps draw fluid from the hotwell (component

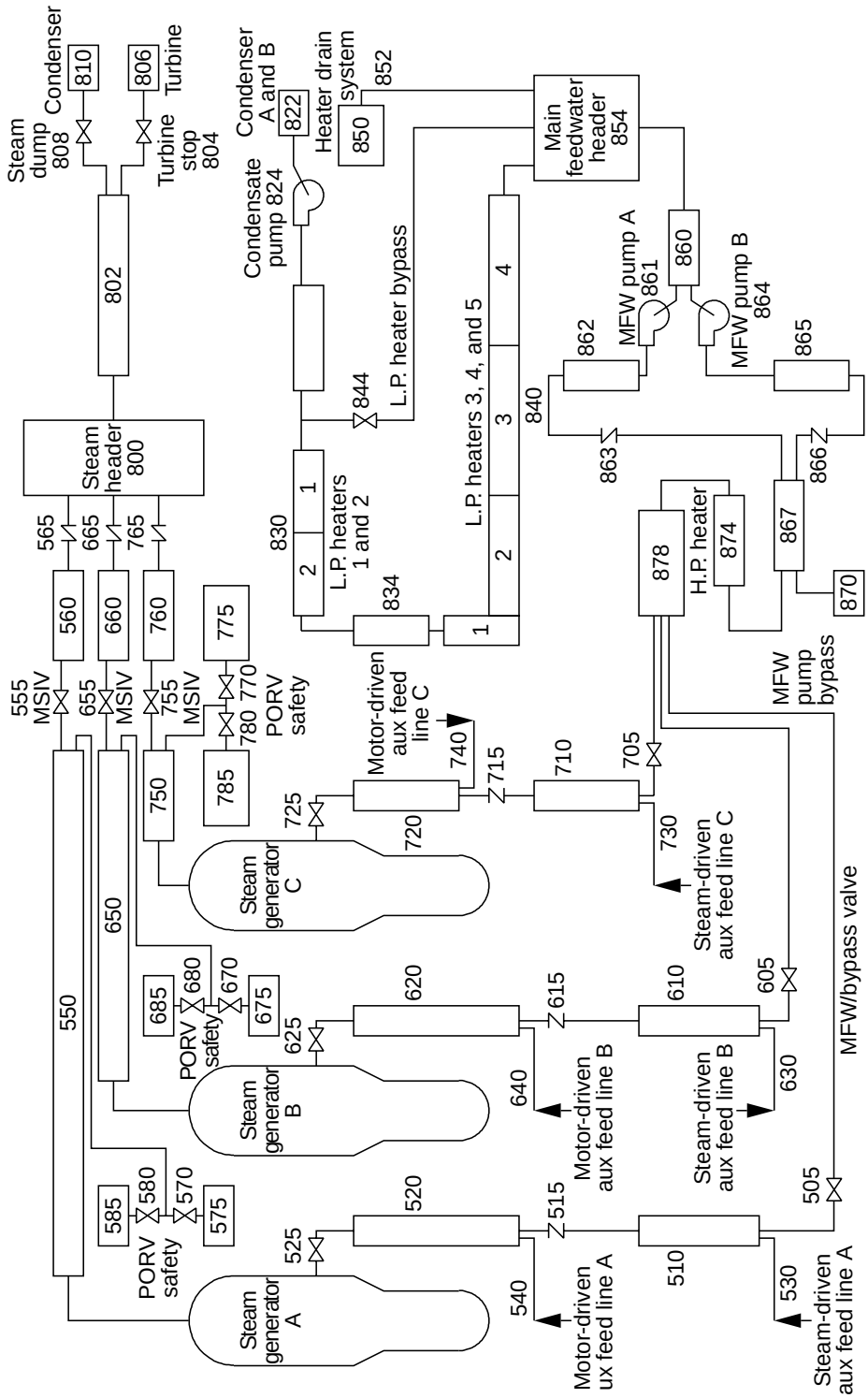

Figure 5.1-5 Nodalization of feedwater and steam systems.

824 lumps the two condensate pumps together). Section 4.6.8 provides a complete discussion of pump modeling. The pump discharges through a set of five low pressure heaters, modeled with components 830 and 840; a bypass line around the low pressure heaters is also modeled. Pipe components with heat structures representing the heater tubes model the heaters. Heat sources (simulating the heating from turbine extraction steam) are modeled within the tube materials. Note that the heat source is interrupted during transient events as a result of steam flow interruption; this effect is included in the model. Since stored energy in the piping may be an important consideration for feedwater temperature during transients, the model includes heat structures representing the feedwater system piping walls.

Downstream from the low pressure heaters, the main feedwater flow is combined in component 854 with flow through the bypass (if open), and with the heater drain flow (if available). The heater drain flow results from steam condensation within the heaters. When the steam flow is interrupted during transient events, the heater drain flow ceases.

Both main feedwater pumps were represented in the model since it was desired to simulate transients when only one of the pumps was tripped. To model the check valves at the outlets of the main feedwater pumps, it was necessary to include single-volumes 862 and 865 in the model. The pump model includes its own inlet and outlet junctions so it is not possible to include a check valve directly within the pump component. A main feedwater pump recirculation line is included in the model for use during periods when the main feedwater valves are completely closed.

Discharges from the two main feedwater pumps are combined before flowing through the high pressure heater (component 874). Modeling for the high pressure heater is comparable to that described above for the low-pressure heaters. Valves 505, 605, and 705 represent the main feedwater valves (Section 5.1.7.2 describes control of these valves). Components 510, 520, 610, 620, 710, and 720 model the main feedwater lines to the individual steam generators. Flow from the steam- and motor-driven auxiliary feedwater systems is modeled with time-dependent junction components.

5.1.6.2 Steam System. The standard INEEL steam line nodalization is shown in **Figure 5.1-5**. The nodalization includes very long cells representing the steam lines between the steam generators and the turbine. This noding has proven adequate for simulating all transients for which these regions remain steam-filled. This noding has also proven adequate for simulating main steam line break accidents, in which liquid is flashed to steam within the steam generator secondary system and the vapor production sweeps liquid out the break. For this simulation, the uncertainty regarding separator performance far exceeds that involved in two phase mixture flow in long pipe volumes. The user should consider finer noding if simulation of liquid ingress is needed (such as during an extreme steam generator overfill transient).

Single-volumes 550, 560, 650, 660, 750, and 760 (see **Figure 5.1-5**) represent the steam lines leading from the individual steam generators to the steam header, branch 800. The junctions between the steam generator domes and the steam lines use reduced flow areas and added flow losses to represent the steam flow restrictors at that location.

Valves 555, 655, and 755 represent the main steam line isolation valves. These are modeled using motor valve components that allow specification of a closure rate. Valves 565, 665, and 765 represent the steam line check valves that prevent flow from one steam generator from exiting a break in another steam generator.

Time-dependent volume 806 sets the boundary conditions representing the inlet of the turbine, and servo valve 804 represents a combination of the turbine stop and turbine governor valves. Prior to reactor trip, this valve modulates to control the turbine inlet pressure. Following reactor trip, the valve closes, simulating a turbine trip. The steam generator pressure boundary condition is set by the combination of (a) the time-dependent volume pressure and (b) the total flow pressure loss from the steam generator to the time-dependent volume at the normal steam flow rate. Section 5.1.3 discusses difficulties in obtaining the proper steam generator heat removal rate at the proper steam pressure. Assuming those difficulties are circumvented as discussed, the desired steam generator pressure is attained by adjusting the loss coefficient at the turbine stop/governor valve to compensate for incomplete turbine modeling.

Servo valve 808 models the steam dump (or turbine bypass) valve (Section 5.1.7.1 discusses control of this valve). Servo valves 570, 670, and 770 model the banks of safety relief valves. For each steam generator, the multiple safety valves are simulated with a single valve component that opens in steps, depending on the steam pressure and its history. The total valve flow area is sized by summing the individual valve areas needed to match the rated capacity at the rated pressure for each valve in the bank. A control variable calculation is then performed to determine the status (open or closed) of each valve. Example 2 in Section 4.4.2 provides guidance for the logic required. The binary valve statuses are multiplied by the respective normalized flow areas of the individual valves. These are summed into a control variable that represents the total valve normalized flow area (0 is fully closed and 1 is fully opened) that specifies the valve model flow area. This technique eliminates the need to model a valve and time-dependent volume component for each valve in the bank, and retains the true valve bank response characteristics. Modeling for the PORVs (components 580, 680, and 780) is comparable to that for the safety valves.

5.1.7 Plant Control Systems

This section discusses modeling of the more significant plant control systems. The steam dump, steam generator level, pressurizer pressure, and pressurizer level control systems are described.

5.1.7.1 Steam Dump Control. The purposes of the steam dump control system are (a) to permit the plant to accept sudden losses of load without tripping the reactor, (b) to remove core stored energy and residual heat following a reactor trip and bring the plant to equilibrium no-load conditions without actuation of the steam generator safety valves, and (c) to control the steam generator pressure at no-load conditions, allowing a transition to manual control. Three corresponding modes of steam dump control serve these purposes. The first two modes (load rejection and plant trip) control the valves based on the primary coolant system average temperature, whereas the third mode (steam pressure) controls the valves based on the steam generator pressure.

The load rejection controller modulates the steam dump valves (if the load rejection is greater than 70%, the steam line PORVs are also modulated) to control the primary system temperature. First, the turbine inlet pressure is linearly converted into a average primary system temperature setpoint. The filtered derivative of the pressure is used to determine its magnitude and whether or not a load rejection has occurred. If a load rejection has occurred, the controller then compares the average primary system temperature with the setpoint value and modulates the steam dump valves. **Figure 5.1-6** shows a block diagram of this portion of the controller. Modulation of the steam dump valves is blocked if the condenser does not have sufficient vacuum, or if the primary average temperature decreases below the minimum temperature setpoint. **Figure 5.1-7** shows valve position as a function of the temperature error. The input required to model the load rejection controller appears in control variables 800 through 815 (control variable input appears at the end of the input listing in Appendix B).

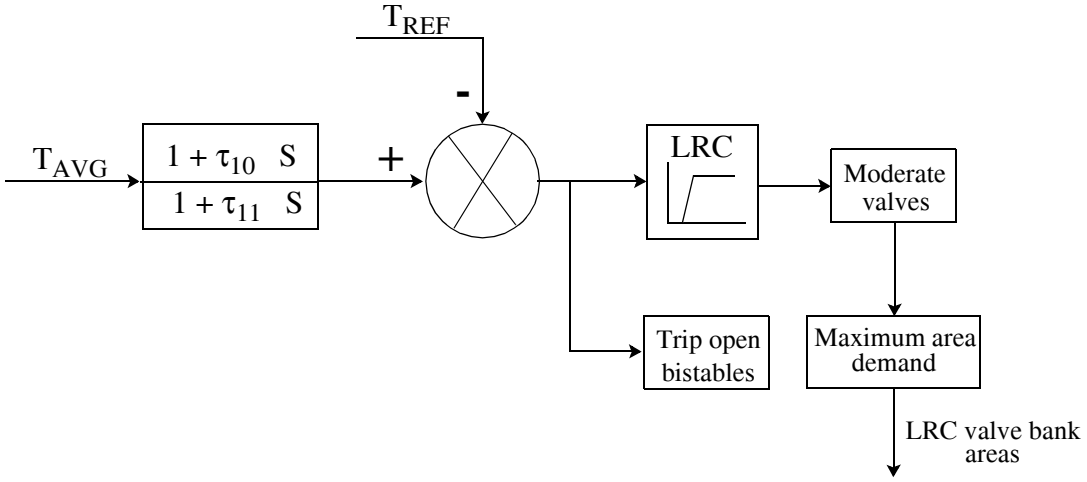

Figure 5.1-6 Block diagram of load rejection controller.

The plant trip controller modulates the steam dump valves to control the primary system temperature at the equilibrium, no-load setpoint immediately following a turbine trip. Modulation of the steam dump valves is blocked if the condenser does not have sufficient vacuum or if the average primary temperature is below its setpoint value. With the exception that the steam line PORVs are not modulated, the logic for this controller is similar to that for the load rejection controller. The input required to model the plant trip controller appears in control variables 820 through 823.

The steam pressure controller regulates the steam dump valves during hot standby operation and after the plant has been brought to its no-load setpoint temperature following a turbine trip. A proportional-integral signal that operates on the error between the current and setpoint steam pressures controls the dump valve flow area. The input required to model the steam pressure controller appears in control variables 825 through 831.

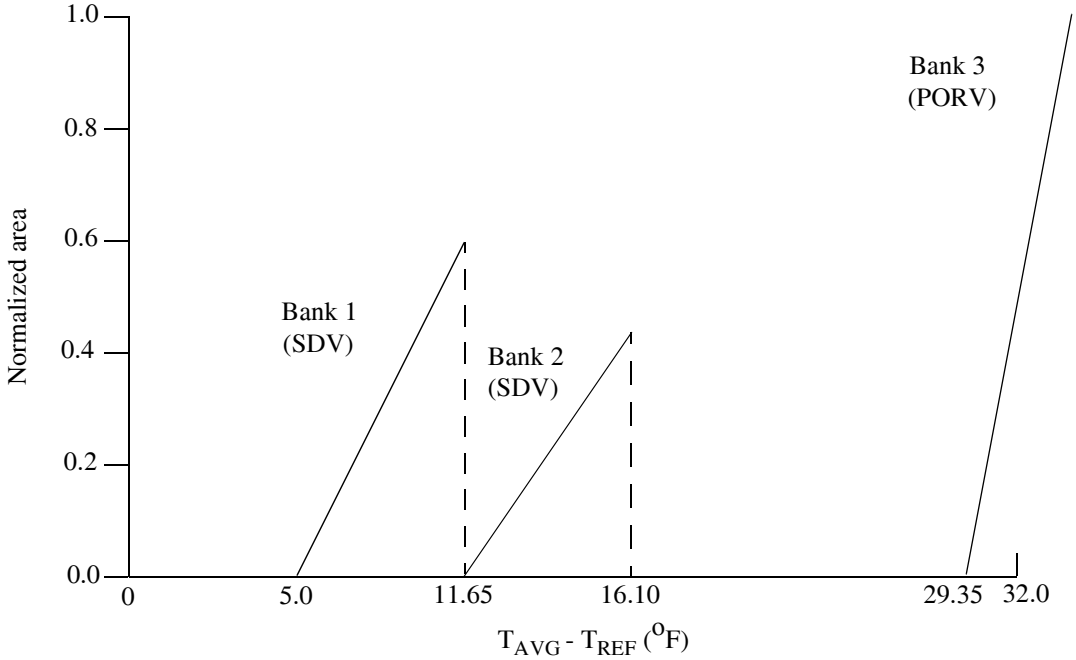

Figure 5.1-7 Load rejection controller valve response.

5.1.7.2 Steam Generator Level Control. The steam generator level control system regulates the steam generator downcomer liquid level by controlling the main feedwater valve based on three elements: current steam generator level, feedwater flow, and steam flow. **Figure 5.1-8** shows a block diagram of the steam generator level control system. The controller first compares the current steam generator level against a current setpoint level that is a function of the current plant load (the load is inferred from the turbine impulse stage pressure). The resulting error signal is summed with the mismatch between the current feedwater and steam flow rates and that output is used to control the position of the main feedwater valve. Each steam generator employs a separate control system; the following discussion uses the level control system for steam generator A as an example.

The first step calculates the steam generator level signal. In the plant, this is accomplished by sensing the pressure difference between two taps in the steam generator secondary, and converting to a level using a reference density. In the model, the level is calculated similarly by control variables 500 through 508. The pressures at the tap locations are determined by interpolating between the two pressures at the cell centers that envelope the actual elevation of the pressure tap. The calculated level is then smoothed in a manner similar to the plant instrumentation system. Control variable 510 calculates the setpoint level, and control variable 511 calculates the level error. The error signal is then processed by a proportional-integral operator (control variable 512) and the output is summed with the feedwater/steam mass flow rate mismatch in control variable 513. The proportional-integral operator in control variable 514 calculates the feedwater valve demand signal. At this point, a series of main feedwater valve permissive tests are applied (failure of any test causes the main feedwater valve to close, regardless of the normal level control

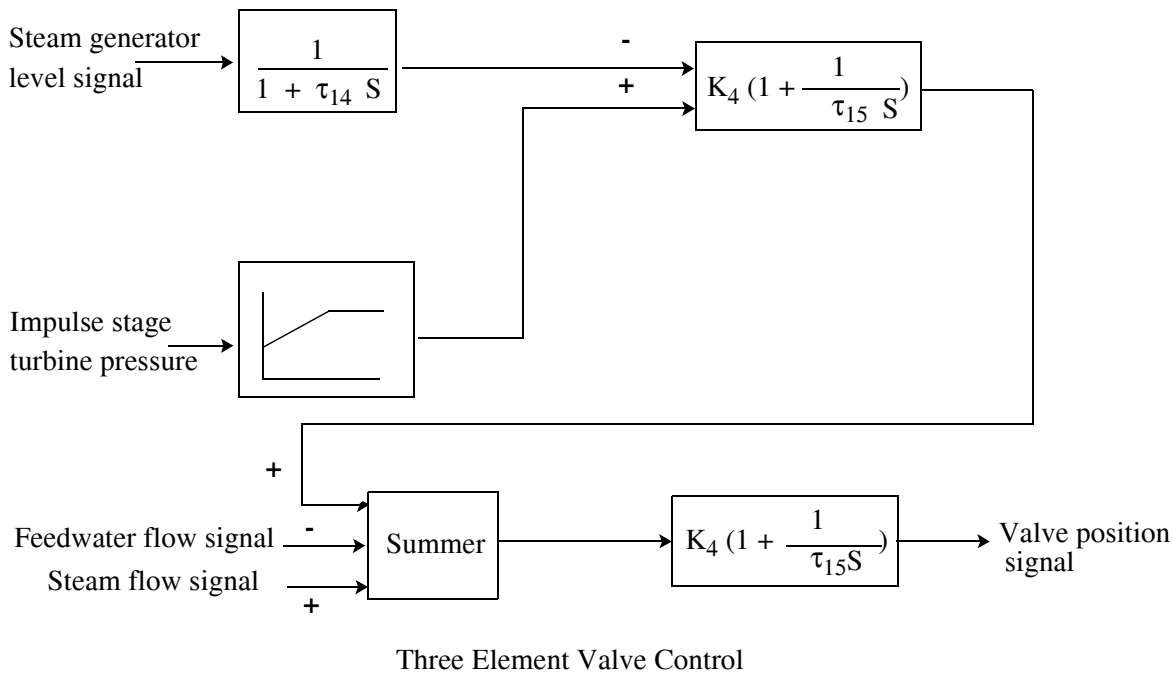

Figure 5.1-8 Functional block diagram of the steam generator level control system.

functions). These tests include (a) reactor trip and low average coolant temperature, (b) high steam generator level, (c) safety injection actuation signal, and (d) main feedwater pump trip. After the tests have been applied, control variable 523 calculates the change in the valve flow area. Control variable 524 calculates the new feedwater valve area by summing the old area (i.e., that on the last time step) with the calculated area change. For simplicity, the valve area is normalized (1 is fully closed and 1 is fully open); this allows control variable 524 to be used directly by the RELAP5-3D© servo valve component that simulates the main feedwater valve.

5.1.7.3 Pressurizer Pressure Control. The pressurizer pressure control system maintains the desired primary system pressure by regulating the pressurizer spray valves, relief valves, proportional heaters, and back-up heaters. The pressure error is determined by comparing the current pressurizer pressure with the setpoint pressure. The error signal is input to a proportional-integral operator whose output controls the functions of the heaters and the spray and relief valves. **Figure 5.1-9** shows a block diagram of the pressurizer pressure control system logic. The input required to model this controller appears in control variables 210 through 226.

5.1.7.4 Pressurizer Level Control. The pressurizer level control system maintains the desired liquid inventory in the pressurizer. The pressurizer setpoint level is specified as a function of the primary coolant system average temperature. The level error is determined by subtracting the setpoint level from the measured level (as determined by the difference in pressure between two taps and a reference density). The pressures at the tap locations are determined by interpolating between the two calculated pressures at the cell centers that envelope the actual elevation of the pressure taps. The calculated level is then smoothed in a manner similar to the plant instrumentation system. The level error signal is input to a proportional-integral operator whose output specifies the change in the charging pump speed (and thereby

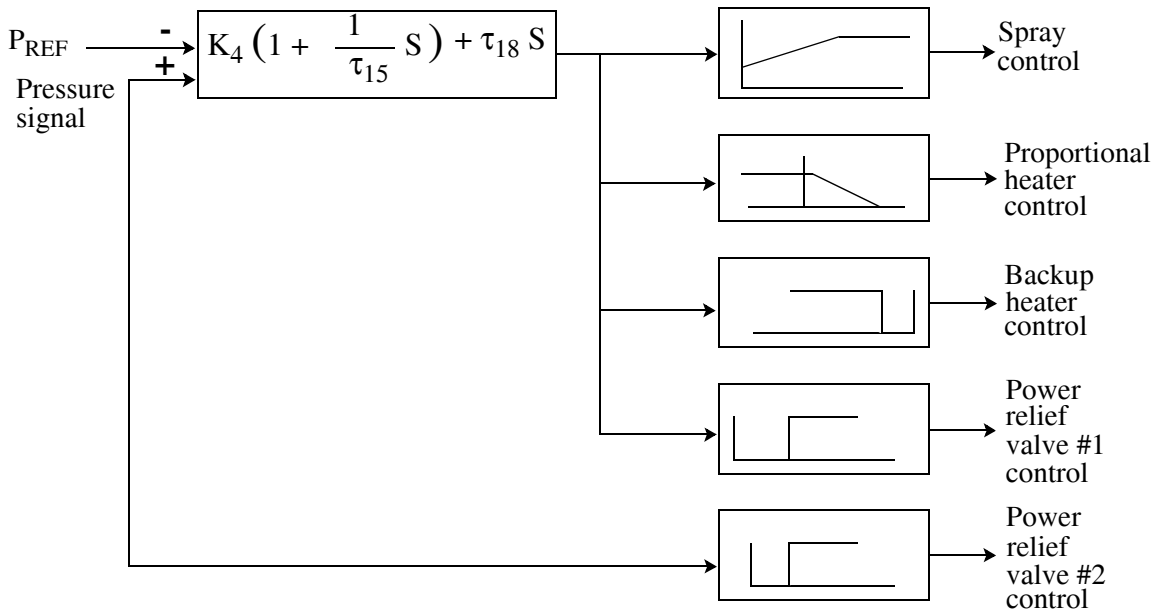

Figure 5.1-9 Block diagram of pressurizer pressure control system.

the fluid addition rate to the primary coolant system). The input required to model this controller appears in control variables 200 through 206.

5.1.8 Modeling a Large Break Loss-of-Coolant Accident

Although LBLOCAs have been modeled at the INEEL in the past using earlier versions of RELAP5,[5.1-1,5.1-2] LBLOCA analyses had not been performed at the INEEL until recently because RELAP5/MOD2 and RELAP5/MOD3 were declared SBLOCA/operational transient analysis codes by the USNRC. LBLOCA analyses have been performed by users at other locations, however, and recently have been performed at the INEEL.

The following summary first shows RELAP5/MOD2 analyses from users at other institutions. Since major differences exist between the RELAP5/MOD2 and RELAP5/MOD3 heat transfer packages and interphase drag models, the following information is of limited usefulness. As more up-to-date information becomes available, these guidelines will be updated.

To the authors' knowledge, no studies exist that relate assessment analyses performed on scaled facilities to commercial plants for RELAP5-3D© . Consequently, the following are guidelines specific to scaled facilities such as LOFT or Semiscale and should be regarded as a starting point for a commercial plant analysis.

Some of the most extensive LBLOCA work has been done at the Institute of Nuclear Energy Research in Taiwan,[5.1-3,5.1-4] the Korea Atomic Energy Research Institute,[5.1-5] and the Paul Scherrer Institute (PSI) in Switzerland.[5.1-6,5.1-7] Work by Lubbesmeyer is of particular interest because major simplifications to the fundamental LOFT model used by most of the other researchers were studied. Lubbesmeyer's work is based on the LOFT LP-LB-1 and LP-02-6 experimental data.

Lubbesmeyer's studies focused on the code's capability to simulate LBLOCA related thermal-hydraulic phenomena for various nodalizations. Lubbesmeyer began with a rather detailed nodalization (**Figure 5.1-10**) and then performed the same analysis using simpler nodalizations (**Figure 5.1-11**). The core nodalization was unchanged throughout the studies (**Figure 5.1-12**) and the vessel nodalization was only slightly modified.

The initial, detailed nodalization is shown in **Figure 5.1-10**. This model contains 18 components in the reactor vessel, including 2 components each to model the intact and broken sides of the downcomer and 3 components to model the core region. Note that the LOFT vessel downcomer was modeled by dividing the downcomer into two non-interacting equally-sized annuluses that connect with the broken and intact loops even though the LOFT facility simulates the presence of three plant loops with its intact loop. The core fuel region was modeled with the average power core zone, containing 5 cells and sized to include 79% of the total mass flow, whereas the high power zone was sized to include 16% of the total flow and contained 13 cells. Lubbesmeyer did not use any crossflow junctions in the core because preliminary calculations using the crossflow junctions had shown the quantity of mass exchange in the traverse direction to be negligible.

The remainder of the more detailed nodalization contained 20 components in the intact loop with a total of 24 cells (not including the ECCS), 3 components in the primary side of the steam generator (SG) (the tubes were modeled using 8 cells in component 515), 15 components in the secondary side of the SG, 4 components in the pressurizer and surge line (including 6 cells in component 415 to model the main pressurizer tank and 3 cells in the surge line), and 15 components to model the broken loop including 21 cells in the broken loop piping.

To explore the effect on the code's capability to calculate the important thermal-hydraulic phenomena present in an LBLOCA, Lubbesmeyer simplified the model nodalization in two steps. First, the detailed model was simplified by decreasing the number of components in the loops, the SG, and the pressurizer. The vessel and core nodalizations were not changed. The intact loop was modeled with 7 components with a total of 21 cells, the SG primary side was modeled with only 1 component (6 cells), the SG secondary side was modeled with 3 components, the pressurizer and surge line were modeled with 2 components (5 cells), and the broken loops were modeled with only 6 components, with a total of 15 cells in the broken loop pipes.

Lubbesmeyer's most simplified nodalization is shown in **Figure 5.1-11** and differs from the previous simplification by having the same number of components in the intact loop, SG, and broken loop, but fewer cells. The number of cells in the intact loop was decreased to 10, the SG primary side was

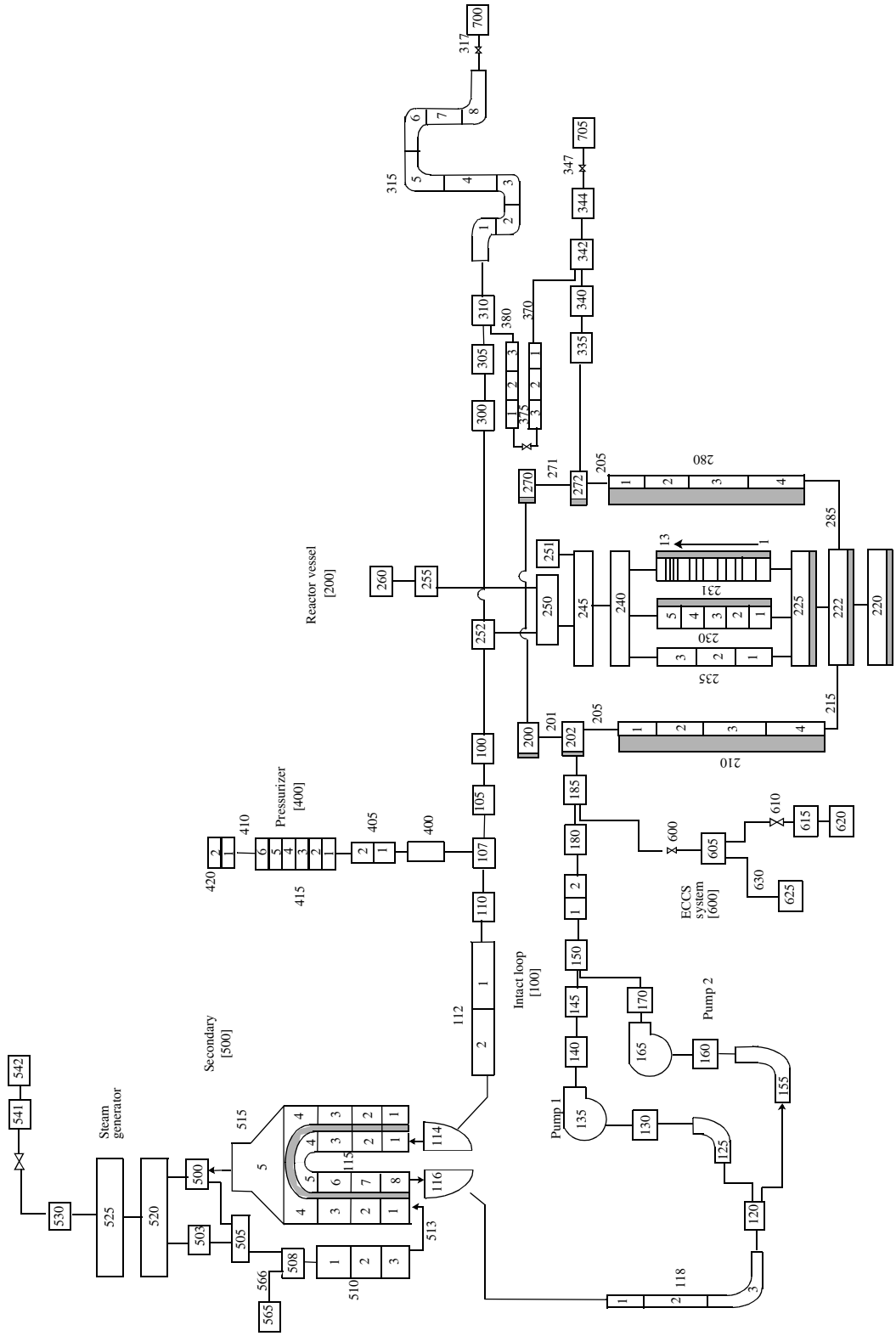

Figure 5.1-10 Detailed Loss-of-Fluid Test nodalization for large break loss-of-coolant accident analysis.

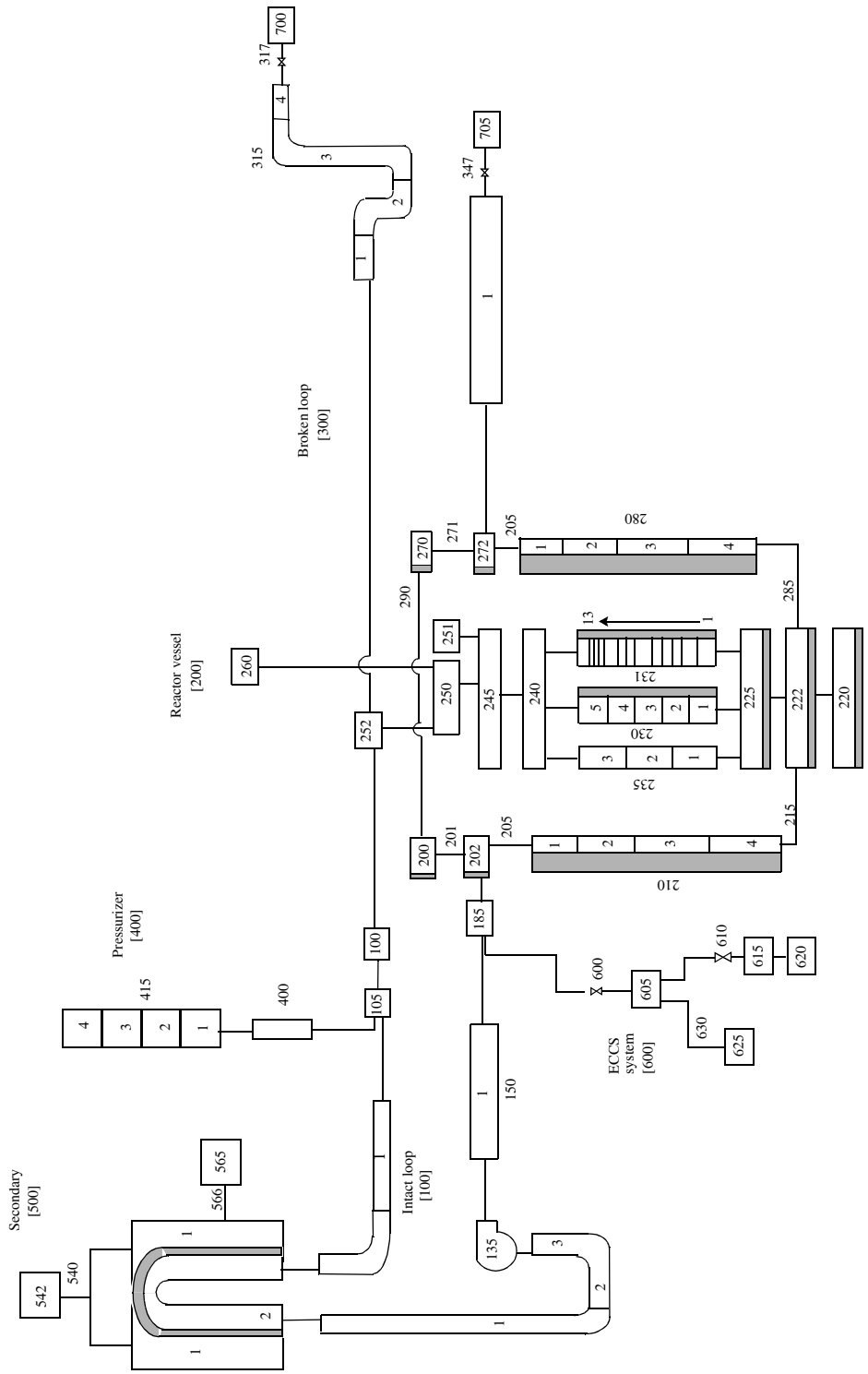

Figure 5.1-11 Simplified nodalization of the Loss-of-Fluid Test system for large break loss-of-coolant accident analysis.

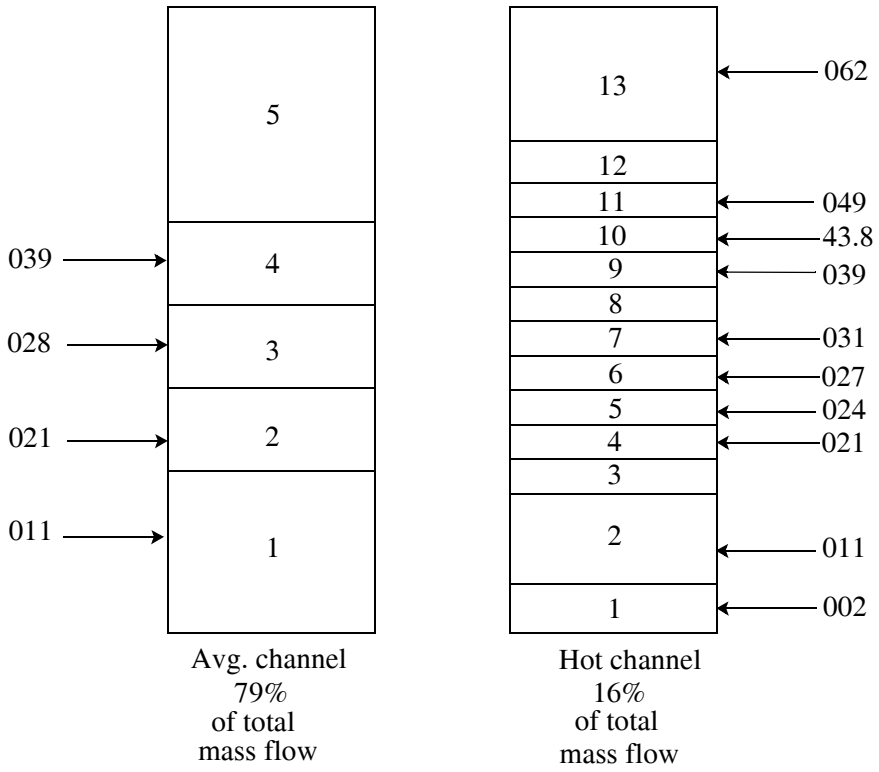

Figure 5.1-12 Detail of the nodalization of the Loss-of-Fluid Test core (average and hot channels).

represented with only 2 cells, the SG secondary side was represented with 3 cells, and the broken loop piping was modeled with only 5 cells.

Lubbesmeyer's conclusions[5.1-6,5.1-7] concerning LBLOCA specific nodalizations are summarized below. (Note: Portions of the conclusions that compare the calculations to the LOFT data have been removed in the editing process.):

- With respect to the computation time, the degree of specification of the nodalization (i.e., the numbers of volumes and junctions) is an important parameter. But a lower number of junctions and volumes has not always led to a faster calculation. Sometimes, with respect to computing time and because of numerical instabilities, the profit of a much reduced nodalization is rather small.

- For LBLOCAs, the nodalization seems to be important only for the cladding temperatures, where significant differences can be observed for the different nodalizations under investigation.

- For the other parameters, the deviations between the results of the calculations with the different nodalizations under investigation have error bounds of less than ±20%;

surprisingly, however, the results of runs with less detailed nodalizations usually seem to be closer to the experimental data than the ones with the more detailed basic nodalization scheme.

Work has been done by other researchers to investigate the effect of crossflow junctions in the core and downcomer. Perhaps the earliest report recommending crossflow junctions was summarized by Adams[5.1-1] based on assessment work done using RELAP5/MOD1. Adams recommended that the downcomer be nodalized as two components with crossflow. He recommended that the downcomer be split one-third and two-thirds, with the larger part associated with the broken loop. Other researchers[5.1-5,5.1-3] have used baseline models that included crossflow capability in the vessel downcomer and/or in the core. Kao modeled crossflow in both locations but did not evaluate the effectiveness of such nodalization. Bang began his analysis with a simplified core (i.e., the core was modeled with a PIPE component containing 12 cells, and a downcomer was modeled using two parallel paths with crossflow junctions). This model showed unrealistic downcomer bypass behavior and poor correspondence between the calculated core temperatures and the data. Bang's nodalization studies included an investigation of the effect of removing the crossflow junction couplings in the downcomer below the cold leg elevation and a two-component core section that represented the average and hot portions of the core (the core components were not connected using crossflow junctions). His final recommendations were (a) that the vessel downcomer should not have crossflow junctions for the geometry below the cold leg elevations, and (b) representing the average and hot portions of the core is important in better simulating the core temperature distributions because LBLOCA transient behavior is not uniform.

In summary of earlier work, since Bang's work is supportive of Lubbesmeyer's approach and since Adams' work was done using an early version of RELAP5-3D©, it appears that the best starting point for an LBLOCA analysis is to (a) use a two-component representation for the core if simulation of the high-powered fuel rod behavior is important in meeting the analysis objectives, (b) do not model crossflow in the downcomer, and (c) in general, use a simplified system nodalization if possible.

Recently at the INEEL, Davis[5.1-8] assessed RELAP5-3D© using the multi-dimensional hydrodynamics component using data from the LOFT LBLOCA Test L2-5. Test L2-5 simulated a 200% double-ended cold leg break with an immediate primary coolant pump trip.

A three-dimensional input model of the LOFT reactor vessel was developed during this analysis. The vessel was modeled with four radial rings and four azimuthal sectors. The three-dimensional model was derived from a one-dimensional model that was used during the developmental assessment of RELAP5/MOD3.

Calculations of the LOFT L2-5 experiment were performed with both the one-dimensional and three-dimensional input models using RELAP5-3D©. The calculated hydraulic responses of the LOFT primary and secondary coolant systems were generally in reasonable agreement with the test data. The calculated results were also generally as good as or better than those obtained with RELAP5/MOD3.

The calculated thermal response of the core fuel rods with the three-dimensional input model was generally similar to that observed in the test. The calculated peak cladding temperature was 990 K while the measured peak cladding temperature was 1,078 K. The most significant deviations between the calculated and measured thermal responses were that the calculated peak cladding temperature occurred earlier than in the test and that the top-down rewet that was observed near 15 s in the test was not predicted. In both cases, similar results were obtained with the one-dimensional input model, indicating that the deviations were not caused by the code's three-dimensional hydrodynamic model.

5.1.9 References

5.1-1. J. P. Adams, D. L. Batt, and V. T. Berta, "Influence of LOFT PWR Transient Simulations on Thermal-Hydraulic Aspects of Commercial PWR Safety," *Nuclear Safety*, *27,* 2, April-June 1986, pp. 179-192.

5.1-2. P. N. Demmie, T. H. Chen, and S. R. Behling, *Best Estimate Prediction for LOFT Nuclear Experiment L2-5*, EGG-LOFT-5869, Idaho National Engineering Laboratory, May 1982.

5.1-3. L. Kao et al., *Assessment of RELAP5/MOD2 Using LOCE Large Break Loss-of-Coolant Experiment L2-5*, Institute of Nuclear Energy Research, September 1988.

5.1-4. K. S. Liang et al., *Assessment of RELAP5/MOD2 Using Semiscale Large Break Loss-of-Coolant Experiment S-06-3*, Institute of Nuclear Energy Research, September 1988.

5.1-5. Y. S. Bang, S. Y. Lee, and H. J. Kim, *Assessment of RELAP5/MOD2 Cycle 36.04 Using LOFT Large Break Experiment L2-5*, Korea Atomic Energy Research Institute, 1991.

5.1-6. D. Lubbesmeyer, *Post-Test Analysis and Nodalization Studies of OECD LOFT Experiment LP-LB-1 with RELAP5/MOD2 cy36-02*, PSI-Bericht Nr. 91, Paul Scherrer Institute, March 1991.

5.1-7. D. Lubbesmeyer, *Post-Test Analysis and Nodalization Studies of OECD LOFT Experiment LP-02-6 with RELAP5/MOD2 cy36-02*, PSI-Bericht Nr. 92, Paul Scherrer Institute, March 1991.

5.1-8. C. B. Davis, *Assessment of the RELAP5 Multi-Dimensional Component Model Using Data From LOFT Test L2-5*, INEEL-EXT-97-01325, Idaho National Engineering and Environmental Laboratory, January 1998.

5.2 Unique Features of Babcock & Wilcox Plants

Several design features of Babcock & Wilcox (B&W) plants present special modeling problems. These features and examples of recommended modeling are presented in this section.

5.2.1 Reactor Vessel

Two unique features of the B&W reactor vessel require special modeling consideration: the upper plenum region and reactor vessel vent valves. Except for core noding, **Figure 5.1-10** shows the standard

INEEL nodalization for a B&W reactor vessel (standard noding includes six axial core divisions, not three as shown in the figure).

5.2.1.1 Upper Plenum Region. The upper plenum region is modeled with components 520, 525, 530, 535, 540, and 545 (see **Figure 5.2-1**). The geometry and hence the nodalization needed) for a B&W reactor vessel upper plenum differs markedly from those in Westinghouse and Combustion Engineering, Inc. (CE) plants that were discussed in Section 5.1.1.

In the B&W reactor vessel upper plenum, parallel flow paths exist for core flow to reach the hot legs. Component 520 combines the main core flow with the core bypass flow. The central region of the upper plenum is confined within a vertical cylindrical baffle. This region is modeled with components 525 and 530. Inside the baffle, flow is directed upward until it reaches the support plate that separates the upper plenum and upper heads. At that elevation, a series of large-diameter holes in the baffle allows the coolant to flow radially outward, then downward through an annular region defined by the baffle on the inside and by the core barrel on the outside. This annular region is modeled with components 540 and 545. The hot leg nozzles (modeled with crossflow junctions 100 and 200) are connected to the annular region at component 545.

Small-diameter holes in the cylindrical baffle centered adjacent to the hot leg nozzles allow a portion of the core flow to pass directly from the inside to the outside of the baffle. This flow path is modeled with the junction between components 525 and 545.

Just above the core, a portion of the flow enters the guide tube pipes that lead to the upper head. The pipes are modeled with component 580 while the upper head is represented by component 550.

A leakage path opened by the slip-fit between the reactor vessel and core barrel assemblies at the hot leg nozzle penetrations is modeled with a junction between components 565 (the downcomer annulus) and 545. Modeling of this junction is described further in Section 5.1.1.

In **Figure 5.2-1**, note the accumulators (termed “core flood tanks” in a B&W plant) and the low pressure injection system discharge into the reactor vessel downcomer. In non-B&W reactor designs this system discharges into the cold legs. The reactor vessel internal vent valves are modeled with valve component 536. These valves are described further in the next section.

5.2.1.2 Reactor Vessel Vent Valves. The reactor vessel vent valves are unique to B&W plants. These are large-diameter flapper valves that can open outward to allow flow from the upper plenum to the upper annulus of the downcomer (for their location see component 536 in **Figure 5.2-1**). Some plants use four valves, others eight. The valves are evenly spaced around the circumference of the core barrel. The valves' purpose is to prevent steam binding from depressing the core level, or from retarding reflood during accident conditions.

The valve flapper is hinged at its top and is held closed by a gravity moment. Static valve tests indicate that for differential pressures below 0.1 psi, the valve is closed. As the differential pressure is increased above 0.1 psi, the valve opens linearly until it is fully opened at a differential pressure of 0.25

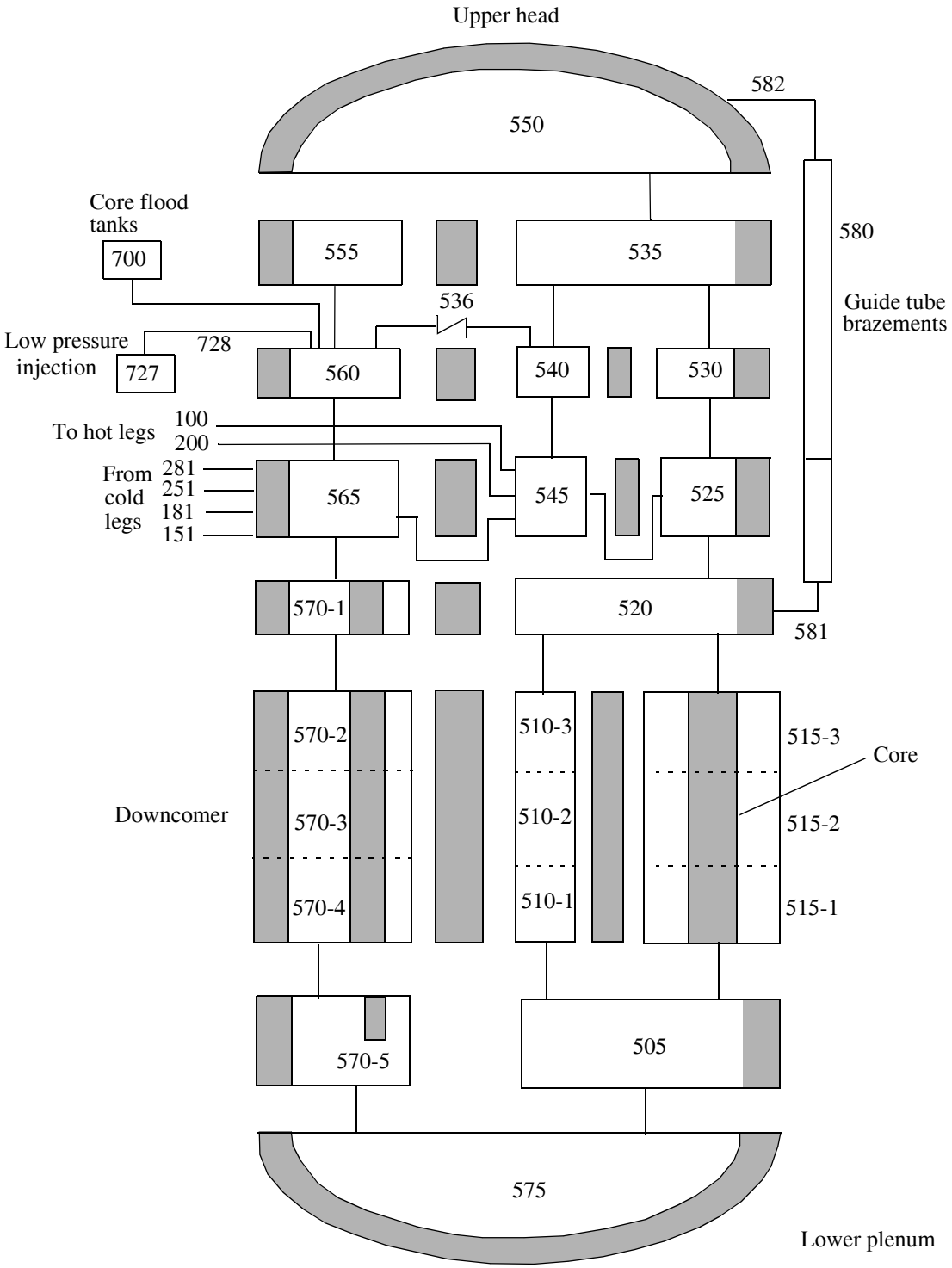

Figure 5.2-1 Example Babcock & Wilcox reactor vessel nodalization.

psi. Because of these valve characteristics, the vent valves are closed during periods when the reactor coolant pumps are operating and the core flow rate is high. If the reactor coolant pumps are tripped, however, the reduced core flow rate results in a reduced core differential pressure. Experience has shown that if the core flow is due to natural circulation through the coolant loops, then the vent valves will be partially open. Note that the vent valve flow path is parallel to the flow paths from the reactor vessel upper plenum, through the coolant loops, and back to the reactor vessel downcomer. Therefore, if the vent valves are open, there is an internal circulation loop within the reactor vessel that is independent of any loop circulation path. This is a unique thermal-hydraulic feature of B&W plants.

As shown in **Figure 5.2-1**, all the vent valves are modeled with a single valve that lumps together the characteristics of the four or eight vent valves. It is recommended that a servo valve component be used; with this valve type, the normalized valve area is specified via a control variable. To determine the valve position, control variables are used to calculate the current differential pressure across the valve and, from the position schedule in the previous paragraph, the current valve normalized area. Because control variables are evaluated on each time step, it is necessary to introduce a time lag to slow the response of the valve model. If a lag is not used, the valve response is virtually immediate and numerical difficulties can be encountered. Such rapid valve "chattering" is not characteristic of the actual valve movement, where the momentum effects of a large metal flapper are significant.

5.2.2 Steam Generator

B&W plants employ once-through steam generators (OTSGs) that differ considerably in design from the U-tube steam generators (UTSGs) employed in CE and Westinghouse plants. The OTSG is a counterflow heat exchanger that employs straight tubes. The standard INEEL OTSG nodalization is shown in **Figure 5.2-2**. Components 116 and 125, represent the OTSG inlet and outlet plena, respectively. Single-sided heat structures represent the significant metal structures (such as the steam generator heads and the tubesheets). Reactor coolant flows downward through the insides of the tubes; 8-cell pipes 120 and 121 represent the tube primaries. Pipe 120 represents 90% of the OTSG tubes, pipe 121 represents the other 10% (the reason for separating the tubes in this manner is discussed below). Two-sided heat structures model the tube walls.

On the secondary side, the downcomer region is modeled with 4-cell pipe 305. Main feedwater enters the downcomer at the upper end of this component. Single-sided heat structures represent the steam generator shell and the vertical baffle that separates the boiler and downcomer regions. Branch 306 represents the region at the lower tubesheet, where the flow changes direction from downward to upward.

The boiler region is separated into two parallel flow paths, representing 90% and 10% of the flow area. The paths are connected by crossflow junctions. Components 310 through 323 represent the 90% region while components 360 through 373 represent the 10% region. The split boiler region model is recommended to simulate phenomena during periods of emergency feedwater injection. This injection enters the boiler around the circumference of the boiler, near the upper tubesheet (junction 854 in the model) and is directed radially inward, into the tube bundle. Because the OTSG employs over 15,000 tubes, the emergency feedwater wets only a small portion of the tubes around the periphery of the tube

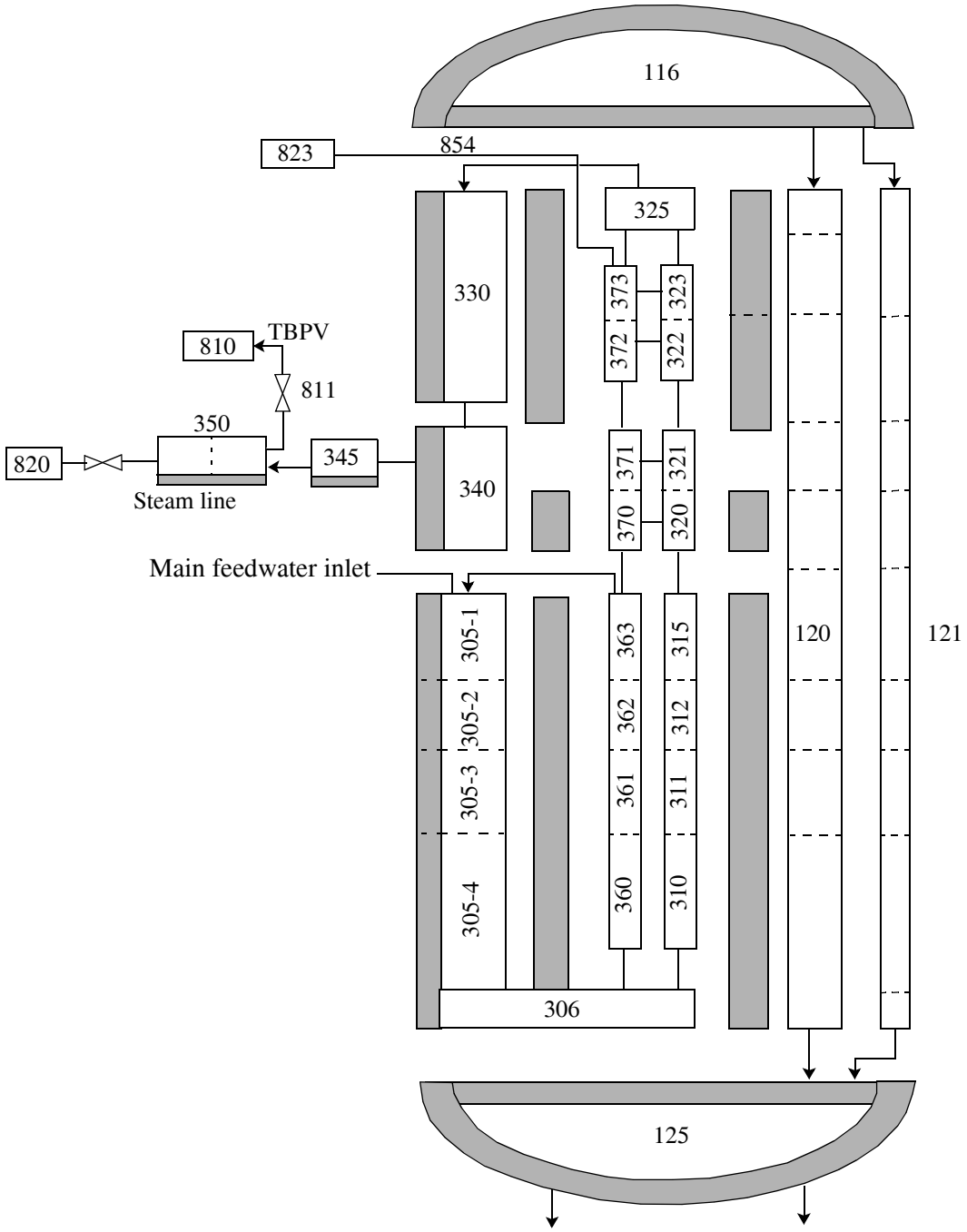

Figure 5.2-2 Example Babcock & Wilcox steam generator nodalization.

bundle. As the emergency feedwater falls downward, it encounters the tube support plates (there are 17 in the OTSG) that tend to spread the injection flow further into the tube bundle. The split boiler nodalization represents a compromise modeling scheme for simulating this behavior. An initial 10% bundle penetration is expected, and the crossflow connections to the 90% region allow simulation of the inward spreading.

At the top of the boiler region, flows from the parallel boiler channels are combined in branch 325 before exiting the steam generator through a steam annulus, modeled with components 330 and 340.

Modeling the behavior of an OTSG is perhaps the most difficult of nuclear thermal-hydraulic system code problems encountered. The difficulty arises for two reasons. First, a complete spectrum of heat transfer phenomena is experienced between the tube wall and the secondary fluid. At the bottom of the tubes, heat transfer is to subcooled liquid. As the flow progresses up the tubes, the liquid is then saturated and boiled away. To preheat the feedwater, a portion of the steam flow is bled into the downcomer through an aspirator near mid-boiler (modeled with the junction between components 363 and 305 in **Figure 5.2-2**). Further up the tubes, any remaining droplets are vaporized and the steam is significantly superheated. Second, the OTSG heat removal rate is very sensitive to the secondary-side liquid level. As the level increases, more of the tube surface area experiences effective heat transfer (e.g., boiling) rather than ineffective heat transfer (e.g., convection to steam). Moreover, the sensitivity of OTSG heat removal to level is present during normal operation, while for UTSGs this is a concern only during accidents that involve an extreme depletion of secondary liquid.

The OTSG steam generator nodalization shown in **Figure 5.2-2** has proven adequate for simulating normal operation. The difficulty in obtaining a satisfactory OTSG simulation described above is partly nodalization dependent. Nodalization is by nature discrete, and this causes the steam generator heat removal in the model to be even more sensitive to the secondary level than in the prototype. In the model, as the level moves across cell boundaries, discrete jumps in overall heat transfer are encountered. These changes often cause the model to become unstable, oscillating between two solutions at two different secondary levels. Moving to finer axial noding may remedy the oscillation, however the proximity of the liquid level to cell boundaries often is more important than cell size.

5.2.3 Hot Leg

The hot leg geometry of B&W plants differs markedly from that of Westinghouse and CE plants. The B&W hot leg includes a tall vertical section, leading to an inverted U-bend. **Figure 5.2-3** shows the standard INEEL nodalization for the hot legs of B&W plants. Heat structures are used to represent the piping walls.

5.2.4 Cold Leg

B&W coolant loop design includes two cold legs per steam generator. Because this design feature is the same as for CE plants, the reader is referred to Section 5.3 for additional modeling information. The standard INEEL nodalization for the cold legs of B&W plants is shown in **Figure 5.2-3**. Heat structures are used to represent the piping walls.

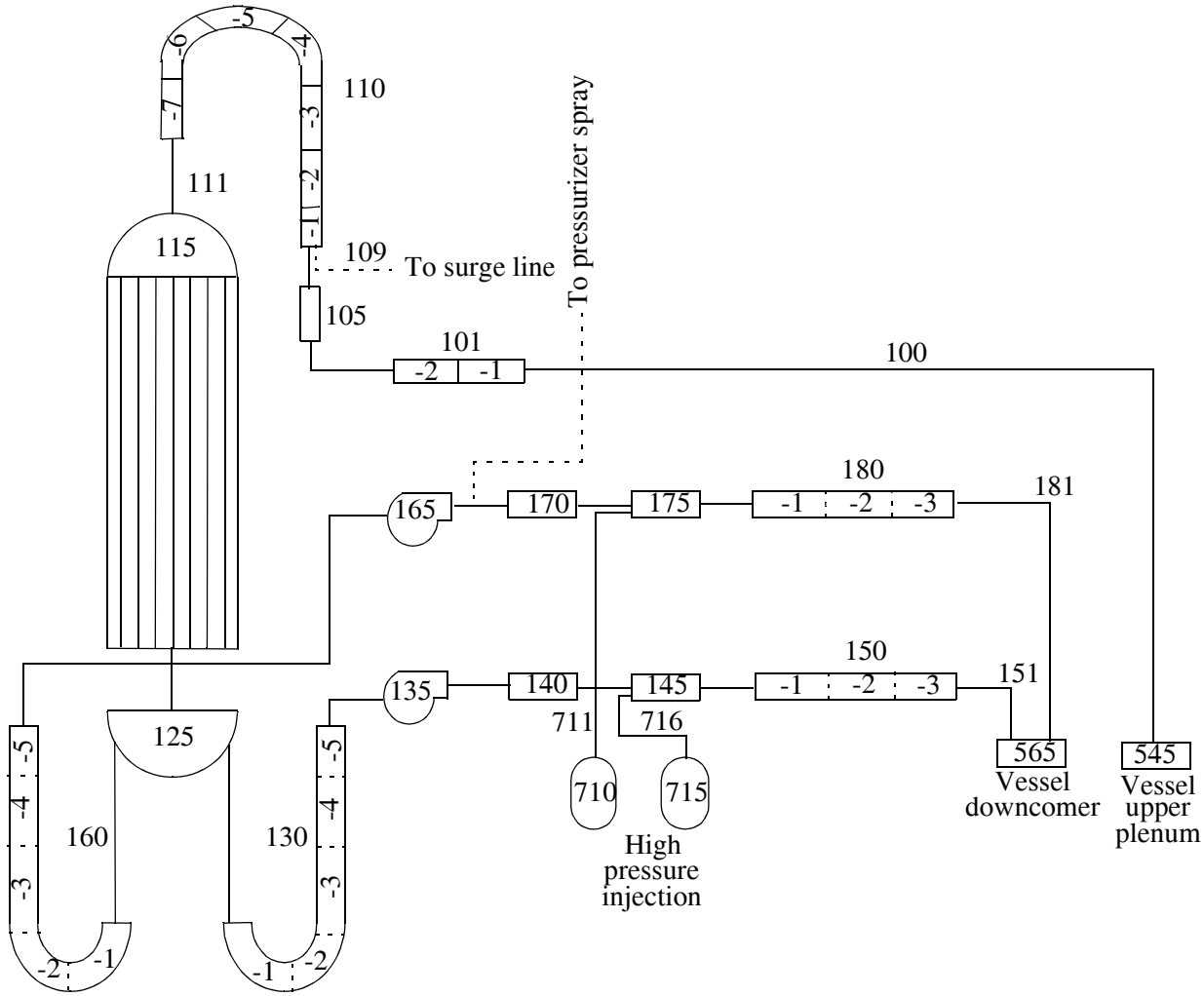

Figure 5.2-3 Example Babcock & Wilcox coolant loop nodalization.

5.2.5 Plant Control Systems

The control systems included for a given analysis are dependent on the transient of interest. Because of the integrated nature of the B&W plant control systems, the investigator may find that many interactions within the control system must be considered. Moreover, the B&W control system is proprietary. Thus, the ultimate decision concerning what portion of the system must be included is dependent on the transient of interest and whether or not B&W will give the investigator the necessary information. Regardless, past experience at the INEL has indicated that the components contained within RELAP5-3D© are adequate to simulate the control system's interactions.

To assist the user in applying the RELAP5-3D© control system components to B&W applications, the following paragraphs outline an application of the RELAP5-3D© control blocks to the Davis-Besse

Plant when a loss of feedwater uncertainty analysis was undertaken.[5.2-1] Many of the plant control systems were represented. These control systems include the integrated control system (ICS), pressurizer pressure control system, anticipatory reactor trip system (ARTS), and steam and feed rupture control system (SFRCS). These control systems are described in greater detail below.

The RELAP5/MOD2 model of the Davis-Besse ICS represents the following subsystems: unit load demand development subsystem, integrated master subsystem, steam generator feedwater control subsystem, and the reactor control subsystem. **Figure 5.2-4** is a schematic of the ICS organization and presents an overview of the ICS functions. The borate control subsystem and the non-nuclear instrumentation system are not represented. The ICS model is based on information obtained from B&W and Davis-Besse personnel, plant calibration data, detailed schematics of the subsystems, analog and digital logic drawings, and Bailey Meter Company detailed descriptions of the individual modules.

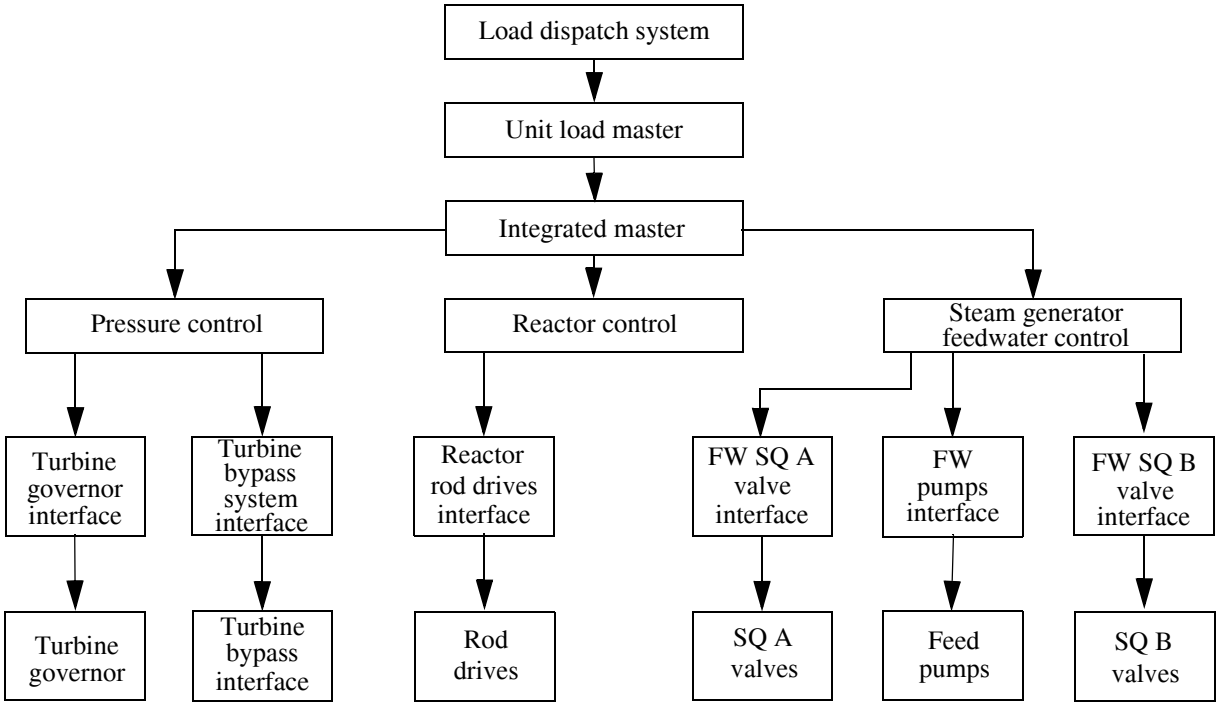

Figure 5.2-4 Babcock & Wilcox integrated control system organization.

The ICS modules and relays were modeled individually to provide the greatest amount of flexibility for future analysis requirements. Additional control variables were included in the model to allow the analyst the ability to impose false signals during a calculation. For example, a steam generator level signal can be failed to zero interactively to simulate a failed level transducer. Display parameters and display options available to the operator are also available to the analyst during interactive execution.

The RELAP5/MOD2 kinetics package is not used in the Davis-Besse model. Consequently, reactor control rod positioning is not directly coupled to the reactor power. Instead, the reactor power is controlled by general table reference. Reactor kinetics can be incorporated at a later date, as the need arises.

The pressurizer pressure control system was modeled through the representation of pressurizer heaters and spray. Design data on the pressurizer level control system were not available during the development of the model. Instead, a simple model was developed that controlled the net makeup into the reactor coolant system based on the pressurizer level. The net makeup represented the combination of makeup and letdown, with the net flow added to the A1 cold leg pump discharge. In the plant, letdown is taken from the B1 cold leg pump suction, but the model approximation is thought to be adequate for most applications. The capability to model zero, one, or two makeup pumps and minimum, normal, or maximum letdown, in any combination, was developed.

The model represents the ARTS and SFRCS. Reactor trip is modeled based on high power, high reactor pressure or temperature, power-to-flow ratio, reactor pressure versus temperature, RCP trip, turbine trip, SFRCS actuation, or manual trip. SFRCS is actuated based on low steam pressure, low feedline differential pressure, low or high OTSG level, or reactor coolant pump trip. The model determines the correct alignment of AFW based on the type of SFRCS actuation. In event of a rupture of the steam or feed lines, SFRCS isolates the OTSGs and aligns AFW into the unaffected OTSG.

5.2.6 Reference

5.2-1. C. B. Davis, *Davis-Besse Uncertainty Study*, NUREG/CR-4946, EGG-2510, Idaho National Engineering Laboratory, August 1987.

5.3 Unique Features of Combustion Engineering, Inc. Plants

CE plants are quite similar to Westinghouse plants. Therefore, the structure of the example plant model discussed in Section 5.1 is generally applicable to CE plants.

From a RELAP5-3D© modeling perspective, there is only one significant difference between Westinghouse and CE plants: each coolant loop in the CE plants includes two cold legs rather than one. This difference is accounted for by modeling both cold legs from the steam generator outlet plenums to the reactor vessel. The Westinghouse plant cold leg nodalization scheme shown in **Figure 5.1-2** is also recommended for each of the cold legs in a CE plant coolant loop.

Since the two cold legs in a CE plant are virtually identical the modeler may consider combining them into a single cold leg for economy. A technique for lumping identical parallel flow paths is described in Section 5.5. However, to retain model generality, it is recommended that the two cold legs not be lumped together. In situations where forced and natural circulation through the cold legs is lost (e.g., during a LOCA when the reactor coolant pumps are tripped and the loops are partially drained) asymmetric behavior of the two same-loop cold legs can occur. Depending on the simulation, this asymmetry can be important.

Figure 5.3-1 illustrates the possibility of same-loop cold leg asymmetry. To show detail, the elevations of the two cold legs have been offset slightly in the figure; in both the plant and the model, cold leg elevations are identical. Consider a transient where the total coolant loop circulation has been lost and the hot leg flow has been terminated. Emergency core cooling system (ECCS) flow is injected into both cold legs in each coolant loop of a CE plant. Under these conditions, the steam generator outlet plenums, the cold legs, and the reactor vessel downcomer contain single-phase liquid. As the ECCS injection continues, a thermal distribution appears: Liquid between the ECCS injection site and reactor vessel becomes cooler as the region is flushed by the cold injection flow while the remaining liquid is not so cooled. This effect, by itself, does not cause asymmetry between the same-loop cold legs. However, minor differences between the two cold legs (leading to different injection rates) and fluid mixing effects can cause an asymmetric flow pattern to develop. From these effects, fluid in the pump-to-ECCS site regions of the two cold legs may be expected to cool at different rates. When the cooling front reaches the reactor coolant pump, a flow instability is set up due to buoyancy effects. The cold fluid backflowing into the pump will reside above warmer fluid in the vertical cold leg piping from the loop seal to the pump. As a result, the cold leg in which this behavior is first experienced will start to flow in reverse while the other cold leg will start to flow in the normal direction.

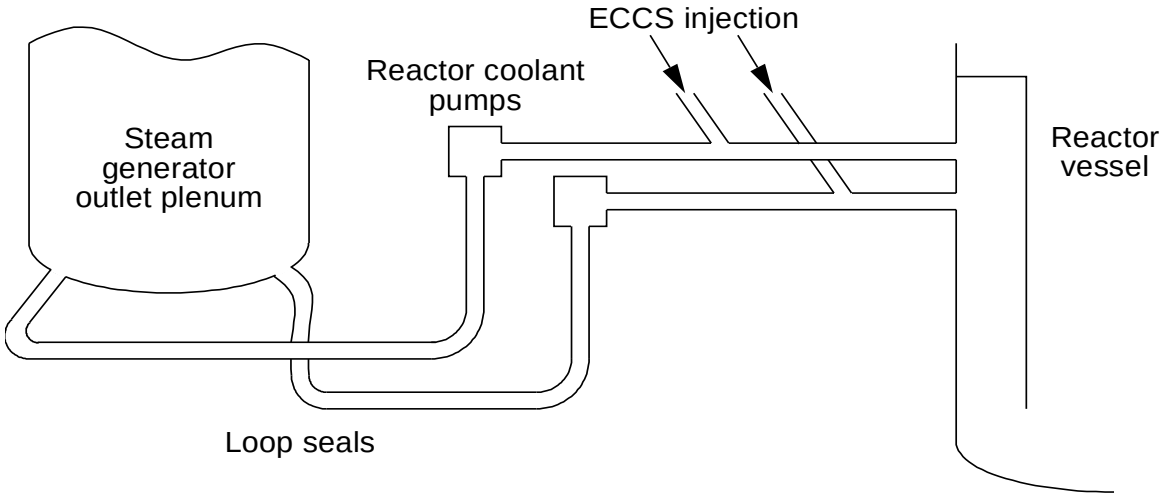

Figure 5.3-1 Cold leg recirculation in through same-loop cold legs in a Combustion Engineering plant.

Once initiated, this same-loop cold leg recirculation will tend to continue. The reverse-flowing cold leg continually sweeps the cold ECCS injection fluid into its pump suction region. This cold fluid is mixed with the warmer fluid in the steam generator outlet plenum and the warmed mixture enters the pump suction region of the forward-flowing cold leg. The difference in fluid densities between the two pump suction vertical regions thus provides a sustained buoyancy driving force for a recirculation flow between the two same-loop cold legs.

The same-loop cold leg recirculation pattern has been observed in several past RELAP5-3D© analyses. Depending on the simulation, this effect can be significant. For example, if the temperature of

fluid in the top of the reactor vessel downcomer is pertinent, the temperature is much higher if the recirculation is present than if it is not. Therefore, to retain model generality, it is recommended that both cold legs on each loop be included when modeling CE plants.

5.4 Notes on Modeling Pressurized Water Reactor Metal Structures

The base case example application in Section 5.1 provides detailed guidance on modeling metal structures within each of the PWR components. This guidance generally recommends that all metal structures that interact with the primary and secondary system coolant be included in a model. A frequent source of analysis error involves failing to follow this recommendation.

Developing input for heat structures can be tedious and requires another review of the component prints to obtain wall thicknesses, materials, etc. It is therefore tempting to include “active” heat structures but exclude “passive” heat structures from a model. For example, a PWR model with only active structures might include the core fuel rods and steam generator tubes (i.e., only the heat structures needed for simulating the plant steady-state heat balance are modeled). The resulting model often is not adequate for simulating PWR behavior. During a transient simulation, the “passive” metal structures (i.e., those not involved in the steady-state heat balance) can provide significant heat sources or sinks to the primary and secondary fluid systems. It is therefore highly recommended that the passive structures be included in a PWR model. As motivation to follow this recommendation, the analyst should consider that the heat stored in a PWR's passive heat structures (piping walls, component internals, and external shells) is approximately half that stored in the combined primary and secondary system coolants.

Another potential heat structure modeling difficulty regards initialization of heat structure temperatures in calculations that do not begin from a well-documented plant condition. In simulations that begin from PWR full-power steady-state conditions, the heat structures are adequately initialized by allowing the code to determine the thermal distributions within the structures that are consistent with the internal heat sources and the surface heat transfer rates. However, consider the example of starting a simulation at the beginning of reflood following a PWR large break LOCA. The heat structure thermal distributions at the beginning of core reflood will be significantly different than those at full power operation. A common modeling error is to overlook this difference and fail to re-initialize the heat structures at the proper conditions for the beginning of reflood. Often, the modeler recognizes the need to re-initialize the active heat structures, such as the fuel rods, but fails to re-initialize the passive heat structures.

Finally, the PWR modeler should consider the significance of environmental heat loss from the outer surfaces of the primary coolant system. The example PWR application provided in Section 5.1 neglects this heat loss by assuming adiabatic boundaries on the outer surfaces of the piping and shell heat structures. For PWRs, the environmental heat loss to containment during normal operation is about 8 MW, or about 0.3% of the core thermal power. Neglecting this heat loss generally does not significantly affect the simulation of most accident scenarios, even when the core power is only due to decay heat. However, the modeler should consider whether this assumption remains appropriate for transient simulations that include (a) very low decay heat levels, such as would be present long after a reactor trip, or (b) model

regions where localized heat losses may be important when compared with the coolant energy flows. For a sub-scale experimental facility, environmental heat losses generally should be modeled because for such facilities the ratio of these losses to the core power typically is much higher than for the full-size plants. Modeling the environmental heat loss is accomplished by specifying a convective boundary condition on the right side of all heat slabs representing the pressure boundary of the system. The modeler can specify a constant or time-varying sink temperature (ambient condition) and a heat transfer coefficient that is constant, time-varying, or a function of the surface temperature.

5.5 Lumping Coolant Loops

A technique with potential to minimize model complexity, assembly time, and computational time is to lump two or more PWR coolant loops together. However, individual loop modeling is preferred because it (a) maintains model generality, and (b) is not necessary to determine early in the modeling process if lumping loops is appropriate. If a modeler elects to lump coolant loops, the following discussion provides guidance for doing so. In this discussion, it is assumed that two loops will be lumped together into one in the model; a similar logic is used for lumping three loops together.

When lumping two coolant loops together, the lumped loop should be scaled up by a factor of two but remain hydraulically similar to the single loop. After scaling, the lumped loop will have twice the fluid volume, fluid flow area, heat structure metal volume, heat structure surface area, and mass flow rate as the single loop. Hydraulic similarity calls for the single and lumped loops to have the same flow velocities, pressure drops, and wall heat transfer coefficients. **Table 5.5-1** provides general guidance for lumping together two identical loops. The table shows what modifications need be performed to the input data of an existing single-loop model in order for them to represent two loops.

Table 5.5-1 Guidance for converting a single-loop model to a two-loop model.

Parameter	**Lumped loop vs. single loop**
Hydrodynamic Volumes	
Cell flow area	Twice
Cell length	Same
Cell volume	Twice
Azimuthal angle	Same
Inclination angle	Same
Elevation change	Same
Wall roughness	Same
Hydraulic diameter	Same[a]
Volume control flags	Same

Table 5.5-1 Guidance for converting a single-loop model to a two-loop model. (Continued)

Parameter	**Lumped loop vs. single loop**
Initial cell conditions	Same
Hydrodynamic Junctions	
Connection codes	Same
Junction flow area	Twice
Forward and reverse loss coefficients	Same
Junction control flags	Same[a]
Junction hydraulic diameter	Same
Countercurrent flow limiting parameters	Same
Initial velocities	Same
Initial mass flow rates	Twice
Heat Structures	
Numbers of axial heat structures	Same
Number of mesh points and geometry	Same
Steady-state initialization flag	Same
Left boundary coordinate	Same
Reflood flags	Same
Boundary volume indicator	Same
Maximum axial intervals	Same
Mesh location and format flags	Same
Mesh intervals and coordinates	Same
Composition data	Same
Relative source values	Same
Initial temperature data	Same
Boundary volumes, increments, and condition types	Same

Table 5.5-1 Guidance for converting a single-loop model to a two-loop model. (Continued)

Parameter	Lumped loop vs. single loop
Surface area codes	Same
Surface area or factors	Twice
Source type	Same
Internal source and direct heating multipliers	Twice
Heated equivalent diameter	Same[a]

a. Same unless zero (default value) is used in the single-loop model, in which case the actual single-loop number should be calculated and used.

5.6 Model Assembly Methods

In general, the model should match the physical system as closely as possible. To follow this philosophy, a very fine nodalization will be needed so that minor features of each fluid region within the plant can be represented. However, a very fine nodalization is not economic. The example PWR nodalizations in Section 5.1, Section 5.2, and Section 5.3 represent compromises between calculational fidelity and economy. These compromises have evolved over years of experience in applying RELAP5-3D© to a spectrum of plant accidents and transients at the INEEL and elsewhere.

To assemble a model, a set of information will be needed. The best sources of information are the complete drawings of the plant and documentation that describes its control and operation.

For hydrodynamic cells, it is necessary to input flow area, volume, length, inclination angle, elevation change, wall roughness, hydraulic diameter, volume control flags, and initial conditions. Unlike some thermal-hydraulic system codes, with RELAP5-3D© it is necessary for the cell flow area, volume, and length to be mathematically consistent. This requirement causes the modeler to compromise one of these input parameters in situations where the flow area within a cell changes as a function of position within the cell. Often, a satisfactory compromise is possible by considering which of the three parameters is least significant, and the effect on the problem because of the error introduced. If a compromise cannot be made because it would significantly alter the problem, then the modeler should make the nodalization fine enough so that behavior may be better simulated.

The input inclination (vertical) angle determines the applicable flow map, horizontal or vertical. With RELAP5-3D© , the flow map is horizontal if the magnitude of the inclination (vertical) angle is less than or equal to 30 degrees; it is vertical if the magnitude of the inclination (vertical) angle is greater than or equal to 60 degrees. Interpolation is used between 30 and 60 degrees. This is a departure from previous code versions where a switch between horizontal and vertical was made at 15 degrees. It is important that

the actual elevation change be input, since it is used in the gravity head and checking loop closure. The code requires the elevation change to be equal to or less than the cell length.

The wall roughness input should be consistent with the pipe material. In most PWR applications, good results are obtained with a commercial steel roughness of 0.00015 ft.[5.6-1] An exception is to use a drawn tubing roughness of 0.000005 ft[5.6-1] for the inner and outer surfaces of steam generator tubes. A hydraulic diameter should be calculated as four times the flow area divided by the wetted perimeter. This calculation is straightforward unless the geometry changes as a function of the length within the cell. In cases where the flow area changes continuously with length, the average flow area and hydraulic diameter may be used. In cases where the flow area changes in steps, length-weighted average flow area and hydraulic diameter may be used. In these situations, the modeler should consider the error introduced and use a finer nodalization if the error is not acceptable.

Volume control options should be based on the recommendations in Section 3.3.1. Volume initial conditions should be input based on the recommendations in Section 3.3.3.1. For most PWR system models, the model will be initialized at full or reduced power conditions. While the modeler may have some knowledge of the desired conditions, it is not necessary to precisely input them. Instead, only crude approximations of these conditions are needed because the actual steady-state conditions will later be calculated with the code (see Section 5.7).

For hydrodynamic junctions, it is necessary to input the connection codes, junction flow area, forward and reverse flow loss coefficients, junction control options, and junction initial conditions.

The junction connection codes specify the manner in which the hydrodynamic cells are connected. It is important that the modeler understands the conventions used for specifying the connection (see Section 4.6.3). The junction flow area does not need to be consistent with the flow areas of its adjacent hydrodynamic cells. However, the modeler should understand that the junction flow area should be consistent with any user-input flow loss coefficients. Generally, good pressure drop simulations have been obtained with pipe bend and fitting losses estimated using the methods in *Flow of Fluids Through Valves and Fittings.*[5.6-1] Another useful source of bend and fitting loss information is the *Aerospace Fluid Component Designer Handbook*.[5.6-2] An exhaustive catalog of flow losses in complex geometries is found in the *Handbook of Hydraulic Resistance.*[5.6-3] Junction control options should be input based on the recommendations in Section 3.3.2 and junction initial conditions should be input as described in Section 3.3.3.2. As with the hydrodynamic cells, it is generally not necessary to precisely specify the junction initial conditions in a PWR system model.

For heat structures, it is necessary to input information describing the heat structure cross-sectional geometry, surface area, and sources and sinks. Heat structure input requirements are summarized in Section 4.7 and guidance for modeling heat structures is provided in Section 3.2.2, Section 3.3.3.3, and Section 3.3.4.3. Additional information needed to model PWR heat structures typically includes wall thickness, materials, and data regarding the magnitude and distribution of heat sources and sinks.

To model control systems, it is necessary to obtain or develop block diagrams describing their function. Example PWR control systems are described in Section 5.1.7 and Section 5.2.5. The RELAP5-3D© control variable component is described in Section 4.10. The modeler is cautioned that plant documentation summarizing control systems is often incomplete or outdated. As a result, the actual current PWR control system setpoints and gains should be obtained and used.

5.6.1 References

5.6-1. Crane Co., *Flow of Fluids Through Valves and Fittings,* 1980.

5.6-2. Rocket Propulsion Laboratory, *Aerospace Fluid Component Designer Handbook*, RPL-TDR-64-25, February 1970.

5.6-3. I. E. Idelchik, *Handbook of Hydraulic Resistance,* 3rd Edition, Boca Raton, FL: CRC Press, 1994.

5.7 Obtaining Satisfactory Steady-State Conditions

Once the PWR model has been assembled as described in the previous section, it is necessary to obtain a satisfactory steady-state model condition to initiate transient calculations. Typically, a steady-state condition representing PWR full-power operation is calculated first. This calculation allows an overall verification that the model accurately represents the plant. For operating plants, measured full-power plant parameters are available.

The effort required to obtain a satisfactory steady-state system model calculation varies widely, and primarily depends on two factors: (a) the care and foresight with which the modeler has assembled the model, and (b) the willingness of the modeler to approach the task using a methodical series of steps that simplifies the process. If, during the assembly process, the modeler considers nodalization and assumptions, takes care when entering and checking the model input, and is willing to obtain satisfactory steady-state calculations for individual plant components, then success at attaining a system model steady-state calculation is ensured with only a modest effort. On the other hand, improper nodalization and assumptions, carelessness when entering or checking input data, and attempting to steady a full model without first steadying its components often lead to an expensive, prolonged effort.

The following sections describe a general method for obtaining steady conditions for a portion of a model, followed by a discussion of a step-by-step method application for obtaining a full power steady-state for the example PWR model in Section 5.1

5.7.1 General Method

Figure 5.7-1 illustrates a general method of obtaining a steady-state calculation for a portion of a system model. For example, the model portion may be one steam generator, a reactor vessel, a hot leg, a cold leg, or a combination of these. The method involves imposing inlet flow and outlet pressure boundary

conditions on manageable sections of the overall system model for the purpose of individually checking each section's performance before linking them together.

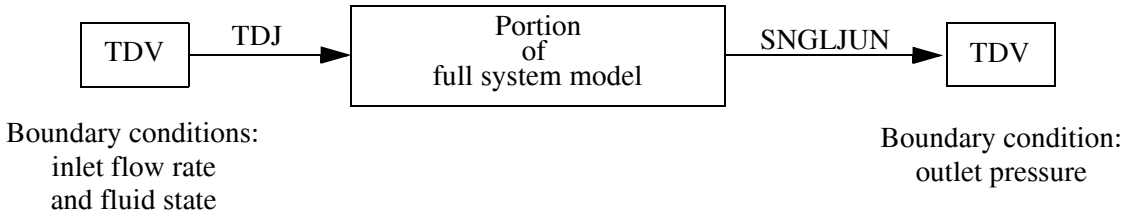

Figure 5.7-1 General method for driving a portion of a full system model to steady conditions.

The inlet flow boundary condition is specified by connecting time-dependent volume (TMDPVOL) and time-dependent junction (TMDPJUN) components at the upstream end of the model. A TMDPVOL specifies fluid condition (pressure, temperatures or specific internal energies of the phases, and void fraction or quality). A TMDPJUN specifies a flow velocity or mass flow rate. As described in Section 4.6.2 and Section 4.6.4, the “time-dependent” adjective is a misnomer because the boundary conditions may be specified as functions of virtually any calculated variable, not just time. However, for our purpose here, the inlet TMDPVOL and TMDPJUN will specify the constant fluid conditions and constant flow rate that are associated with the steady-state operation.

The outlet pressure boundary condition is specified by connecting the downstream end of the model to a TMDPVOL component through a normal RELAP5-3D© junction (such as a single-junction, valve junction, or branch junction). The outlet TMDPVOL specifies a constant pressure, representing the steady-state conditions.

The arrangement shown in **Figure 5.7-1** often is a source of confusion to beginning modelers. The inlet TMDPVOL is used only to specify the conditions of the fluid that the inlet TMDPJUN injects into the model. Therefore, changing the pressure of the inlet TMDPJUN affects the enthalpy of the inlet fluid but does not otherwise affect the pressure solution within the remainder of the model. The flow boundary condition specified at the inlet TMDPJUN effectively isolates the inlet TMDPVOL from the model. In other words, the TMDPJUN forces the inlet flow, regardless of the pressure difference across it. The pressure distribution within the model is defined by the downstream pressure (specified in the outlet TMDPVOL) and the flow behavior and losses generated within the model when the desired flow is passing through it. Thus, it is important to couple the model to the outlet TMDPVOL using a normal RELAP5-3D© junction so that the differential pressure across it may be accurately calculated.

The diagram shown in **Figure 5.7-1** represents only the simplest of modeling situations, such as coolant flow through a piping system with no heat addition or loss and no flow addition or leakage. This method would, for example, be adequate for obtaining a steady-state calculation for PWR hot leg piping.

The method is extended to these more complex situations (examples to be shown shortly) through the addition of heat or flow sources, as appropriate.

The method to obtain an acceptable steady-state condition for a portion of the model is to specify the inlet flow and outlet pressure boundary conditions (and in some instances heat and flow sources and sinks), execute the model portion, and compare the calculated model conditions with the desired conditions. In the example model shown in **Figure 5.7-1**, the calculated condition of interest is the pressure at the inlet of the model. If the modeler has carefully modeled the physical system, then the pressure drop across the model will closely match the actual pressure drop.

If the calculated conditions are in acceptable agreement with the measured or specified conditions, then the modeling approach is verified. However, if the agreement is not acceptable, then either (a) the measured data are not correct, or (b) one or more aspects of the model are incorrect. In most instances, the source of disagreement is found to be modeling error, rather than measurement error. When disagreements arise, the modeler should first review the appropriateness of the modeling assumptions and the model implementation.

In the example model, disagreement would be caused by failure to match the pressure drop across the model. First, the modeled flow rate and fluid density would be double-checked for accuracy. If, for example, the calculated pressure drop is too large, then too much flow loss has been included in the model. Flow losses result from a combination of distributed wall friction and lumped flow resistances. Generally, RELAP5-3D© adequately represents wall friction pressure drop if the appropriate wall roughnesses, hydraulic diameters and velocities are input. Therefore, the modeler should double-check the implementation of these parameters. Next, the input lumped flow losses should be checked. Often, the actual lumped losses are uncertain because of unique geometries and this gives the modeler license to adjust the input loss coefficients. Adjusting a lumped loss coefficient within the range of its reasonable uncertainty is justified if the change allows the model to come into agreement with measured data. Experience has shown that this step typically is successful. If it is not, then it is an indication of modeling error or misinterpretation of the measured data.

To demonstrate the application of the steady-state methods, consider the process of obtaining a full-power operation condition for the example Westinghouse plant described in Section 5.1. The following sections describe this process in a step-by-step manner.

5.7.2 Step 1-Reactor Vessel

Figure 5.1-1 shows the nodalization of the reactor vessel model. The model performance success criteria include matching measured data for core power, hot and cold leg flow rates, hot and cold leg fluid temperatures, the reactor vessel differential pressure, and the distribution of flow within the various reactor vessel internal flow paths. Section 5.1.1 provides additional discussion regarding reactor vessel initialization.

The reactor vessel model is exercised by applying a flow boundary condition for the inlet mass flow rate, a temperature boundary condition for the inlet fluid temperature, a pressure boundary condition for the outlet pressure, and a heat source boundary condition for the core power. This combination of boundary conditions ensures that the calculated total reactor vessel flow rate, hot leg pressure, and hot leg fluid temperature will be correct.

The first calculated solution for the reactor vessel likely will be quite close to the desired conditions. Minor adjustments of the lumped flow loss coefficients may be necessary to obtain the desired reactor vessel internal flow splits. These adjustments should be implemented in locations where the flow loss is not well known. The reactor vessel internal flow pattern solution is based on many individual flow paths in series and parallel configurations. Therefore, the adjustment process proves to be iterative. To minimize the effort, it is recommended that adjustments begin with paths with the highest flow rates and proceed toward paths with the lowest flow rates.

Experience has shown that the flow losses at the upper and lower core support plates and within the core bypass region are often not well known. In practice, adjusting the loss coefficients representing these features may be justified. Additionally, the applicable flow areas and losses of the leakage paths (the flow through component 100, and the flow from component 102 to component 120) are even less well known. For these paths, an arbitrary, but physically reasonable, flow area is selected and loss coefficients are adjusted as needed to obtain the desired flow rate.

5.7.3 Step 2-Steam Generator and Steam Lines

Figure 5.1-3 and **Figure 5.1-5**, respectively, show the nodalization of the steam generator and steam lines. The model performance success criteria include matching measured data for primary side flow rate, hot and cold leg temperatures, feedwater and steam flow rates, feedwater temperature, and the distribution of flow within the steam generator secondary side.

The steam generator model is checked out by applying boundary conditions for the hot leg flow rate, hot leg fluid temperature, cold leg pressure, feedwater fluid temperature, feedwater flow rate, and steam line pressure.

The first calculated solution for the primary side pressure drop likely will be quite close to the desired value. However, the cold leg temperature likely will not match its desired value. This is an indication that the steam generator heat removal rate is not correct. The source of the error is likely to be traced to a poor match between calculated and prototype behavior on the secondary side.

On the secondary side, heat transfer from the tubes to the fluid is controlled by the secondary fluid temperature and the velocity on the outer tube surface. The fluid temperature on the outside of the tubes is affected by the pressure and the recirculation ratio (the ratio of the steam generator downcomer flow rate to the feedwater flow rate). Lower recirculation ratios result in colder fluid entering the tube bundle and better heat removal in the lower region of the tube bundle. Since the majority of the tube length experiences saturated nucleate boiling heat transfer, tube heat transfer is strongly controlled by the

secondary fluid saturation temperature. As a result, changes in the secondary side pressure affect the saturation temperature and therefore influence the steam generator heat removal rate. The velocity on the outside of the tubes is also controlled by the recirculation ratio, with higher ratios resulting in higher velocities and therefore higher heat removal rates. RELAP5-3D© provides a one-dimensional (vertically upward) representation of the flow in the steam generator boiler. In the prototype steam generator, however, baffles produce a swirling boiler flow pattern. As a result, the RELAP5-3D© -calculated boiler flow velocity is lower than in the prototype and the calculated steam generator heat removal rate is too low.

Achieving a satisfactory simulation of U-tube steam generator secondary steady-state conditions generally requires (a) adjusting flow losses in the steam separator and boiler regions to achieve the desired recirculation ratio, (b) defining a downstream steam line pressure boundary condition (such as at the steam header, cell 800 in **Figure 5.1-5**) that provides the desired steam boiler pressure, and (c) using the minimum tube-to-tube spacing as the heated diameter on the secondary side of the tube heat structures to adjust for the multi-dimensional flow patterns of the prototype. Section 5.1.3 provides additional discussion of these adjustments.

5.7.4 Step 3-Coolant Loop with Reactor Coolant Pump

Figure 5.1-2 shows the nodalization of the reactor coolant loop. Models for the hot leg, pump suction cold leg, reactor coolant pump, and pump discharge cold leg are merged with the steam generator/steam line model. Step 2 obtained the desired steam generator primary differential pressure and hot and cold leg fluid temperatures when the coolant loop flow rate was prescribed as a boundary condition.

In this step, hot leg fluid temperature, hot leg flow rate, pump discharge cold leg pressure, and reactor coolant pump speed boundary conditions are specified as boundary conditions. In addition, on the secondary side, the boundary conditions from Step 2 are used (feedwater flow rate, temperature, and steam line pressure). The intent of this step is to obtain a satisfactory coolant loop differential pressure with the desired flow rate passing through it. The desired coolant loop differential pressure is the same as the reactor vessel differential pressure calculated in Step 1.

The wall friction losses in the hot and cold leg pipes are well calculated by RELAP5-3D© and, together with the satisfactory steam generator pressure drop from Step 2, a nearly-satisfactory coolant loop pressure drop is generally obtained on the first attempt. If needed, the loop pressure drop can be modified through minor adjustments in the pump specification (e.g., the pump speed or rated head).

5.7.5 Step 4-Feedwater System

Figure 5.1-5 shows the nodalization of the feedwater system model. While shown here for completeness, for many applications a detailed model of the feedwater system may not be required. For those applications, it may be sufficient only to specify the feedwater flow rate as a function of time (constant before a turbine trip, then linearly decreasing to zero over a few seconds following a turbine trip).

A detailed feedwater system model generally is only required for simulating transients where feedwater flow continues after a turbine trip because of assumed failures.

The feedwater system model is verified by specifying boundary conditions for the condenser temperature, inlet flow rate, heater drain system flow rate and temperature, feedwater heater power, condensate and main feedwater pump speeds, and outlet pressure.

On the inlet side, a TMDPVOL specifies the condenser fluid conditions, typically cold water at a vacuum pressure. A TMDPJUN forces flow from the condenser into the feedtrain at the desired rate. A similar arrangement is used for flow addition from the heater drain system. On the outlet side, the feedwater system model is connected to three TMDPVOLs (one for each steam generator) that specify constant pressure, consistent with the steam generator downcomer pressure obtained from Step 2.

Model tune-up should start at the steam generators and proceed upstream toward the condenser. Adjustments to the flow losses are made as needed to obtain the desired pressures within the system (typically, these are known at several locations). The losses are most uncertain across valves and heat exchangers, so adjustments at these locations often can be justified. Adjustments to pump parameters also may prove beneficial (see the discussion in Step 3).

The feedwater system model tune-up process can be considered successful when a satisfactory agreement is obtained between the calculated condensate pump inlet pressure and the desired condenser pressure (which was used as the inlet boundary condition). To allow this comparison to be made, it will be necessary to add a hydrodynamic calculational cell (e.g., a single-volume or branch component) between the condensate pump and condenser (components 824 and 822 in **Figure 5.1-5**). When agreement has been obtained, the additional cell is removed and the TMDPJUN is replaced with a normal junction (in this example the inlet junction of pump 824).

5.7.6 Step 5-Formation of the System Model

Steps 1 through 4 have produced models of the reactor vessel, steam generator/steam line, coolant loop, and feedwater systems that satisfactorily simulate the individual performance of these systems during full-power plant operation. Furthermore, the calculated conditions for these individual models are consistent at their adjoining boundaries.

Before combining the individual models into a system model, it is best to substitute the calculated steady conditions as the input initial conditions for each of the individual models. Recall that crude approximations of the initial conditions were input when the model was first assembled. Steps 1 through 4 have calculated the actual initial conditions (pressures, temperatures, flow rates, etc.) that represent full-power steady operation. If done by hand, this substitution is quite tedious; automated techniques for this process are available. It is not essential to substitute the initial conditions because the system model (including the modifications made from Steps 1 through 4) can be executed successfully to the desired steady solution. However, substituting the steady conditions into the input listing at this time is

advantageous because it minimizes the computer time needed to obtain a steady-state solution with the system model.

Two copies of the coolant loop model from Step 3 are made to simulate the other coolant loops in the plant. The component numbers on the copies are then changed, since each component must have a unique number. It is convenient if the same components in each of the loops have similar numbers. One method is to increment the hundreds digit from loop to loop (e.g., let components 206, 306, and 406 represent a comparable feature in the three loops.

The reactor vessel model from Step 1 is combined with the three coolant loop models, and the feedwater system model from Step 4 is appended to the steam generators on the coolant loops. The pressurizer model (see **Figure 5.1-4**) is then appended at the hot leg/surge line and cold leg/spray line connection points. When combining models, care must be taken to remove the components that were used to provide boundary conditions in previous steps, and to add hydrodynamic junctions to appropriately join the individual models. Referring to **Figure 5.1-5**, at this time it will be necessary to connect the three individual steam lines to the common header and add the common steam line (components 800, 802, 804, 806, 808, and 810) to the model. The modeler is required to specify the turbine header pressure (component 806) such that the steam header pressure (component 800) is the same as was used in Steps 2 and 3. The steam pressure boundary condition effectively is moved downstream to the turbine header. In practice, it is usually adequate to estimate the turbine header pressure by hand-calculating the pressure drop down the steam line and through the turbine stop valve.

The combined system model may now be executed as a unit. The boundary conditions remaining from the individual models are condenser pressure and fluid temperature; feedwater heater drain flow rate and fluid temperature; turbine header steam pressure; speeds for the main coolant, main feedwater, and condensate pumps; and powers for the core and feedwater heaters. In addition, it is necessary to add a boundary condition for the primary coolant system pressure. In the prototype, this function is provided by the pressurizer heaters and spray control systems that are not yet activated in the model. It is convenient to provide this pressure boundary condition by temporarily connecting a TMDPVOL (with the desired pressure specified) through a single-junction at a location in the primary coolant system where the pressure is well known. For example, this function might be accomplished by connecting a TMDPVOL (with the hot leg pressure and hot leg fluid temperature) to one of the hot leg components. This temporary TMDPVOL will donate liquid to, or accept liquid from, the reactor coolant system as needed to maintain the desired hot leg pressure.

If the previous steps have been accomplished successfully, the conditions calculated with the combined model should differ only slightly from the desired conditions calculated with the individual models. At this stage, adjustments in the primary side flow rates may be accomplished with minor changes in the reactor coolant pump speed. Once the desired flow rate is attained, the hot-to-cold leg differential temperature will be correct; however, the average coolant temperature (i.e., the average of the hot and cold leg temperatures) may be slightly high or low. This condition may be remedied by minor adjustment of the secondary system pressure (specified as a boundary condition at the turbine header).

At this point, the combined model should be executed through a null transient for a period of time to allow steady conditions to be obtained. Generally, this process requires a few hundred seconds of transient time to accomplish.

5.7.7 Step 6-Control Systems

The control systems that are active during normal plant operation are added to the model at this point. These systems include the steam generator level control, pressurizer pressure control, and pressurizer level control functions described in Section 5.1.7. Implementation of the control systems into the model has been delayed until this point because they require various calculated plant parameters as input. These parameters have not been available until Step 5 was completed. The input for the control systems is carefully reviewed and, if necessary, the controller initial conditions, biases, and setpoints are modified based on the calculated steady-state plant parameters. The temporary primary system pressure boundary condition imposed in Step 5 is then removed from the model.

The system model is executed again through a null transient, this time with the RELAP5-3D© control system models activated. This step is successfully completed when the controllers have driven their dependent variables (steam generator level, pressurizer level, and pressurizer pressure) to the desired values. A few hundred seconds of transient time are typically required to accomplish this process.

5.7.8 Step 7-Models of Non-operating Systems

Models of plant features, systems, trips, and control systems that are not activated during normal plant operation are now added to the model. These features include

- Accumulators.
- High- and low-pressure injection systems.
- Pressurizer power-operated relief valve and code safety valves.
- Main steam isolation valves.
- Steam generator power-operated relief valves and safety valves.
- Auxiliary feedwater systems.
- Turbine stop valve.
- Steam dump valves.

Since performance of these systems cannot be checked at the full power initial condition, it is important that the modeler independently check their performance.

Some of these independent checks can be made using simple models. For example, the RELAP5-3D© -calculated flow through a PORV can be independently checked against the valve design data using a model employing a valve and a few hydrodynamic cells. However, other checks will have to wait until the model development is complete, a successful steady-state condition has been calculated, and an active transient simulation is performed (see Step 8). For example, it necessary to perform an active transient calculation to determine if a PORV model opens and closes as intended.

A short null transient is run with the inactive features included in the model. This transient will confirm that input errors do not exist and that the inactive features do not, in fact, affect the steady-state solution.

5.7.9 Step 8-Final Tune-Up and Check-Out

A final check of the calculated full-power steady conditions is made. The modeler should check many, not just a few, plant parameters for steadiness. Generally, a completely stable set of conditions is not attained; some minor drifting of parameters continues. The modeler should determine the source of the drift and consider if its magnitude is acceptable. Common sources of drift are thermal gradients within the thicker heat structures of the model. For example, consider the reactor vessel wall with gamma heating. The wall is about five inches thick and the thermal time constant is such that perhaps thousands of null transient seconds are required for its thermal gradient to stabilize. In this case, the thermal capacity of the material may be artificially lowered, allowing the heat structure gradient to be quickly established during a null transient calculation. Once the proper gradient has been calculated, the true thermal capacity is restored to the model.

An active transient calculation should be performed to check the performance of plant features, trips, systems, and controllers that are not active during full power operation. Adjustments and corrections are implemented as appropriate.

At this point, the model is considered complete and confirmed. It is recommended that the final steady conditions attained be substituted back into the final model that created them (see discussion in Step 5). In this manner, the final form of the model is a complete input stream that includes the true steady initial conditions. From a quality assurance viewpoint, this method is advantageous because a single master file documents the complete model and its initial state. When it is desired to perform an active transient calculation, the master file is copied, and the model changes implementing the transient are incorporated into the copy. This new file may then document the complete model, the initial conditions, and the changes made.

Appendix A
Abstracts of RELAP5-3D© Reference Documents

J. P. Adams, C. A. Dobbe, and P. D. Bayless, "Numerical Simulation of PWR Response to a Small Break LOCA with Reactor Coolant Pumps Operating," *4th International Symposium on Multi-Phase Transport and Particulate Phenomena, Miami Beach, FL, December 1986*, EGG-M-32686, 1986.

Calculations have been made of the response of pressurized water reactors (PWRs) during a small break loss-of-coolant accident with the reactor coolant pumps (RCPs) operating. This study was conducted, as part of a comprehensive project, to assess the relationship between measurable RCP parameters, such as motor power or current, and fluid density, both local (at the RCP inlet) and global (average reactor coolant system). Additionally, the efficiency of using these RCP parameters, together with fluid temperature, to identify an off-nominal transient as either a loss-of-coolant accident, a heatup transient, or a cooldown transient and to follow recovery from the transient was assessed. The RELAP4 and RELAP5 computer codes were used with three independent sets of RCP two-phase degradation multipliers. These multipliers were based on data obtained in two-phase flow conditions for the Semiscale, LOFT, and Creare/Combustion Engineering Electric Power Research Institute pumps, respectively. Two reference PWRs were used in this study: Zion, a four-loop, 1,100-MWe Westinghouse plant operated by Commonwealth Edison Co. in Zion, Illinois and Bellefonte, a two-by-four loop, 1,213 MWe Babcock and Wilcox designed plant being built by the Tennessee Valley Authority in Scottsboro, AL. The results from this study showed that RCP operation resulted in an approximately homogeneous reactor coolant system and that this result was independent of the reference plant, computer code, or two-phase RCP head degradation multiplier used in the calculation.

S. N. Aksan, G. T. Analytis, and D. Luebbesmeyer, "Switzerland's Code Assessment Activities in Support of the International Code Assessment Program (ICAP)," *16th Water Reactor Safety Information Meeting, March 1989, Gaithersburg, MD*, Paul Scherrer Institute, Wuerenlingen, Switzerland.

Within the framework of the International Code Assessment Program (ICAP) of the U. S. Nuclear Regulatory Commission, independent code assessment analyses at the Paul Scherrer Institute have been performed using the RELAP5/MOD2 and TRAC-BD1/MOD1 thermal hydraulic transient codes. The assessment cases selected include both separate effects and integral tests. The calculations and analysis of most of the agreed assessment cases have been completed in this paper, and the main results and conclusions of these calculations are presented. As a result of these calculations and analysis, model changes are proposed for a number of special models that need to be further improved. Some of these proposals were tested in an experimental version of RELAP5/MOD2 at the Paul Scherrer Institute. The rapid cladding cooling and quench during the blowdown phase of a large break loss-of-coolant has also been investigated in some detail. The experimental evidence available from blowdown quench, such as that encountered in the loss-of-fluid test (LOFT) experiments, is reviewed. Calculations using the RELAP5/MOD2 code have been performed for the Organization for Economic Cooperation and Development (OECD)/LOFT LP-LB-1 and LP-02-6 tests to identify the codes ability to calculate the blowdown phase quench. To further investigate rapid cladding quenches, separate effects tests conducted

in the LOFT Test Support Facility have been calculated using a frozen version of RELAP5/MOD2. The preliminary results of these calculations and the conclusion are also presented.

S. N. Aksan, "Investigations on Rapid Cladding-Cooling and Quench During the Blowdown Phase of a Large Break Loss-of-coolant Accident Using RELAP5/MOD2," *Fourth International Topical Meeting on Nuclear Reactor Thermal-Hydraulics (NURETH-4), Vol. 1,* pp. 214-220, U. Mueller, K. Rehme, and K. Rust (eds.), Karlsruhe, Germany, Braun 1989.

This paper evaluates the best estimate code capability to predict the rapid, high system pressure, quenches measured in the LSTF experiments under well characterized inlet flow conditions intended to simulate the LOFT early quench hydraulics. Two of the LSTF experiments which are representative of the bounding hydraulic conditions for the LOFT blow down conditions are cohesion and evaluated by using advanced best estimate computer code RELAP5/MOD2. The experimental and predicted data comparison indicate that the calculations preformed with RELAP5/MOD2 can predict the experimental behavior of electrical rods during film boiling heat transfer and additional analytical work is necessary to better represent film-to-nucleate boiling transition heat transfer and subsequent quench behavior.

R. G. Ambrosek and R. P. Wadkins, "RELAP5 Benchmarking with ATR Star-Up Tests," *Transactions of the American Nuclear Society, June 1990.*

The Advanced Test Reactor (ATR) is a high-power test reactor with aluminum fuel, moderate pressure [2.52 MPa (365 psig) inlet], and low temperature [325 K (125°F) inlet]. Safety analyses for this reactor require evaluation for various transients that result in loss of coolant, flow, pressure, or a combination of these variables. Evaluation of the conditions requires a computer code that can predict system parameters and model the heat addition to the coolant inventory. Other codes can be used to evaluate detailed heat transfer capabilities and resultant fuel plate temperatures with calculated boundary conditions from the system code. The RELAP codes have been used to predict system characteristics for the ATR. They have been used to predict boundary conditions for use in codes to predict detailed fuel plate temperature. The RELAP5 computer code is being used for ATR safety evaluations and is one of the codes for performing a probabilistic risk assessment. Benchmark studies using some of the ATR start-up test data were performed to evaluate the predictive capability for reactor systems at moderate pressure and low coolant temperatures. The comparison of predicted to measured fuel plate temperatures indicated good agreement.

G. Th. Analytis, "Implementation and Assessment of Drift-Flux Post-Dryout Interfacial Shear Model in RELAP5/MOD2/36.02," *Transactions of the American Nuclear Society, 55*, 1987, pp. 707-709.

Interfacial shear f_i and heat transfer to the liquid h_{il} are of paramount importance for the correct prediction of liquid carryover and rod surface temperatures during reflooding. It has been shown recently that a new drift-flux model based bubbly/slug f_i correlation for rod bundles greatly improves the predicting capabilities of the RELAP5/MOD2/36.02 model in the analysis of boil-off and low flooding rate experiments.

G. Th. Analytis and M. Richner, "Effect of Bubbly/Slug Interfacial Shear on Liquid Carryover Predicted by RELAP5/MOD2 During Reflooding," *American Nuclear Society and Atomic Industrial Forum Joint Meeting, Washington, D. C., November 1986*, Wuerenlingen, Switzerland.

Analysis of very low flooding rate reflooding experiments and one boiloff experiment in the 33 electrically heated rod bundle NEPTUN at the Swiss Federal Institute for Reactor Research with RELAP5/MOD2/36.02 has shown that the code grossly overpredicts the liquid carryover. Similar results have been reported in the analysis of a large number of boiloff experiments in NEPTUN with TRAC-BD1/MOD1. In this case, the differences between measurements and predictions were attributed to the large bubble/slug interfacial shear in TRAC-BD1, and excellent agreement with the measurements was achieved by implementing a slightly modified version of a new bubbly/slug interfacial shear correlation developed for rod bundles. As far as reflooding is concerned, one of the most crucial parameters for the correct prediction of the rod surface temperature histories is the interfacial shear f_i in the different flow regimes; this term will largely determine the liquid fraction at certain axial elevation and the liquid carryover. The authors outline the implementation of the new bubble/slug f_i correlation in RELAP5/MOD2/36.02 and assess its influence in the liquid carryover in the analysis of low flooding rate experiments in NEPTUN.

G. Th. Analytis and M. Richner, *Implementation and Assessment of a New Bubbly/Slug Flow Interfacial Friction Correlation in RELAP5/MOD2/36.02*, TM-32-86-10, January 1986, Swiss Federal Institute for Reactor Research, Wuerenlingen, Switzerland.

Analysis of boiloff and low flooding rate reflooding experiments in the rod bundle NEPTUN with RELAP5/MOD2 has shown that the code grossly underpredicts the collapsed liquid level history in the test section because it over-predicts of the amount of water expelled. Similar problems were encountered in the analysis of the same boiloff experiments with TRAC-BD1 Version 12 and MOD1 and were resolved by implementing a new bubbly/slug flow interfacial friction correlation in this code. The authors report on the implementation of the new interfacial friction correlation in RELAP5/MOD2/36.02 as well as its consequences on the predicted collapsed liquid level histories in the rod bundle NEPTUN.

G. Th. Analytis, M. Richner, and S. N. Aksan, *Assessment of Interfacial Shear and Wall Heat Transfer of RELAP5/MOD2/36.02 During Reflooding*, EIR-Bericht Nr. 624, May 1, 1987, Eidgenoessisches Inst. fuer Reaktorforschung, Wuerenlingen Switzerland.

The analysis of a number of reflooding and one boiloff experiment in the electrically heated rod bundle NEPTUN at the Swiss Federal Institute for Reactor Research with RELAP5/MOD2/36.02 showed significant differences between measurements and predictions. The same was true for the analysis of two FLECHT-SEASET reflooding experiments. The authors report on these items and present the modifications made to the frozen version of RELAP5/MOD2/36.02. These changes eliminate most of the observed discrepancies.

G. Th. Analytis, M. Richner, and S. N. Aksan, "Qualification of Modifications of Interfacial Shear and Wall Heat Transfer of RELAP5/MOD2/36.02 During Reflooding," *Transactions of the American Nuclear Society, 55*, 1987, pp. 705-707.

Extensive assessment of RELAP5/MOD2/36.02 has been performed by using reflooding experiments performed at the heater rod bundle NEPTUN at the Swiss Federal Institute for Reactor Research and at the FLECHT-SEASET test facility. As a result of this work, a number of modifications were made in the interfacial shear and reflooding wall heat transfer packages of the code. The modifications are represented in this work.

G. Th. Analytis, M. Richner, M. Andreani, and S. N. Aksan, "Assessment of Uncertainty Identification for RELAP5/MOD2 and TRAC-BD1/MOD1 Codes Under Core Uncovery and Reflooding Conditions," *14th Water Reactor Safety Information Meeting, Gaithersburg, MD, October 27, 1986*, NUREG/CP-0082, Volume 5, February 1987, pp. 329-370, Swiss Federal Institute for Reactor Research, Wuerenlingen, Switzerland.

Assessment calculations for the thermal hydraulic transient computer codes RELAP5/MOD2 (frozen version 36.02) and TRAC-BD1/MOD1 (frozen version 22) were performed, at the Swiss Federal Institute for Reactor Research (EIR) under both core uncovery (boiloff) and reflooding conditions. The aim of the work was to assess the predicting capabilities of the frozen versions of the best estimate computer codes. Some of the reflooding and boiloff experimental data observed from the NEPTUN test facility at EIR were used for the assessment work. Model optimization calculations on nodalization and the effect of available options (e.g., heat slab sizes) are performed with a selected base case, and the same model is applied to the other experimental cases, covering a wide range of parameters. The authors report the results of these assessment calculations and identify and point out the existing uncertainty areas in boiloff and reflooding phenomena.

G. Th. Analytis, "Suppression of 'Numerical' Liquid Carryover in the Nearly-Implicit Hydrodynamic Solution Schemes of RELAP5/MOD2 During Reflood," *Fourth International Topical Meeting on Nuclear Reactor Thermal-Hydraulics (NURETH-4), Vol. 1,* U. Mueller, K. Rehme, and K. Rust, (eds), Karlsruhe, Germany, Braun, 1989.

All thermal hydraulic transient analysis codes exhibit solutions contaminated' by oscillations which, in most cases are not physical. The origin of these oscillations is diverse and they may exhibit themselves differently in different physical problems analyzed; though, in many cases, they may adversely influence the predicted capabilities of these codes. We report on some unphysical oscillations appearing when analyzing low flooding rate separate effect reflooding tests with RELAP5/MOD2 by employing both the standard Semi-implicit (SI) and the Courant limit (CL) violating Nearly-implicit (NI) hydrodynamic solution schemes of this code. We elaborate on the possible origin of these oscillations and their adverse effect on some of the predicted quantities and show the way that can be suppressed, resulting in better and more physically sound code predictions.

G. Th. Analytis, "Implementation of a Consistent Inverted Annular Flow Model in RELAP5/MOD2," *Winter meeting of the American Nuclear Society (ANS) and Nuclear Power and Technology Exhibit, San Francisco, CA, November 1989.*

Following a hypothetical loss-of-coolant accident (LOCA) in a light water reactor during the reflooding phase, inverted annular flow (IAF) can be an important regime. The aim of this work is to show how a consistent and physically sound IAF model can be implemented in RELAP5/MOD2.

G. Th. Analytis, "Assessment and Modifications of the Post-CHF Wall Heat Transfer Packages of RELAP5/MOD2.5 and RELAP5/MOD3," *Joint International Conference on Nuclear Engineering, San Francisco, CA, March 21-24, 1993.*

During the last few months, considerable effort has been spent on assessing the post-CHF wall heat transfer package of RELAP5/MOD3/v7j (R5M3) as well as on investigating the effect of some model differences between this code and its predecessor, RELAP5/MOD2.5 (R5M2). In this work, the authors outline the problems associated with the post-CHF wall heat transfer models and logic of R5M3 (which are partly responsible for the totally unphysical code predictions during reflooding), the main differences between R5M2 and R5M3 and the author shows that by implementing in both codes a physically realistic and sound wall-to-liquid heat transfer model, one can predict very well experimental results obtained in separate-effect bottom flooding tests.

C. M. Antonucci and P. A. Meloni, "RELAP5/MOD2 Analysis of the Station Blackout Experiment SP-ST-01, Performed in SPES Facility," *Joint International Conference on Nuclear Engineering, San Francisco, CA, March 21-24, 1993.*

SPES Integral Test Facility is a scale model of a commercial three-loop PWR plant, allowing the simulation of a wide range of accident scenarios. A loss of on/off site power test was carried out on this facility in November 1989, with the aim of investigating the effects induced in the primary system by the application of a "bleed and feed" procedure. This test, planned in the frame of the ENEA-NRC cooperation on Accident Management Program, was included in the test matrix of the international Code Assessment Program for validation of RELAP5/MOD2 code. This paper presents a survey of the results of the post-test calculations preformed with the above mentioned code.

K. H. Ardron and W. M. Bryce, "Assessment of RELAP5/MOD2 by Comparison with Separate Effects Experiments," *Third International Topical Meeting on Nuclear Power Plant Thermal Hydraulics and Operations, November 1988, Seoul, Korea.*

Two studies are described in which models in the RELAP5/MOD2 code are assessed by comparison with separate effects tests. In the first study, the horizontal stratification model in RELAP5/MOD2 is assessed. This model describes the flow of two-phase mixture through a small diameter offtake connected to a horizontal pipe containing a stratified flow. Comparison with separate effects test data shows that the model systematically underpredicts the quality in the offtake branch. A modified code version containing improved correlations gives improved agreement with the separate effects tests and with an integral test in

the Loss-of-Fluid Test Facility. In the second study, RELAP5/MOD2's ability to describe the counter current flooding limit (CCFL) is assessed using a test problem to show that the CCFL is calculated in a pressurized water reactor steam generator tube. A large overprediction of the CCFL limit is attributed to the special treatment in RELAP5/MOD2 for calculating interphase friction under conditions where void fraction decreases with elevation.

K. H. Ardron and A. J. Clare, *Assessment of Interphase Drag Correlations in the RELAP5/MOD2 and TRAC-PF1/MOD2 Codes*, Central Electricity Generating Board, Barnwood, U. K., July 1989.

An assessment is carried out of the interphase drag correlations used in modeling vertical two-phase flows in the advanced thermal hydraulic codes RELAP5/MOD2 and TRAC-PF1/MOD1. The assessment is performed by using code models to calculate void fraction in fully developed steam-water flows, and comparing results with predictions of standard correlations and test data. The study is restricted to the bubbly and slug flow regimes (void fractions below 0.75). For upflows, at pressures of interest in pressurized water reactor small break loss-of-coolant accident and transient analysis, the performance of the code models is generally satisfactory. Exceptions are (a) small hydraulic diameter channels at low pressures (p equal to or less than 4 MPa), and (b) large pipe diameters at void fractions exceeding 0.5. In these cases, void fraction errors are outside normal uncertainty ranges. For downflows, the code models give good agreement with limited available void fraction data. The numerical results given in this paper allow a rapid estimate to be made of void fraction errors likely to arise in a particular code application from deficiencies in interphase drag modeling.

K. H. Ardron and P. C. Hall, "U. K. Experience with RELAP5/MOD2," *15th Water Reactor Safety Information Meeting, Gaithersburg, Maryland, October 26, 1987*, Central Electricity Generating Board, Gloucester, England.

RELAP5/MOD2 is being used in the United Kingdom (U. K.) for analysis of small loss-of-coolant accidents and pressurized transients in a Sizewell B pressurized water reactor. To support this application and gain familiarity with the code, the Central Electricity Generating Board the United Kingdom Atomic Energy Authority (UKAEA) have analyzed a number of integral and separate effects tests with RELAP5/MOD2. Several reports on this work have been sent to the U. S. Nuclear Regulatory Commission (NRC) under a UK/NRC bilateral agreement. This paper presents a review of U. K. experience with RELAP5/MOD2 since the code was received in the U. K. in February 1985. Calculations are described of small loss-of-coolant accidents and pressurized transient experiments in the LOFT and LOBI test facilities, and boildown tests in the UKAEA THETIS facility. Code calculations are also compared with data on pull-through/entrainment effects in two-phase flow in an offtake branch connected to a horizontal pipe containing stratified flow. The code has generally performed well in the calculations attempted so far, and appears to represent a considerable improvement over earlier versions of RELAP5 in respect of stability, running speed, mass conservation errors, and accuracy. The modeling difficulties identified in the U. K. studies have been defects in the horizontal stratification entrainment model, used to calculate discharge from a side branch connected to a horizontal pipe in which there is stratified flow, and deficiencies in critical flow calculations when there is separated flow in the volume upstream of the break. Some

calculations are described with modified code versions containing improved models to illustrate the deficiencies.

N. Arne, S. Cho, and H. J. Kim, *Assessment of RELAP5/MOD2 Computer Code Against the Natural Circulation Test Data From Yong-Gwang Unit 2,* Republic of Korea, Research Center, June 1993.

The results of the RELAP5/MOD2 computer code simulation for the Natural Circulation Test in Yong-Gwang Unit 2 are analyzed here and compared with the plant operation data. The result of comparison reveals that the code calculation does represent well the overall macroscopic behaviors of thermal-hydraulic parameters in the primary and secondary system compared with the plant operating data. The sensitivity study is performed to find out the effect of steam dump flow rate on the primary temperatures and it is found that the primary temperatures are very sensitive to the steam dump flow rate during the Natural Circulation. Because of the inherent uncertainties in the plant data, the assessment work is focussed on the phenomena whereby the comparison between plant data and calculated data is based more on trends than on absolute values.

N. Arne, S. Cho, and S. H. Lee, *Assessment of RELAP5/MOD2 Computer Code Against the Net Load Trip Test Data from Yong-Gwang, Unit 2,* Korea Inst. of Nuclear Safety, Taejon, Korea, June 1993.

The results of the RELAP5/MOD2 computer code simulation for the 100% Net Load Trip Test in Yong-Gwang Unit 2 are analyzed here and compared with the plant operation data. The control systems for the control rod, feedwater, steam generator level, steam dump, pressurizer level and pressure are modeled to be functioned automatically until the power level decreased below 30% nuclear power. A sensitivity study on control rod worth was carried out and it was found that variable rod worth should be used to achieve good prediction of neutron power. The results obtained from RELAP5/MOD2 simulation agree well with the plant operating data and it can be concluded that this code has the capability in analyzing the transient of this type in a best estimate means.

R. Arroyo, *Assessment of RELAP5/MOD2 Against a Pressurizer Spray Valve Inadverted Fully Opening Transient and Recovery by Natural Circulation in Jose Cabrera Nuclear Station,* Union Electrica, SA, Madrid, Spain, June 1993.

This document presents the comparison between the simulation results and the plant measurements of a real event that took place in JOSE CABRERE nuclear power plant in August 30th, 1984. The event was originated by the total, continuous and inadverted opening of the pressurizer spray valve PCV-400A. JOSE CABRERA power plant is a single-loop Westinghouse PWR belonging to UNION ELECTRICA FENOSA, S. A. (UNION FENOSA), a Spanish utility which participates in the International Code Assessment and Applications Program (ICAP) as a member of UNIDAD ELECTRICA, S. A. (UNESA). This is the second of its two contributions to the program; the first one was an application case and this is an assessment one. The simulation has been performed using the RELAP5/MOD2 Cycle 36.04 code, running on a CDC CYBER 180/830 computer under NOS 2.5 operating system. The main phenomena have been calculated correctly and some conclusions about the 3-D characteristics of the condensation due to the spray and its simulation with a 1-D tool have been achieved.

H. Asaka et al., "Computer Code Simulation of Large-Scale Integral Experiments on PWR Thermal-Hydraulic Responses During Accidental Conditions," *Proceedings of the First International Conference on Supercomputing in Nuclear Applications (SNA '90), Mito City, Japan, March 12-16, 1990, pp. 210-217.*

Computer codes for analysis of pressurized water reactor (PWR) thermal-hydraulic responses on small-break loss-of-coolant accidents (SBLOCAs) and abnormal transients are being assessed and improved in the ROSA-IV Program of the Japan Atomic Energy Research Institute (JAERI) by analyzing experimental data taken in this Program. This paper summarized activities for assessment and improvement of the RELAP5/MOD2 code developed by the Idaho National Engineering Laboratory (INEL) for the United States Nuclear Regulatory Commission (USNRC). The code has been modified extensively by replacing the physical models. Also computational speed has been increased and a post-processing system has been newly developed. These efforts resulted in a faster-running version having a considerably improved accuracy in simulating SBLOCA experiments. The post-processing tool allows efficient interpretation of the computational results.

Babcock & Wilcox Owners Group Analysis Committee, *RELAP5/MOD2 Benchmark of OTIS Feed and Bleed Test #220899*, BAW-1903, March 1986.

The Once-Through Integral System (OTIS) facility was designed and built for the investigation of thermal-hydraulic phenomena associated with small break loss-of-coolant accidents. The facility is a one-loop (one hot leg, one steam generator, and one cold leg) scaled representation of a Babcock & Wilcox (B&W) 205 fuel assembly raised loop plant. In March 1984, OTIS Test 220899 was completed. Important phenomena observed include primary liquid cooldown, primary system depressurization with the pressurizer filling and the pressurizer solid, and impact of reactor vessel vent valves on core cooling and loop flows. The objective of this analysis is to simulate OTIS Test 220899 with the current B&W version of RELAP5/MOD2 (Cycle 36). The hot leg U-bend and steam generator noding are consistent with the modeling used for the Multiloop Integral System Test facility. A detailed system description of the OTIS facility in parallel with a discussion of the RELAP5 model is presented. Results of the study and concluding comments are also presented.

R. T. Bailey, D. A. Kalinich, and C. Y. Chou "SRS K-Reactor PRA LOCA Analyses Using Best-Estimate Methods," *Probabilistic Safety Assessment International Topical Meeting (PSA), Clearwater Beach, FL, 1991.*

The thermal-hydraulic system computer code RELAP5/MOD2.5 was used to investigate the response of the primary cooling system during loss-of-coolant accidents (LOCAs) at the Savannah River Site (SRS) K-Reactor. In contrast to the conservative safety analyses performed to support the restart of K-Reactor, the assumptions and boundary conditions used in the analyses described in this paper were carefully selected to reflect best-estimate values wherever possible. The results of the calculations indicate that, for a small break LOCA, one functional emergency cooling system pumping source combined with one operational injection path will maintain core cooling. For a large break LOCA, one additional injection path is needed. The incorporation of these results into the latest SRS K-Reactor Probabilistic Risk

Assessment (PRA) contributed significantly to the reduction in severe core melt frequency over the previous version.

Y. S. Bang, J. J. Kim, and S. H. Kim, *Assessment of RELAP5/MOD2 Cycle 36.04 with LOFT Large Break LOCA L2-3,* Korea Inst. of Nuclear Safety, Taejon, Korea, April 1992.

The LOFT LOCA L2-3 was simulated using the RELAP5/MOD2 Cycle 36.04 code to assess its capability to predict the thermal-hydraulic phenomena in LBLOCA of the PWR. The reactor vessel was simulated with two core channels and split downcomer modeling for a base case calculation using the frozen code. From the results of the base case calculation, deficiencies of the critical flow model and the CHF correlation at high flow rate were identified, and the severeness of the rewetting criteria were also found. Additional calculation using an updated version of RELAP5/MOD2 Cycle 36.04 including modifications of the rewet criteria shows a substantial improvement in the core thermal response.

Y. S. Bang, K. Q. Seul, and H. J. Kim, *Assessment of RELAP5/MOD3 with the LOFT L9-1/L3-3 Experiment Simulating an Anticipated Transient with Multiple Failures,* Korea Inst. of Nuclear Safety, Taejon, Korea, February 1994.

The RELAP5/MOD3 5m5 code is assessed using the L9-1/L3-3 test carried out in the LOFT facility, a 1/60-scaled experimental reactor, simulating a loss of feedwater accident with multiple failures and the sequentially-induced small break loss-of-coolant accident. The code predictability is evaluated for the four separated sub-periods with respect to the system response; initial heatup phase, spray and power operated relief valve (PORV) cycling phase, blowdown phase and recovery phase. Based on the comparisons of the results from the calculation with the experiment data, it is shown that the overall thermal-hydraulic behavior important to the scenario such as a heat removal between the primary side and the secondary side and a system depressurization can be well predicted and that the code could be applied to the full-scale nuclear power plant for an anticipated transient with multiple failures within a reasonable accuracy. The minor discrepancies between the prediction and the experiment are identified in reactor scram time, post-scram behavior in the initial heatup phase, excessive heatup rate in the cycling phase, insufficient energy convected out the PORV under the hot leg stratified condition in the saturated blowdown phase and void distribution in secondary side in the recovery phase. This may cone from the code uncertainties in predicting the spray mass flow rate, the associated condensation in the pressurizer and junction fluid density under stratified condition.

R. Bavalini et al., "Analysis of Counterpart Tests Performed in Boiling Water Reactor Experimental Simulators," *Nuclear Technology, 97,* No. 1, January 1992, pp. 113-130.

In this paper the main results obtained at the University of Pisa on small-break loss-of-coolant accident counterpart experiments carried out in boiling water reactor (BWR) experimental simulators are summarized. In particular, the results of similar experiments performed in the PIPER-ONE, Full Integral Simulation Test (FIST), and ROSA-III facilities are analyzed. The tests simulate a transient originated by a small break in the recirculation line of a BWR-6 with the high-pressure injection systems unavailable. RELAP5/MOD2 nodalizations have been set up for these facilities and for the reference BWR plant. The

calculated results are compared among each other and with the experimental data. Finally, the merits and the limitations of such a program are discussed in view of the evaluation of code scaling capabilities and uncertainty.

R. Bavalini and F. D'Auria, *Scaling of the Accuracy of the RELAP5/MOD2 Code,* February 1993.

This paper presents an attempt to derive uncertainty values in the prediction of BWR and PWR transient scenarios. The small break LOCA counterpart tests performed in the BWR simulators Piper-one, FIRST and ROSA-III, and natural circulation experiments performed in the PWR simulators LOBI, SPES and LSTF, constitute the basis of the activity. The application of RELAP5/MOD2 to the analyses of the above experiments, the evaluation of the comparison between predicted results and measured data, and the calculation of the BWR and PWR plants scenarios, were fundamental in achieving the proposed goal. The main result of the activity is constituted by the development of a methodology suitable for deriving uncertainty values of code calculations. The values reported for the uncertainty should be considered as the result of a demonstrative pilot application of the methodology.

P. D. Bayless and R. Chambers, *Analysis of a Station Blackout Transient at the Seabrook Nuclear Power Plant*, EGG-NTP-6700, September 1984.

A postulated station blackout transient at the Seabrook Nuclear Power Plant was analyzed in support of the U. S. Nuclear Regulatory Commission's Severe Accident Sequence Analysis Program. The RELAP5/MOD2 and SCDAP/MOD1 computer codes were used to calculate the transient from initiation through severe core damage. The base transient, the TMLB' sequence, assumed no offsite power, onsite power, emergency feedwater, or operator actions. Additional analyses investigated the sensitivity to the core modeling and a potential mitigating action.

P. D. Bayless, C. A. Dobbe, and R. Chambers, *Feedwater Transient and Small Break Loss of Coolant Accident Analyses for the Bellefonte Nuclear Plant*, NUREG/CR-4741, EGG-2471, March 1987.

Specific sequences that may lead to core damage were analyzed for the Bellefonte Nuclear Plant as part of the U. S. Nuclear Regulatory Commission's Severe Accident Sequence Analysis Program. The RELAP5, SCDAP, and SCDAP/RELAP5 computer codes were used in the analyses. The two main initiating events investigated were a loss of all feedwater to the steam generators and a small cold leg break loss-of-coolant accident. The transients of primary interest within these categories were the TMLB' and S2D sequences. Variations on systems availability were also investigated. Possible operator actions that could prevent or delay core damage were identified, and two were investigated for a small break transient. All of the transients were analyzed until either core damage began or long-term decay heat removal was established. The analyses showed that for the sequences considered, the injection flow from one high-pressure injection pump was necessary and sufficient to prevent core damage in the absence of operator actions. Operator actions were able to prevent core damage in the S2D sequence, no operator actions were available to prevent core damage in the TMLB' sequence.

R. J. Beelman et al., "RELAP5 Desktop Analyzer," *International RELAP5 Users Seminar, College Station, TX, January 31, 1989.*

The previously mainframe-bound RELAP5 reactor safety computer code has been installed on a microcomputer. A simple color-graphic display driver has been developed to enable the user to view the code results as the calculation advances. To facilitate future interactive desktop applications, the Nuclear Plant Analyzer (NPA), also previously mainframe-bound, is being redesigned to encompass workstation applications. The marriage of RELAP5 simulation capabilities with NPA interactive graphics on a desktop workstation promises to revolutionize reactor safety analysis methodology.

R. J. Beelman, "Analyst Productivity and the RELAP5 Desktop Analyzer," *Transactions of the American Nuclear Society, Winter Meeting of the ANS and Nuclear Power and Technology Exhibit, San Francisco, CA, November 1989.*

Historically, the productivity of a numerical reactor safety analyst has been hampered by several factors; poor mainframe computer turnaround for problem setup, checkout, and initialization; limited mainframe CPU allocation, accessibility and availability for transient advancement; lost or delayed output; and difficulty assimilating numerical results. Clearly, an economical engineering workstation capable of running RELAP5 interactively, and of simultaneously displaying the results in a coherent graphic fashion as they are produced, would alleviate many of these concerns. The RELAP5 desktop analyzer (RDA) is such a workstation. Although not yet capable of real-time simulation, the RDA will nevertheless reduce analysis costs and enhance analyst productivity since analysis cannot be done in real time anyway. The RDA is a microcomputer-based reactor transient simulation, visualization, and analysis tool developed at the Idaho National Engineering Laboratory (INEL) to assist an analyst in simulating and evaluating the transient behavior of nuclear power plants. The RDA integrates RELAP5 advanced best-estimate engineering simulation capabilities with on-line computer graphics routines allowing interactive reactor plant transient simulation and on-line analysis of results, or replay of past simulations, by means of graphic displays.

R. J. Beelman, "Nuclear Plant Analyzer Desktop Workstation," *Transactions of the Eighteenth Water Reactor Safety Information Meeting, Gaithersburg, MD, October 1990.*

In 1983 the U. S. Nuclear Regulatory Commission (USNRC) commissioned the Idaho National Engineering Laboratory (INEL) to develop a Nuclear Plant Analyzer (NPA). The NPA was envisioned as a graphical aid to assist reactor safety analysis in comprehending the results of thermal-hydraulic code calculations. The development was to proceed in three distinct phases culminating in a desktop reactor safety workstation. The desktop NPA is now complete. The desktop NPA is a microcomputer based reactor transient simulation, visualization and analysis tool developed at INEL to assist an analyst in evaluating the transient behavior of nuclear power plants by means of graphic displays. The NPA desktop workstation integrated advanced reactor simulations codes with on-line computer graphics allowing reactor plant transient simulation and graphical presentation of results. The graphics software, written exclusively in ANSI standard C and FORTRAN 77 and implemented over the UNIX/X-windows operating environment, is modular and is designed to interface to the NRC's suite of advanced thermal-

hydraulic codes to the extent allowed by that code. Currently, full, interactive, desktop NPA capabilities are realized only with RELAP5.

R. J. Beelman, "Applicability of RELAP5 to Advanced Passive Reactor Designs," *American Nuclear Society (ANS) Winter Meeting, Washington, D.C., November 11-15, 1990.*

A review of the proposed Westinghouse AP600 and ASEA Brown-Boveri (ABB) PIUS design technologies has been completed to ascertain the applicability of RELAP5 to these advanced reactor designs. Experience gained in developing a RELAP5 AP600 model is presented in this paper. Difficulties in simulating the integral response of the AP600 reactor coolant system (RCS), passive safety features (PSFs), and containment with RELAP5 are discussed. Difficulties in modeling the PIUS PSFs are also discussed. Areas in which modification or extension of RELAP5 may be required to characterize transient response of these designs are identified.

R. J. Beelman, "The Prospect of a RELAP5 Based Full Scope Training Simulator," *1991 Simulation Multiconference; New Orleans, LA, April 1-5, 1991.*

The current generation of pressurized water reactor (PWR) full scope training simulators run specialized thermal-hydraulic simulation codes primarily designed to drive the process instrumentation displays in a representative manner. The current focus on replica simulator fidelity has revealed the limitations of these codes and has given rise to the need to upgrade the simulators' thermal-hydraulic capabilities in many cases. Recent quantum advances in microprocessor technology have enabled real time, interactive execution of RELAP5 on microcomputers. Consolidation of the computational basis for plant licensing and replica simulation is now possible. In this paper the feasibility of RELAP5 based full scope simulation is presented and substantiated by benchmarks and by experience gained with an interactive RELAP5 engineering simulator model of a present-day reactor plant.

C. Billa, F. D'Auria, N. Debrecin, and G. M. Galassi, "Applications of RELAP5/MOD2 to PWR International Standard Problems," *Winter Meeting of the American Nuclear Society (ANS), San Francisco, CA, November 1991.*

The evaluation of the accuracy of large thermal-hydraulic codes and the safety margins of light water reactors are among the objectives of international research programs such os organized by the Committee on the Safety of Nuclear Installations (CSNI) and the International Code Assessment and Application Program. Solution of these problems would ensure the effectiveness of engineered safety features and eventually lead to cost reductions through better design. These activities could also contribute to determining a uniform basis on which to assess the consequences of reactor system failures in nuclear power plants. To achieve a qualified code, an evaluation of comparisons with available experimental data is necessary. The CSNI promotes such activities, which constitute the international standard problems (ISPs). The purpose of this paper is to discuss the relevant findings in the pre- and posttest analysis of ISPs 18, 20, 22, 26, and 27. The reference code is RELAP5/MOD2 cycle 36.04 installed on an IBM computer.

J. C. Birchley, *RELAP5/MOD2 Analysis of LOFT Experiment L9-3,* Atomic Energy Establishment, Winfrith, U. K., April 1992.

An analysis has been performed of LOFT Experiment L9-3, a loss-of-feedwater anticipated transient without trip, in order to support the validation of RELAP5/MOD2. Experiment L9-3 exhibited a rapid boildown of the steam generator, following the loss of feed, with the reactor remaining close to its initial power until the steam generator tubes became sufficiently uncovered for primary to secondary heat transfer to be significantly reduced. The ensuing heat up of the primary fluid resulted in a reduction in power induced by the moderator feedback. The primary system pressure increased to the safety relief valve setpoint, before the fall in reactor power allowed the mismatch between primary system heat input and heat removal via the steam generator to be accommodated by cycling of the pilot operated relief valve (PORV). Comparison between calculation and data shows generally good agreement, though with discrepancies in some areas. Weaknesses in the code's treatment of interphase drag and in the representation of the pressurizer spray are indicated, although a shortage of definitive data, particularly in the stem generator, may also be a factor. The overprediction of interphase drag led to a tendency to underpredict the initial inventory in the steam generator and also, perhaps, to overpredict the steam generator heat transfer while the tubes were being uncovered. There is indication that the pressurizer vapor region conditions were close to equilibrium during spray operation. The point kinetics model in RELAP5/MOD2 proved a viable means of representing the power history for this transient.

J. C. Birchley, *LOFT Input Dataset Reference Document for RELAP5 Validation Studies,* AEA Technology, Winfrith, U. K., April 1992.

Analysis of LOFT experiment data are being carried out in order to validate the RELAP5 computer code for future application to PWR plant analysis. The MOD1 dataset was also used by CEGB Barnwood who subsequently converted the dataset to run with MOD2. The modifications include changes to the nodalization to take advantage of the crossflow junction option at appropriate locations. Additional pipework representation was introduced for breaks in the intact (or active) loop. Further changes have been made by Winfrith following discussion of calculations performed by the CEGB and Winfrith. These concern the degree of noding in the steam generator, the fluid volume of the steam generator downcomer, and the location of the reactor vessel downcomer bypass path. This document describes the dataset contents relating to the volume, junction, and heat slab data for the intact loop, reactor pressure vessel, broken loop, steam generator secondary, and ECC system. Also described are the control system for steady-state initialization, standard trip settings and boundary conditions.

T. Blanchat and Y. Hassan, “Comparisons of Critical Heat Flux Correlations with Bundle Flows,” *Annual Meeting of the American Nuclear Society, Atlanta, GA, June 1989*.

The critical heat flux has been the subject of research in the field of boiling heat transfer by nuclear engineers for many decades. The objective of this study is to predict the behavior of the secondary side of the once-through steam generator using the RELAP5/MOD2 computer code and, in particular, to obtain a better prediction of critical heat flux in bundles.

T. K. Blanchat and Y. A. Hassan, "Thermal-Hydraulic Analysis of a Nuclear Once Through Steam Generator Using RELAP5/MOD2 Computer Code," *Third International Topical Meeting on Nuclear Power Plant Thermal Hydraulics and Operations, Seoul, Korea, November 1988*.

A RELAP5 computer code model for a once-through steam generator has been developed. Parametric studies were conducted. Underprediction of the heat transfer in the nucleate boiling flow was mitigated (or corrected) by reducing the hydraulic diameter through the use of the small distance between the tubes. A new flow regime map for flow in bundles was developed and implemented in the code. This new flow regime map more accurately predicts transition for slug-to-annular flow. Consequently, improved saturated conditions for the fluid flow at the entrance to the boiler were obtained.

T. K. Blanchat and Y. A. Hassan, "Comparison Study of the Westinghouse Model E Steam Generator Using RELAP5/MOD2 and RETRAN-02," *Transactions of the American Nuclear Society, 55*, 1987, pp. 699-701.

The response of a steam generator during both operational and transient conditions is of major importance in studying the thermal-hydraulic behavior of a nuclear reactor coolant system. The objective of this study is to predict the behavior of the secondary side of the Westinghouse Model E steam generator using the RELAP5/MOD2 computer code. Steady-state conditions and a loss-of-feedwater transient were predicted and compared with a previous study using the RETRAN-02 computer code. The comparison showed an agreement with the previous study for steady-state calculations.

T. Blanchat and Y. Hassan, "Investigation of Two-Phase Horizontal Stratified Flow with Pulsed Laser Velocimetry," *Annual Meeting of the American Nuclear Society, Orlando, FL, June 2-6, 1991.*

Investigation of a two-phase, horizontal, stratified flow regime is being performed to determine the interface drag force and, correspondingly, the drag coefficient. The drag force is due to the relative motion between the two fluids at the interface. This drag force cannot be solved with analytical methods but can be experimentally determined. Interphase drag plays an important role in two-phase fluid regimes. The study to two-phase (and similarly two-component) flow regimes is necessary to properly understand and model complex fluid flows. Many computer codes that predict two-phase fluid flow must determine interphase drag force. Typically, a drag coefficient correlation is used that was empirically determined. One such code is RELAP5/MOD2. This code is used extensively in the nuclear power industry to simulate a wide range of steady-state, transient, and accident conditions in pressurized water reactors. Some researchers have found that thermal-hydraulic codes do not model constitutive two-phase flow relations very well. This deficiency has been attributed to an overprediction of the drag force, which may be caused by an inappropriate drag coefficient. Two-phase stratified flow information is being determined by the pulsed laser velocimetry (PLV) method. This technique is a full-field, two-dimensional, noninvasive flow visualization technique. Many investigators have utilized this and similar imaging techniques to obtain full-field velocity measurements.

M. A. Bolander, *RELAP5/MOD2.5 Thermal Hydraulic Analysis for an Alternate Fuel Design in the N-Reactor*, EGG-EAST-8382, June 1989.

This report documents work performed at the Idaho National Engineering Laboratory in support of the Westinghouse Hanford Company safety analyses of the N-Reactor. This work included (a) developing a RELAP5/MOD2.5 N-Reactor separate effects alternate fuel design model, (b) performing a RELAP5/MOD2.5 computer code validation for N-Reactor applications, (c) performing a radiation heat transfer sensitivity study to observe the effects of radiation heat transfer for a design-basis accident, and (d) performing and analyzing RELAP5/MOD2.5 scoping calculations using the alternate fuel design model for a design basis accident.

M. A. Bolander, *Simulation of a Cold Leg Manifold Break Sequence in the N-Reactor with a Failure of an ECCS CV-2R Valve*, EGG-TFM-7988, February 1988.

This final report documents our analyses of the cold leg manifold break with one ECCS CV-24 check valve failing to open.

M. A. Bolander and C. D. Fletcher, *Simulation of Cold Leg Manifold Break and Station Blackout Sequences in the N-Reactor*, EGG-TFM-7891, February 1988.

This report documents work performed at the Idaho National Engineering Laboratory in support of the Westinghouse Hanford Company safety analyses of the N-Reactor. This work included (a) developing a RELAP5/MOD2 N-Reactor model from information contained in an existing RETRAN model, (b) modifying the RELAP5/MOD2 computer code for simulation of reflood behavior in horizontal core channels, and (c) performing and analyzing RELAP5/MOD2 transient calculations simulating N-Reactor response during two hypothetical accidents.

M. A. Bolander and C. D. Fletcher, *Simulation of Inlet and Outlet Riser Break Sequences in the N-Reactor*, EGG-TFM-7930, February 1988.

This report documents work performed at the Idaho National Engineering Laboratory in support of the Westinghouse Hanford Company safety analyses of the N-Reactor. The RELAP5/MOD2 computer code was used in analyzing two hypothetical transients. The computer code was modified specifically to simulate the refill behavior in the N-Reactor process tubes. The transients analyzed were a double-ended rupture of an inlet riser column and a double-ended rupture of an outlet riser column.

M. A. Bolander, J. C. Chapman, and C. D. Fletcher, *Simulation of Cold Leg Manifold Break and Station Blackout Revised Sequences for Reduced ECCS (Emergency Core Cooling System) in the N-Reactor*, EGG-TFM-7962, February 1988.

This report presents analyses of two loss-of-coolant accident sequences of the N-Reactor using the RELAP5/MOD2 computer code. RELAP5/MOD2 is a best-estimate, two-phase, nonhomogeneous, nonequilibrium, thermal hydraulic, computer code designed for light water pressurized reactor transients. The N-Reactor is a graphite-moderated, pressurized water reactor. The primary coolant is channeled through 1003 horizontal pressure tubes that contain two concentric tubular metallic fuel elements. The two accident sequences simulated were a double-ended guillotine break in the cold leg manifold and a station

blackout. Both simulations cover the period beginning with the (a) initiating event, (b) either the break or the loss of ac power, and (c) the stabilization of the core fuel element temperatures. (The station blackout calculation was carried out until the core was quenched.) The discussion presented in this report includes brief descriptions of the N-Reactor, the computer code and specific code modifications for horizontal reflood, and the computer code model used for the simulation. The results and the analyses of the two calculations are also presented.

M. A. Bolander et al., "RELAP5 Thermal-Hydraulic Analyses of Overcooling Sequences in a Pressurized Water Reactor," *International Meeting on Thermal Nuclear Reactor Safety, Karlsruhe, Federal Republic Germany, September 1984*, KFK-3880/1, pp. 311-319.

In support of the Pressurized Thermal Shock Integration Study, the Idaho National Engineering Laboratory has performed analyses of overcooling transients using the RELAP5/MOD1.6 and MOD2 computer codes. These analyses were performed for the H. B. Robinson Unit 2 pressurized water reactor, a Westinghouse 3-loop design plant. Results of the RELAP5 computer codes as a tool for analyzing integral plant transients requiring a detailed plant model, including complex trip logic and major control systems, are examined.

J. S. Bollinger and C. B. Davis "Benchmarking the RELAP5/MOD2.5 Model r-R of an SRS (Savannah River Site) Reactor to the 1989 L-Reactor Tests," *1990 Joint RELAP5 and TRAC-BWR International User Seminar, Chicago, IL, September 17-21, 1990.*

Benchmarking calculations utilizing RELAP5/MOD2.5 with a detailed multi-dimensional r-R model of the SRS L-Reactor will be presented. This benchmarking effort has provided much insight into the two-component two-phase behavior of the reactor under isothermal conditions with large quantities of air ingested from the moderator tank to the external loops. Initial benchmarking results have illuminated several model weaknesses which will be discussed in conjunction proposed modeling changes. The benchmarking work is being performed to provide a fully qualified RELAP5 model for use in computing the system response to a double ended large break LOCA.

J. Boone, *KFACT Form Loss Coefficient Calculations for RELAP5/MOD2 Input Decks*, Duke Power Company, September 1989.

This document and the source code are Duke Power proprietary and cannot be distributed without prior consent of Duke Power.

C. P. Bott and Y. A. Hassan, "RELAP5/MOD3 Pre-predictions of the BETHSY Integral Test Facility for international Standard Problem 27," *Winter Meeting of the American Nuclear Society (ANS), San Francisco, CA, November 1991.*

The modeling of the thermal hydraulics of a reactor systems involves the use of experimental test systems as well as numerical codes. The verification of these models may be approached by comparative simulation of various reactor conditions using the different models. The computer code RELAP5/MOD3

was used to model the BETHSY Integral Test Facility for a small-break loss-of-coolant accident (SBLOCA). This transient simulates a 2-inch cold-leg break without high-pressure, safety injection, following the conditions of International Standard Problem (ISP) 27. The ISP accident scenarios are an attempt to simulate realistic accident cases involving combinations of safety system operation and failure as well as operator actions and delays. The numerical model was designed without transient results from the test, making the calculation a blind or pretest prediction. The purpose of this calculation is to observe the accuracy of RELAP5/MOD3 in predicting thermal-hydraulic conditions for long transients and to test the ability of the code to calculate plant pressure drops without experimental data. The results attempt to show the full-scale plant response to a SBLOCA using a scaled experimental model for plant simulation and a best estimate numerical model (RELAP5) for simulation of the experimental facility.

C. P. Bott, J. A. Handerson, S. C. Robert, and Y. A. Hassan, "RELAP5/MOD3 Post-testing on the MIST Facility Compared to RELAP5/MOD2," *Winter Meeting of the American Nuclear Society, San Francisco, CA, November 1991.*

The analysis of reactor systems involves testing and experimentation using physical and numerical simulations. The multiloop Integral Systems Test (MIST) facility was redesigned to do physical simulations of pressurized water reactor (PWR) transients. The RELAP5/MOD3 thermal-hydraulic analysis code was used to numerically model the MIST facility for a small-break loss-of-coolant accident (SBLOCA), as simulated in test 3109AA. RELAP5/MOD3 was used for the transient simulation in order to make a comparison with RELAP5/MOD2 transient predictions previously calculated. An improved steam generator nodalization was implemented for the MOD3 calculations to simulate once-through steam generator phenomenon occurring on the secondary side. Data calculated by the code were obtained over a period of time starting at the initialization of the break and ending 80 minutes afterwards. These data were then compared with the information predicted by the MOD2 calculations and experimental information obtained during the actual test of the MIST facility.

T. J. Boucher, *Quick Look Report for Semiscale MOD-2C Test S-FS-2,* EGG-SEMI-6827, March 1985.

Results of a preliminary analysis of the first test performed in the Semiscale MOD-2C Steam Generator Feedwater and Steam Line Break (FS) experiment series are presented. Test S-FS-2 simulated a pressurized water reactor transient initiated by a double-ended offset shear of a steam generator main steam line upstream of the flow restrictor. Initial conditions represented normal "hot-standby" operation. The transient included an initial 600 second period in which only automatic plant protection systems responded to the initiating event. This period was followed by a series of operator actions necessary to stabilize the plant at conditions required to allow a natural circulation cooldown. The test results provided a measured evaluation of the effectiveness of the automatic responses in minimizing primary system overcooling and operator actions in stabilizing the plant. Test data were compared with the RELAP5/ MOD2 computer code and also provided a basis for comparison with other tests in the series of the effects of break size on primary overcooling and primary-to-secondary heat transfer.

T. J. Boucher and D. G. Hall, *Quick Look Report for Semiscale MOD-2C Test S-FS-6*, EGG-SEMI-7022, September 1985.

Results of a preliminary analysis of the third test performed in the Semiscale MOD-2C Steam Generator Feedwater and Steam Line Break (FS) experiment series are presented. Test S-FS-6 simulated a pressurized water reactor transient initiated by a 100% break in a steam generator bottom feedwater line downstream of the check valve. With the exception of primary pressure, the initial conditions represented the initial conditions used for the CE System 80 Final Safety Analysis Report (FSAR) Appendix 15B calculations. The transient included an initial 600-s period in which only automatic plant protection systems responded to the initiating event. This period was followed by a series of operator actions necessary to stabilize the plant and a subsequent operator controlled natural circulation cooldown and depressurization with upper heat void collapse method investigations. The test results provided a measured evaluation of the effectiveness of the automatic responses in minimizing primary system overpressurization and operator actions in stabilizing and recovering the plant. Test data were compared with the RELAP5/MOD2 computer code and also provided a basis for comparison with other tests in the series of the effects of break size on primary overpressurization and primary-to-secondary heat transfer.

C. R. Brain, "Post-test Analysis of Natural Circulation, Flow Coastdown, and Pressurizer Spray Tests in a Large Four Loop PWR Using RELAP5/MOD2," *Technical Committee/Workshop on Computer Aided Safety Analysis, Berlin German Democratic Republic, April 1990*, IAEA-TC-560.03, Central Electricity Generating Board, Barnwood, Gloucester United Kingdom.

This paper describes a series of calculations performed by the Central Electricity Generating Board to assess the RELAP5/MOD2 input dataset for the Sizewell B nuclear power plant. Given the similarities of Sizewell B with the Westinghouse Standardized Nuclear Unit Power Plant System plants, results of commissioning tests from Callaway nuclear power plant and Wolf Creek were used in the validation process. Results presented demonstrate a good agreement between test data and calculations.

C. R. Brain, *Assessment of Subcooled Boiling Model Used in RELAP5/MOD2 (Cycle 36.05, Version E03) Against Experimental Data,* National Nuclear Power, G. D/PE-N729, February 1989.

In order to test the ability of RELAP5/MOD2 to describe sub-cooled nucleate boiling under conditions similar to those anticipated during intact circuit fault scenarios in pressurized water reactors the code has been assessed against results of high pressure sub-cooled boiling experiments reported in literature. It is concluded that RELAP5/MOD2 can be applied with reasonable confidence to the prediction of sub-cooled boiling void fraction for conditions expected during PWR intact circuit faults.

I. Brittain, "U. K. Experience with *TRAC-PF1/MOD1 and RELAP5/MOD2," 13th Water Reactor Safety Information Meeting, Washington, D.C., October 1985,* United Kingdom Atomic Energy Authority.

The United Kingdom has been using versions of TRAC and RELAP5 for best-estimate pressurized water reactor loss-of-coolant accident analysis for a number of years. In the preconstruction phase of the Sizewell B plant, the codes were used to provide an independent assessment that could be compared with the evaluation model-based safety case. It is generally agreed that advanced code calculations will play a more direct role in the pre-operation phase of the project, though the precise use has not yet been determined. The author's experience with RELAP5/MOD2 is limited, and consists of collaboration in

some of the code development preliminary work in analyzing Loss-of-Fluid Test small break tests, and carrying out small break sensitivity studies for the Sizewell B plant.

I. Brittain and S. N. Aksan, *OECD-LOFT Large Break LOCA Experiments: Phenomenology and Computer Code Analyses*, PSI-Bericht Nr.72 AEEW-TRS- 1003, August 1990, United Kingdom Atomic Energy Authority Atomic Energy Establishment, Winfrith, United Kingdom, and Paul Scherrer Institute, Villigen, Switzerland.

Large break loss-of-coolant accident data from the Loss-of-Fluid Test (LOFT) are a very important part of the world database. This paper describes the two double-ended cold leg break tests LP-02-6 and LP-LB-1 carried out within the Organization for Economic Cooperation and Development (OECD) LOFT Program. Tests in LOFT were the first to show the importance of both bottom-up and top-down quenching during blowdown in removing stored energy from the fuel. These phenomena are discussed in detail, together with the related topics of the thermal performance of nuclear fuel and its simulation by electric fuel rod simulators, and the accuracy of cladding external thermocouples. The LOFT data are particularly important in the validation of integral thermal hydraulic codes such as TRAC and RELAP5. Several OECD partner countries contributed analyses of the large break tests. Results of these analyses are summarized and some conclusions are given.

I. Brittain, *The U. K. Contribution to Improvements in TRAC and RELAP5,* March 1990.

This paper describes the work that has been performed in the United Kingdom on the improvement of the advanced thermal-hydraulic codes TRAC-PF1 and RELAP5. This work is part of an internationally coordinated effort organized by the U. S. Nuclear Regulatory Commission via the International Code Assessment and Applications Program (ICAP). The present paper describes a new reflood model for TRAC, which includes modifications to the modeling of both the heat transfer and the hydraulics. There is also an option to calculate the quench from progression using an analytic method. The use of the present finite difference method for calculating the effects of steep axial and transverse temperature gradients in the cladding has also been investigated in some depth and has improved our understanding of the limitations of this method. Another significant improvement to the TRAC code is the development of a model to represent external thermocouples. This is important because of the central role that the LOFT experiments play in the validation of computer codes for large break LOCA analysis. The U. K. contribution to improvement of the RELAP5 code has been focused on the area of interphase drag under wet-wall conditions. Much of the work performed over the last year has been on developmental assessment, and this has led to some changes to the model. Finally, the paper describes work done to overcome problems in the RELAP5 modeling of countercurrent flow in a pressurized water reactor hot leg.

P. Brodie and P. C. Hall, *Analysis of Semiscale Test S-LH-2 Using RELAP5/MOD2,* National Power Nuclear, Barnwood, U. K., April 1992.

The RELAP5/MOD2 code is being used by National Power Nuclear Technology Division for calculating Small Break Loss of Coolant Accidents (SBLOCA) and pressurized transient sequences for the Sizewell “B” PWR. To assist in validating RELAP5/MOD2 for the above application, the code is being

used to model a number of small LOCA and pressurized fault simulation experiments carried out in integral test facilities. The present report describes a RELAP5/MOD2 analysis of the small LOCA test S-LH-2 which was performed on the Semiscale Mod-2C facility. S-LH-2 simulated a SBLOCA caused by a break in the cold leg pipework of an area equal to 5% of the cold leg flow area. RELAP5/MOD2 gave reasonably accurate predictions of system thermal hydraulic behavior but ailed to calculate the core dryout which occurred due to coolant boiloff prior to accumulator injection. The error is believed to be combinations of errors in calculating the liquid inventory in the core and steam generators, and incorrect modeling of the void fraction gradient within the core.

W. M. Bryce, *Numerics and Implementation of the U. K. Horizontal Stratification Entrainment Off-Take Model into RELAP5/MOD3,* AEA Thermal Reactor Services, Winfrith, U. K., June 1993.

This report presents the numerics and implementation details to add the same improved discharge quality correlations into RELAP5/MOD3. In light of the experience with the modified RELAP5/MOD2 code, some of the numerics has been slightly changed for RELAP5/MOD3. The description is quite detailed in order to facilitate change by some future code developer. A simple test calculation was performed to confirm the coding of the correlations implemented in RELAP5/MOD3.

J. D. Burtt, C. A. Dobbe, and P. D. Wheatley, *Advanced Test Reactor Large Break Loss-of-Coolant Accident Break Spectrum Study*, EGG-TFM-8082, April 1988.

This report documents work performed at the Idaho National Engineering Laboratory in support of the U. S. Department of Energy's safety review of the Advanced Test Reactor. Four large break loss-of-coolant transients were calculated using the RELAP5/MOD2 computer code to determine the worst transient in terms of vessel inventory loss and core cladding temperatures.

J. D. Burtt, “Development of a RELAP5/NPA Graphic Process Control Room Simulator for the Advanced Test Reactor,” *American Nuclear Society Topical Meeting on the Safety Status and Future of Noncommercial Reactors and Future of Noncommercial Reactors and Irradiation Facilities; Boise, ID, September 30 - October 4, 1990.*

This paper reports on the INEL Engineering Simulation Center which provides a modern, flexible simulation facility. One of the projects being pursued at the Center is the development of a graphics-based simulator for the Process Control Room at the Advanced Test Reactor. The key technologies used in the development of this simulator are the CRAY XMP/24 supercomputer and the new 32 bit workstations, the RELAP5 reactor systems simulation computer code, and the Nuclear Plant Analyzer. The simulator resides on a computer and the information for trainer and trainee is shown on a computer screen through a series of detailed graphic displays. The simulator is able to run in replay mode, displaying the results of previous calculations, or interactive mode, displaying a calculation while both trainer and trainee interact with the model.

J. D. Burtt and R. P. Martin, “Benchmark Analysis with RELAP5 for USNRC Simulators,” *Twenty-First Water Reactor Safety Information Meeting, Bethesda, MD, October 25-27, 1993.*

The U. S. Nuclear Regulatory Commission adopted Kemeny Commission recommendations that all nuclear plants have a plant-specific simulator for operator training. In support of this requirement a project was initiated to examine the capability of the current generation of simulator using advanced thermal-hydraulic systems codes such as RELAP5 and TRAC-B. Using the advanced systems codes as a baseline, the assessment of simulators is a unique role for such codes. While these advanced systems codes play an integral part in the safety analysis of nuclear power plant systems, their inherent uncertainty and limits must be qualified before meaningful conclusions can be deduced. One of the difficulties inherent in this type of procedure is that some models in simulator codes are capable of better performance than the best-estimate codes because they have been specifically designed for a given process or system. Since the advanced systems codes involve building mathematical models from a set of “building blocks”, some detail may be lost from complex subsystems. As part of the project, RELAP5 models of Pressurized Water Reactor simulators at the U. S. Nuclear Commissions's Technical Training Center have been developed and sets of transients performed for comparison with simulator predictions. One such model was for the Washington Nuclear Project Unit 1 Simulator. Thermal-hydraulic analyses of five hypothetical accident scenarios were performed with the RELAP5/MOD3 computer code, then the same scenarios performed on the simulator, prior to a scheduled upgrade with S3 Technology's RETACT simulator code. The five transients performed were (1) loss of AC power, (2) small break loss-of-coolant accident with loss of AC power, (3) stuck open pressurizer safety valve, (4) main steamline break with steam generator tube rupture, and (5) loss of main feedwater with delay scram. Comparison of code and simulator data was performed by reviewing each transient with a team of plant analysts and experienced reactor operators. The initial finding show that both the simulators and the system codes modeling needs improvement. Comparisons show that the simulator does not model natural circulation and that leak rate guidelines are in error. The comparisons also showed that the RELAP5/MOD3 model's Integrated Control System modeling did not follow load reduction as it should have. Finally, comparisons also found some phenomenon for which there was no immediate “right or wrong” answer; additional analysis is required. The conclusion drawn from this preliminary study is that simulator benchmarking is and should be a dynamic, interactive task with benefits provided to both simulator engineers and to plant systems analysts.

R. A. Callow, *Thermal-Hydraulic Response and Iodine Transport During a Steam Generator Tube Rupture*, EGG-EAST-8264, October 1988.

Recent reanalyses of the offsite dose consequences following a steam generator tube rupture have identified a possible nonconservatism in the original Final Safety Analysis Report analyses. Post-trip uncovery of the top of the steam generator U-tubes, in conjunction with a break near the U-tube top, could lead to increased iodine release because of a reduced “scrubbing” of the iodine in the primary break fluid by the steam generator secondary liquid. To evaluate this issue, analyses were performed at the Idaho National Engineering Laboratory. The RELAP5 computer code was used to conduct an analysis of the Surry plant to determine whether the post-trip steam generator secondary mixture level was sufficient to maintain continuous coverage of the U-tubes. The RELAP5 result was supported by a hand calculation. Additional RELAP5 analyses were conducted to determine the magnitude of iodine release for a steam generator tube rupture. Two sensitivity studies were conducted. The amount of iodine released to the atmosphere was strongly dependent on the assumed value of the partition coefficient. The assumption of

steam generator U-tube uncovery on a collapsed liquid level basis following reactor trip had a minor effect on the amount of released iodine.

D. L. Caraher, *RELAP5 Simulations of a Hypothetical LOCA in Ringhals 2*, STUDSVIK-NP-87-105, September 18 1987, Swedish Nuclear Power Inspectorate, Stockholm, Studsvik Energiteknik AB, Nykoping, Sweden.

RELAP5 simulations of a hypothetical loss-of-coolant accident in Ringhals-2 were conducted to determine the sensitivity of the calculated peak cladding temperature (PCT) to Appendix K requirements. The PCT was most sensitive to the assumed model decay heat: changing from the 1979 American Nuclear Society standard to 1.2 times the 1973 standard increased the cladding temperature by 70 to 100 K. After decay heat, the two parameters that most affected the PCT were steam generator heat transfer and heat transfer lockout. The PCT was not sensitive to the assumed pump rotor condition (locked vs. coasting), nor was it sensitive to a modest amount (5 - 10%) of steam generator tube plugging.

D. L. Caraher and R. Shumway, *Enhanced RELAP5/MOD3 Surface-to-Surface Radiation Model*, EGG-EAST-8442, February 1989.

The RELAP5/MOD2 computer program lacked the ability to do surface-to-surface radiation heat transfer. A model was developed by Intermountain Technologies Incorporated that allowed any of the regular RELAP5 heat slabs to radiate to any other heat slab. However, the model only allowed for one set of communicating heat slabs. The model has been enhanced to allow for up to 99 sets of communicating heat slabs. In addition, the slabs can now be modified upon restart. The view factors and surface insolvents must be specified by the user. Absorbing fluid between the two surfaces is not considered except that the user can choose the void fraction below which the radiation model is inactive. To verify that the model was properly accounting for radiant energy transfer, the Gota radiation test was repeated with excellent results. The updates have been exercised on the Cray at the Idaho National Engineering Laboratory.

D. L. Caraher and R. W. Shumway, *Metal-Water Reaction and Cladding Deformation Models for RELAP5/MOD3*, EGG-EAST-8557, June 1989.

A model for calculating the reaction of zirconium with steam according to the Cathcart-Pawel correlation has been incorporated into RELAP5/MOD3. A cladding deformation model that computes swelling and rupture of the cladding according to the empirical correlations for Powers and Meyer has also been incorporated into RELAP5/MOD3. This report gives the background of the models, documents their implementation into the RELAP5 subroutines, and reports the developmental assessment done on the models.

D. L. Caraher, "Air-Water Hydraulics Modeling for a Mark-22 Fuel Assembly with RELAP5: Part 2," *1991 RELAP5/TRAC-B International Users Seminar, Baton Rouge, LA, November 4-8, 1991.*

The RELAP5/MOD2.5 computer program is being used to simulate hypothetical loss-of-coolant accidents in the Savannah River Site (SRS) production reactors. Because of their unique geometry and

thermal-hydraulic design these reactors pose a significant challenge to the simulation capability of RELAP5. This paper focuses on one aspect of the LOCA simulations, air-water flow through the fuel assemblies. Improvements to the RELAP5 code's treatment of wall friction and interfacial friction are described.

K. E. Carlson, "Developmental Assessment of RELAP5/MOD3 Using the Semiscale Natural Circulation Tests," *Transactions of the American Nuclear Society Winter Meeting, Washington D. C., November 11-15, 1990.*

This paper documents the simulation of the Semiscale natural circulation (SNC) tests SNC-01, SNC-03, and SNC-04 using RELAP5/MOD3 for developmental assessment. The main purpose of applying MOD3 to these tests is to show the code's capability of single- and two-phase natural circulation, reflux heat transfer, and countercurrent flow with the improved models. A brief description of the Semiscale test facility and RELAP5/MOD3 system model is given, followed by a description of some code results and analysis of the phenomena simulated. The RELAP5/MOD3 systems analysis code has simulated the Semiscale natural circulation tests. In general, the code calculations are in good agreement with the measured data at the higher PCS and steam generator mass inventories. Additionally, the code performance at the higher PCS mass inventories is an improvement over previous RELAP5/MOD2 calculations of this problem.

K. E. Carlson et al., *Developmental Assessment of the Multidimensional Component in RELAP5 for Savannah River Site Thermal Hydraulic Analysis,* EGG-EAST-9803, July 1992.

This report documents ten developmental assessment problems which were used to test the multidimensional component in RELAP5/MOD2.5, Version 3w. The problems chosen were a rigid body rotation problem, a pure radial symmetric flow problem, and r-H symmetric flow problem, a fall problem, a rest problem, a basic one-dimensional flow test problem, a gravity wave problem, a tank draining problem, a flow through the center problem, and coverage analysis using PIXIE. The multidimensional code calculations are compared to analytical solutions and one-dimensional code calculations. The discussion section of each problem contains information relative to the code's ability to simulate these problems.

K. E. Carlson et al., *Theory and Input Requirements for the Multidimensional Component in RELAP5 for Savannah River Site Thermal Hydraulic Analysis,* EGG-EAST-9878, July 1992.

This report documents the theory and input requirements for the multidimensional component in RELAP5/MOD2.5, Version 3w. The equations in Cartesian and cylindrical coordinates are presented as well as the shallow water terms. The implementation of these equations is then discussed. Finally, the constitutive models and input requirements are then described.

H. R. Carter and J. R. Gloudemans, "MIST Test Results," *14th Water Reactor Safety Information Meeting, Gaithersburg, MD, October 27, 1986.*

The Multiloop Integral System Test (MIST) is a part of the Integral System Test (IST) Program being sponsored by the U. S. Nuclear Regulatory Commission, Electric Power Research Institute, Babcock & Wilcox (B&W) Owners Group, and B&W. The IST Program is obtaining experimental integral system data for the B&W designed nuclear steam supply system. The data acquired from MIST will be used to benchmark system computer codes, such as RELAP5 and TRAC, against simulated small break loss-of-coolant plant transients. The paper describes the design of MIST, the test program, and the test results obtained.

J. C. Chapman, *Comparison of a RELAP5/MOD2 Posttest Calculation to the Data During the Recovery Portion of a Semiscale Single-Tube Steam Generator Tube Rupture Experiment*, NUREG/CR-4749, EGG-2474, September 1986.

This report compares a RELAP5 posttest calculation of the recovery portion of the Semiscale MOD-2B Test S-SG-1 to the test data. The posttest calculation was performed with the RELAP5/MOD2/36.02 code without updates. The recovery procedure that was calculated mainly consisted of secondary feed and steam using auxiliary feedwater injection and the atmospheric dump valve of the unaffected steam generator (the steam generator without the tube rupture). A second procedure was initiated after the trends of the secondary feed and steam procedure had been provided by two trains of both the charging and high-pressure injection systems. The Semiscale MOD-2B configuration is a small scale (1/1705), nonnuclear, instrumented model of a Westinghouse four-loop pressurized water reactor power plant. S-SG-1 was a single-tube, cold-side, steam generator tube rupture experiment. The comparison of the posttest calculation and data included comparing the (a) general trends and the driving mechanisms of the responses, (b) the phenomena, and (c) the individual responses of the main parameters.

J. C. Chapman, *Quick Look Report for Semiscale MOD-2C Experiment S-NH-3*, EGG-RTH-7232, May 1986.

The preliminary results of the Semiscale Test S-NH-3 are presented in this report. S-NH-3 was conducted in the Semiscale facility (MOD-2C configuration) on January 15, 1986. S-NH-3 simulated a small break loss-of-coolant accident in a pressurized water reactor with an accompanying failure of the high-pressure injection emergency core cooling system. The simulated break represented a shear of a small diameter cold leg penetration equivalent to 0.5% of the cold leg flow area. The test was initiated by opening a quick opening break valve. Only the automatic safety features (with the exception of the high-pressure injection) were simulated until the heater rod peak cladding temperature (PCT) reached 811 K (1,000°°F). The intact loop pump was then restarted at its initial speed. No other simulated operator actions were taken until the PCT reached 950 K (1,250°°F). The atmospheric dump valves were then opened. The test was stopped after the primary pressure was reduced to the low-pressure injection system set pressure, 1.38 MPa (200 psia). The results presented include a description of the test response, a discussion of the main mechanisms that drove the response, and a comparison of the test data of the pretest planning calculation performed using RELAP5/MOD2.0.

J. C. Chapman and R. A. Callow, *Emergency Response Guide-B ECCS Guideline Evaluation Analyses for N-Reactor*, EGG-EAST-8385, July 1989.

The Idaho National Engineering Laboratory conducted two Emergency Core Cooling System (ECCS) analyses for Westinghouse Hanford. Both analyses will assist in the evaluation of proposed changes to the N-Reactor Emergency Response Guide-B ECCS guideline. The analyses were a sensitivity study for reduced ECCS flow rates and a mechanistically determined confinement steam source for a delayed ECCS loss-of-coolant accident (LOCA) sequence. The reduced ECCS sensitivity study established the maximum allowable reduction in ECCS flow as a function of time after core refill for a large break LOCA sequence in the N-Reactor. The maximum allowable ECCS flow reduction is defined as the maximum flow reduction for which ECCS continues to provide adequate core cooling. The delayed ECCS analysis established the liquid and steam break flows and enthalpies during the reflood of a hot core following a delayed ECCS injection LOCA sequence. A simulation of a large, hot leg manifold break with a seven minute ECCS injection delay was used as a representative LOCA sequence. Both analyses were performed using the RELAP5/MOD2.5 transient computer code.

T. R. Charlton, E. T. Laats, and J. D. Burtt, "RELAP5 Based Engineering Simulator," *SCS Eastern Multiconference, Nashville, TN, April 23-29, 1990.*

The INEL Engineering Simulation Center was established in 1988 to provide a modern, flexible, state-of-the-art simulation facility. This facility and two of the major projects which are part of the simulation center, the Advance Test Reactor (ATR) engineering simulator project and the Experimental Breeder Reactor II (EBR-II) advanced reactor control system, have been the subject of several papers in the past few years. Two components of the ATR engineering simulator project RELAP5 and the Nuclear Plant Analyzer (NPA), have recently been improved significantly. This paper will present an overview of the INEL Engineering Simulation Center, and discuss the RELAP5/MOD3 and NPA/MOD1 codes, and specifically how they are being used at the INEL Engineering Simulation Center. It will provide an update on the modifications to these two codes and their application to the ATR engineering simulator project, as well as, a discussion on the reactor system presentation, control system modeling, two phase flow and heat transfer modeling. It will also discuss how these two codes are providing desktop, stand-alone reactor simulation.

T. Chataing, H. Nakamura, and Y. Kukita, "Code Analysis of Multidimensional Phenomena in a ROSA-IV/LSTF Experiment Simulating a Loss of Residual Heat Removal Event During PWR Mid-loop Operation," *Joint International Conference on Nuclear Engineering, San Francisco, CA, March 21-24, 1993.*

A comparative analysis was performed with two computer codes, CATHARE 2 and RELAP5/MOD3, for a ROSA-IV/LSTF experiment that simulated a Westinghouse-type PWR loss-of-residual heat removal (RHR) event during a mid-loop operating after reactor shutdown. Both codes predicted the overall trend of the experimental results qualitatively well until the loop seal clearing occurred. The analysis pointed out an important effect of nodalization on the prediction of multidimensional natural circulation phenomena which were observed experimentally in such components as the core, downcomer, cold leg and

steam generator secondary side. These phenomena, as well as the heat transfer between the core and the downcomer regions through the core barrel, had major influences on the transient pressure and temperature responses in the primary and secondary systems where fluids were nearly stagnant.

D. Chauliac et al., *Post-Test Analysis with RELAP5/MOD2 of ROSA-IV/LSTF Natural Circulation Test ST-NC-02*, CEA Centre d'Etudes Nucleaires de Fontenay-aux-Roses, 92, France, and Japan Atomic Energy Research Institute, Tokyo Japan, October 1988.

Results of posttest analysis for the ROSA-IV/LSTF natural circulation experiment ST-NC-02 are presented. The experiment consisted of many steady-state stages registered for different primary inventories. The calculation was done with RELAP5/MOD2/36.00. Discrepancies between the calculation and the experiment are (a) the core flow rate is overestimated at inventories between 80% and 95%, and (b) the inventory at which dryout occurs in the core is also greatly overestimated. The causes of these discrepancies were studied through sensitivity calculations. The following key parameters are pointed out: the interfacial friction and form loss coefficients in the vessel riser, the steam generator (SG) U-tube multidimensional behavior, and the interfacial friction in the SG inlet plenum and in the pipe below.

K. F. Chen, "RELAP5/MOD3 Code Assessment with Flow Instability Testing of an Annular Geometry Fuel Assembly," *National Conference and Exposition on Heat Transfer, Atlanta, GA, August 8-11, 1993.*

RELAP5/MOD3 was assessed with data obtained from flow excursion tests in an annular geometry test assembly to show that the code can model the thermal-hydraulic behavior of New Production Reactor-Heavy Water Reactor (NPR-HWR) fuel assemblies. The flow excursion tests were upflow tests conducted using an electrically heated full-scale model of a Savannah River Site (SRS) fuel assembly. Unpowered and powered steady-state tests, power ramp tests, and simulated loss-of-coolant accident tests were run. This assessment indicates that the single-phase thermal-hydraulic predictions of RELAP5/MOD3 agree with the measurements. RELAP5/MOD3 underestimates the power required for the onset of flow instability.

T. H. Chen and T. J. Boucher, "Semiscale Steam Line Break Transient Test Predictions with the RELAP5/MOD2 Code," *American Nuclear Society Winter Meeting, San Francisco, CA, November 1985, Transactions of the American Nuclear Society, Vol. 50, pp. 327-329*.

Although ruptures of steam generator main steam lines are not expected to occur often in pressurized water reactor (PWR) plants, the potential consequences of these events necessitate their examination. Steam line break transients can lead to overcooling and possibly repressurization of the primary coolant system. This phenomenon, termed pressurized thermal shock, poses a threat to the integrity of the PWR pressure vessel. This paper presents the analysis of test data and compares the data with the pretest calculations results for the first Semiscale steam line break test (S-FS-2) performed in the Semiscale MOD-2C facility. Most of the primary and secondary responses including the overcooling and depressurization of the primary system were reasonably well predicted by RELAP5/MOD2, although a difference was noted in the primary coolant temperature.

N. C. J. Chen, P. T. Williams, and G. L. Yoder, *Thermal Hydraulic Response of the Advanced Neutron Source Reactor to Piping Breaks Near the Core Region,* 1992.

This paper describes the application of the RELAP5 thermal-hydraulic code to a highly subcooled, plate type reactor typical of many research and production reactor systems. The specific system modeled is the latest design of the Advanced Neutron Source Reactor (ANSR). A discussion of the model as well as the results from several loss-of-coolant accident (LOCA) scenarios is included. The results indicate that this system responds to these accidents by a very rapid depressurization (over a few milliseconds) followed by a pressure recovery due to fluid inertia. In addition, the effect of including a gas pressurized accumulator in the system is addressed. The results show that tracking the pressure response of the system over these short time scales will be a key to accurately predicting the thermal response of the core of the reactor. Further, the break time scale as well as the time scale of the thermal response of the core, presently treated conservatively, will be additional important areas of study.

N. C. J. Chen et al., *Validation and Verification of RELAP5 for Advanced Neutron Source Accident Analysis: Part I, Comparisons to ANSDM and PRSDYN Codes,* December 1993.

As part of verification and validation, the Advanced Neutron Source reactor RELAP5 system model was benchmarked by the Advanced Neutron Source dynamic model (ANSDM) and PRSDYN models. RELAP5 is a one-dimensional, two-phase transient code, developed by the Idaho National Engineering Laboratory for reactor safety analysis. Both the ANSDM and PRSDYN models use a simplified single-phase equation set to predict transient thermal-hydraulic performance. Brief descriptions of each of the codes, models, and model limitations were included. Even though comparisons were limited to single-phase conditions, a broad spectrum of accidents were benchmarked; a small loss-of-coolant accident (LOCA), a large LOCA, a station blackout, and a reactivity insertion accident. The overall conclusion is that the three models yield similar results if the input parameters are the same. However, ANSDM does not capture pressure wave propagation through the coolant system. This difference is significant in very rapid pipe break events. Recommendations are provided for further model improvements.

R. D. Cheverton, “Overview of the Integrated Pressurized Thermal-Shock (IPTS) Study,” Oak Ridge National Laboratory, *U. S./Japanese Specialized Topical Workshop on Pressurized Thermal Shock, Rockville, MD, September 26-28, 1990.*

By the early 1980's (PTS)-related, deterministic, vessel-integrity studies sponsored by the U. S. Nuclear Regulatory Commission (NRC) indicated a potential for failure of some PWR vessels before design end of life, in the event of a postulated severe PTS transient. In response, the NRC established screening criteria, in the form of limiting values of the reference nil-ductility transition temperature (RTNDT), and initiated the development of a probabilistic methodology for evaluating vessel integrity. This latter effort, referred to as the Integrated Pressurized Thermal-Shock (IPTS) Program, included development of techniques for postulating PTS transients, estimating their frequencies, and calculating the probability of vessel failure for a specific transient. Summing the products of frequency of transient and conditional probability of failure for each of the many postulated transients provide a calculated value of the frequency of failure. The IPTS Program also included the application of the IPTS methodology to three

U. S. PWR plants (Oconee-1, Calvert Cliffs-1, and H. B. Robinson-2) and the specification of a maximum permissible value of the calculated frequency of vessel failure. Another important purpose of the IPTS study was to determine, through application of the IPTS methodology, which design and operating features, parameters, and PTS transients were dominant in affecting the calculated frequency of failure. The scope of the IPTS Program included the development of a probabilistic fracture-mechanics capability, modification of the TRAC and RELAP5 thermal-hydraulic codes, and development of the methodology for estimating the uncertainty in the calculated frequency of vessel failure.

S. Cho, N. Arne, B. D. Chung, and H. J. Kim, *Assessment of the CCFL Model of RELAP5/MOD3 Against Simple Vertical Tubes and Rob Bundle Tests: International Agreement Report,* Korea Inst. of Nuclear Safety, Taejon Korea, June 1993.

The CCFL model used in RELAP5/MOD3 version 5m5 has been assessed against simple vertical tubes and bundle tests performed at a facility of Korea Atomic Energy Research Institute. The effect of changes in tube diameter and nodalization of tube section were investigated. The roles of interfacial drags on the flooding characteristics are discussed. Differences between the calculation and the experiment are also discussed. A comparison between model assessment results and the test data showed that the calculated value lay well on the experimental flooding curve specified by user, but the pressure jump before onset of flooding was not calculated.

J. H. Choi, S. Y. Lee, and K. I. Han, "Core Channel Modeling for PWR LOCA Analysis," *Third International Topical Meeting on Nuclear Power Plant Thermal Hydraulics and Operations, Seoul, Korea, November 1988*, Korea Advanced Energy Research Institute.

Flow distributions are predicted in average and hot channels of the reactor core during small break loss-of-coolant accidents (LOCAs). The effects that crossflow between two channels has on LOCA analysis results are also estimated based on RELAP5/MOD2 calculations. Generally, it has been accepted that a single average channel is sufficient for small break LOCA core hydraulic modeling. However, based on these calculation results, hot channel modeling (two-channel modeling) is necessary to guarantee more reliable and conservative results.

H. R. Choi, Y. H. Ryu, and K. I. Han, "Impact of Safety Injection Flow Rate on Small Break LOCA Behavior," *Third International Topical Meeting on Nuclear Power Plant Thermal Hydraulics and Operations, Seoul, Korea, November 1988,* Korea Advanced Energy Research Institute.

This paper investigates the effect of change in safety injection flow rate on small break loss-of-coolant accident behavior. A series of calculations for different break sizes is performed using RELAP5/MOD2 based on conservative initial and boundary conditions. Also studied is the effect of break size changes with a given safety injection flowrate assumption to determine the limiting break size. From the calculation results, it is concluded that the degree of the peak clad temperature (PCT) increase is mostly affected by the duration of core heatup. Higher safety injection flow tends to shorten the duration of the core heatup, which results in a decrease of PCT for a given break size. It is also noted that the limiting break size tends to increase as the safety injection flowrate increases while reducing PCT.

G-H. Chou, S. Tzing, and L-Y. Lia, *Assessment of RELAP5/MOD2 Using Semiscale Intermediate Break Loss-of-Coolant Experiment S-IB-3,* Institute of Nuclear Energy Research, Lung-Tan, Taiwan, June 1992.

This report presents the results of the RELAP5/MOD2 assessment utilizing a Semiscale intermediate break of loss-of-coolant experiment S-IB-3. Comprehensive analysis with RELAP5/MOD2 is performed to predict the transient thermal-hydraulic responses of the experiment. Test S-IB-3 is a 21.7%, communicative cold leg break LOCA experiment using Semiscale Mod-2A facility in 1982, for the principal objective to provide reference data for comparison of Semiscale test results to LOBI facility B-R1M test results. Through extensive comparison between test data and best-estimate RELAP5 calculations, the capabilities of RELAP5/MOD2 to predict the intermediate break LOCA accident were assessed. Emphasis was located on the capability of the code to calculate core level depression and break flow rate during system blowdown, pump suction liquid seals phenomena, and temperature excursions behavior, etc., throughout the whole experiment. Besides, some sensitivity studies involving the effect of steam generator secondary side pressure boundary, adjustment of two-phase discharge coefficient, intact loop pump coastdown behavior, and some interesting studies regarding break flow etc., were also investigated in this report.

H. Chow and V. H. Ransom, "A Simple Interphase Drag Model for Numerical Two-Fluid Modeling of Two-Phase Flow Systems," *Transactions of the American Nuclear Society 2nd Proceedings of Nuclear Thermal-Hydraulics, New Orleans, LA, June 1984, Vol. 46.*

The interphase drag model that has been developed for RELAP5/MOD2 is based on a simple formulation having flow regime maps for both horizontal and vertical flows. The interphase drag model is based on a conventional semi-empirical formulation that includes the product of drag coefficient, interfacial area, and relative dynamic pressure. The drag coefficient and interfacial area density are functions of the component orientation, flow regime, and local fluid properties. The flow regime maps contain those regimes of importance in light water reactor safety transient analysis and are based on recent research results that have been obtained in the U. S. Nuclear Regulatory Commission's Safety Research Program. The interphase drag model is implemented in the RELAP5/MOD2 light water reactor transient analysis code and has been used to simulate a variety of separate effects experiments to assess the model accuracy. Results are presented and discussed from three of these simulations: the General Electric Company small vessel blowdown experiment, Dukler and Smith's countercurrent flow experiment, and a Westinghouse Electric Company FLECHT-SEASET forced reflood experiment.

B-D. Chung, H-J. Kim, and Y-J. Lee, *Assessment of RELAP5/MOD2 Code Using Loss of Offsite Power Transient Data of KNU (Korea Nuclear Unit) No. 1 Plant*, April 1990

This report presents a code assessment study based on a real plant transient that occurred on June 9, 1981 at the KNU #1 (Korea Nuclear Unit Number 1). KNU #1 is a two-loop Westinghouse PWR plant of 587 MWe. The loss of offsite power transient occurred at the 77.5% reactor power with 0.5% hour power ramp. The real plant data were collected from available on-line plant records and computer diagnostics. The transient was simulated by RELAP5/MOD2/36.05 and the results were compared with the plant data

to assess the code weaknesses and strengths. Some nodalization studies were performed to contribute to developing a guideline for PWR nodalization for the transient analysis.

M. Coney and I. Brittain, "TRAC and RELAP5 Code Development within the U. K.," *16th Water Reactor Safety Information Meeting, Gaithersburg, MD, March 1989,* (United Kingdom Atomic Energy Authority, Winfrith, England.

The United Kingdom (UK) is using the TRAC-PF1 code to assess licensing calculations for large break loss-of-coolant accidents (LOCAs) in pressurized water reactors. The RELAP5 code is being used for small LOCAs and pressurized transients. The UK has participated in the International Code Assessment and Applications Program (ICAP) with respect to the assessment of TRAC-PF1/MOD1 and RELAP5/MOD2, and some work is still ongoing in this area. Since January 1988, the UK has also been collaborating with other ICAP members on the Code Improvement Plan, which seeks to remedy some of the code deficiencies identified in the assessment work. The contribution to the Code Improvement Plan is in the three areas. The largest effort is directed at the problem of post-critical heat flux heat transfer and quenching. Although it is hoped that the proposed improvements will be adopted for both codes, the UK effort is aimed at implementation in the TRAC code, since this is seen mainly as a large LOCA phenomenon. The second area of UK involvement is that of interphase drag under wet wall conditions. The main purpose of this work is to obtain improved predictions of voidage and level swell in rod bundles, particularly during small break LOCAs. The UK implementation is therefore aimed at RELAP5 for this case. The third area is the implementation of an improved offtake model to make more accurate predictions of the flow and quality from a junction or break in a horizontal pipe (e.g., the PWR hot leg), where stratified conditions might exist. The paper describes the work in progress in the UK relating to these three areas.

S. Cooper, *Analysis of LOFT Test L5-1 Using RELAP5/MOD2,* Nuclear Electric plc, Barnwood, U.K., May 1993.

RELAP5/MOD2 is being used by Technology Division for the calculation of certain small break loss-of-coolant accidents (SBLOCA) and pressurized transients in the Sizewell B PWR. To assist in validating RELAP5/MOD2 for the above application, the code is being used to model a number of small LOCA and pressurized fault simulation experiments carried out in integral test facilities. The present report describes a RELAP5/MOD2 analysis of an intermediate break LOCA test in the LOFT facility. This test discussed in this report was designed to simulate the rupture of a single 14-inch diameter accumulator injection line in a commercial PWR with a 25% break in the broken loop cold leg. Early in the transient the pumps were tripped and the HPIS injection initiated; towards the end of the transient, accumulator and LPIS injection began. RELAP5/MOD2 gave reasonably accurate predictions of the system thermal-hydraulic behavior but failed to accurately calculate the core dryout which occurred due to boiloff prior to accumulator injection. The error is due to the failure to calculate the correct core void distribution during this period of the transient. A separate calculation using the RELPIN code using hydraulic data from the RELAP5 analysis give significantly improved predictions of the core dryout. However, the peak clad

temperature was underpredicted, it is believed that the error is due to the fact that the core liquid inventory in this boildown was overpredicted in the RELAP5/MOD2 calculation.

M. G. Coxford and P. C. Hall, *Analysis of the THETIS Boildown Experiments Using RELAP5/MOD2*, Central Electricity Generating Board, Barnwood, United Kingdom, July 1989.

To test the ability of RELAP5/MOD2 to model two-phase mixture level and fuel rod heat transfer when the core has become partially uncovered, posttest calculations have been carried out of a series of boildown tests in the AEEW THETIS out-of-pile test facility. This report describes the comparison between the code calculations and the test data. Excellent agreement is obtained with mixture level boildown rates in tests at pressures of 40 bar and 20 bar. However, at pressures below 10 bars, the boildown rate is considerably overpredicted. A general tendency for RELAP5/MOD2 to overpredict void fraction below the two-phase mixture level is observed and is traced to defects in the interphase drag models within the code. The heatup of exposed rods above the two-phase mixture level is satisfactorily calculated by the code. The results support the use of RELAP5/MOD2 for analysis of high-pressure core boildown events in pressurized water reactors.

M. G. Coxford, C. Harwood, and P. C. Hall, *RELAP5/MOD2 Calculation of OECD LOFT Test LP-FW-01,* National Power Nuclear, Barnwood, U. K., April 1992.

RELAP5/MOD2 is being used by GDCD for calculation of certain small break loss-of-coolant accidents and pressurized transients in the Sizewell “B” PWR. To test the ability of RELAP5/MOD2 to model the primary feed-and-bleed recovery procedure following a complete loss-of-feedwater event, posttest calculations have been carried out of OECD LOFT Test LP-FW-01. This report describes the comparison between the code calculations and the test data. It is found that although the standard version of RELAP5/MOD2 gives a reasonable prediction of the experimental transient, the long term pressure history is better calculated with a modified code version containing a revised horizontal stratification entrainment model. The latter allows an improved calculation of entrainment of liquid from the hot leg into the surge line. RELAP5/MOD2 is found to give a more accurate simulation of the experimental transient than was achieved in previous U. K. studies using RETRAN-02/MOD2.

J. M. Cozzuol, *Loss-of-Pumping Accident in Savannah River L-Reactor*, EGG-EAST-8273, October 1988.

An analysis of a loss-of-pumping accident has been performed using a RELAP5 model of the Savannah River L-Reactor plant. The analysis showed that the loss-of pumping accident transient was characterized by an early process system cooldown resulting from reactor trip, followed by a heatup and rapid expulsion of process system coolant once pump availability was lost. Approximately 25,000 kg of coolant left the process system through the supplementary pressure relief system flow path during the period of expulsion. The expulsion of coolant led to a much earlier dryout and heatup of reactor fuel than would be expected from a simple boiloff. Cladding temperature in the peak power region of the core reached 600 ^{o}C by about 750 seconds.

J. M. Cozzuol and C. B. Davis, *Description of the Two-Loop RELAP5 Model of the L-Reactor at the Savannah River Site*, EGG-EAST-8449, December 1989.

A two-loop RELAP5 input model of the L-Reactor at the Savannah River Site (SRS) was developed to support thermal hydraulic analysis of SRS reactors. The model was developed to economically evaluate potential design changes. The primary simplifications in the model were in the number of loops and the detail in the moderator tank. The six loops in the reactor were modeled with two loops, one representing a single-loop and the other representing five combined loops. The model has undergone a quality assurance review. This report describes the two-loop model, its limitations, and quality assurance.

W. G. Craddick et al., "Peer Review of RELAP5/MOD3 Documentation," *Transactions of the Twenty-First Water Reactor Safety Information Meeting, Bethesda, MD, October 25-27, 1993.*

A peer review was performed on a portion of the documentation of the RELAP5/MOD3 computer code. The review was performed in two phases. The first phase was a review of Volume III, Developmental Assessment Problems, and Volume IV, Models and Correlations. The reviewers for this phase were Dr. Peter Griffith, Dr. Yassin Hassan, Dr. Gerald S. Lellouche, Dr. Marino di Marzo, and Mr. Mark Wendel. The second phase was a review of Volume VI, Quality Assurance of Numerical Techniques in RELAP5/MOD3. The reviewers for the second phase were Mr. Mark Wendel and Dr. Paul T. Williams. Both phases used the NRC's "Charter for Evaluation of RES Code Documentation" as a guide for the reviews. Some additional review criteria for Volume VI were included that addressed adequacy of the documentation of the numerical techniques. While not unanimous in this regard, most of the reviewers felt that Volume III was well written and organized. However, the documentation has several significant deficiencies when compared to the criteria for acceptance defined in NUREG-1230 for documentation to be used to support the code scaling, applicability and uncertainty (CSAU) evaluation process. Modifications in several key areas would be required before the document could meet those criteria. A summary of the reviewers' major recommendations is provided: 1. All code assessment activities should be performed with a frozen version of the code. 2. A validation plan should be completed. This plan would set forth the logical framework for testing the code. This would lead to a comprehensive set of assessment cases which would demonstrate comprehensive adequacy. 3. Where code results do not match experimental data, more discussion should be offered that details the reasons for the discrepancy. Identified code deficiencies should be evaluated and their impact on the code results assessed. 4. The description of code limitations should be expanded and scaling effects should be addressed. 5. Whenever code features are disabled, the impact on accuracy and code applicability should be discussed. 6. Guidelines for users for performing similar analyses should be included in the report, particularly where difficulties are encountered with code models. The reviewers' reactions to Volume IV varied from strongly positive (Griffith) to rather negative (Lellouche). The majority felt that the description of what was in the code was fairly clear and understandable, though there is room for improvement. Certainly correction of numerous typographical errors is needed. There were definite differences in the reviewers' reactions to limitations in the description of the applicability and justification of the codes' models and correlations, some judging these to be clear deficiencies in the documentation and other more inclined to attribute them to limitations in the code itself or in our knowledge of the physical phenomena. A summary of the

reviewers' major recommendations is provided: 1. Adopt a consistent set of symbols and nomenclature throughout the volume. 2. Provide additional supporting references, justification and explanation for flow regime maps, for applications of correlations and models beyond their original data bases and for modifications made in implementing correlations and models. 3. Provide an explanation for the limits placed on variables and coefficients, particularly in Chapter 4, Section 1. 4. Enhance the readability of Chapters 6 and 7, either by better defining the FORTRAN used or by adopting an alternate presentation strategy. The major conclusions reached in the review of Volume VI are: 1. Generally speaking, while all criteria are addressed, specific areas require revision and elaboration to meet documentation requirements. 2. Specifically, Chapters 4 and 5 do not meet the requirement of being "sufficiently detailed," and there is insufficient linkage between the theoretical studies presented in Chapter 4 and the computational experiments presented in Chapter 5. 3. Although Volume VI is organized in a logical fashion, significant problems exist with regard to readability due to awkward sentence structure, grammatical and typographical errors, and nomenclature inconsistency. 4. Consideration should be given to retitling the volume or including sections to address the formal requirements of quality assurance. Following from these conclusions, the set of recommendations summarized below was identified: 1. Include more detailed information in Chapters 4 and 5; specifically, (1) address two theoretic issues when applying Lax's Equivalence Theorem to algorithms for two-phase flow, (2) provide linkage between Chapters 4 and 5, and (3) include geometry, and boundary and initial conditions (or at least a brief summary and appropriate reference) for the computational experiments in Chapter 5. 2. Adopt a consistent nomenclature throughout the volume 3. Enhance the readability of the volume by correcting numerous grammatical and typographical errors and revising awkward sentence structure.

F. Curca-Tivig, *Modeling of the Steam-Water Countercurrent Flow in the Rewetting and Flooding Phase After Loss-of-coolant Accidents in Pressurized Water Reactors*, Stuttgart University, Germany, Inst. fuer Kemenergetik and Energiesysteme, January 1990.

A new interphase momentum exchange model has been developed to simulate the refill/reflood phase after LOCAs. Special phenomena of steam/water- countercurrent flow like limitation or onset of downward-water penetration have been modeled and integrated into a flooding model. The interphase momentum exchange model interconnected with the flooding model has been implemented into the advanced system code RELAP5/MOD1. The new version of this code can now be utilized to predict the hot leg emergency core cooling (ECC) injection for German PWRs. The interfacial momentum transfer model developed includes the interphase frictional drag, the force due to virtual mass and the momentum due to interphase mass transfer. The modeling of the interfacial shear or drag accounts for the effects of phase and velocity profiles. The flooding model predicts countercurrent flow limitation, onset of water penetration and partial delivery. The flooding correlation specifies the maximum down flow liquid velocity in case of countercurrent flow through flow restrictions for a given vapor velocity.

F. Curca-Tivig, *Assessment of RELAP5/MOD3/V5M5 Against the UPTF Test No. ll (Countercurrent Flow in PWR Hot Leg),* Siemens AG Unternehmensbereich KWU, Erlangen, Germany, May 1993

Analysis of the UPTF Test No. 11 using the “best-estimate” computer code RELAP5/MOD3/ Version 5M5 is presented. Test No. 11 was a quasi-steady-state, separate effect test designed to investigate the conditions for countercurrent flow of steam and saturated water in the hot leg of a PWR. Without using the code's new countercurrent flow limitation (CCFL) model, RELAP5/MOD3/V5M5 overestimated the mass flow rate of back down flowing water up to 35% (1.5 MPa runs) and 43% (0.3 MPa runs). This is the most obvious difference to RELAP5/MOD2, which did not allow enough countercurrent flow. From the point of view of performing plant calculations this is certainty an improvement, because the new junction-based CCFL option could be used to restrict the flows to a flooding curve defined by a user-supplied correlation. Very good agreement with the experimental data for 1.5 MPa which are relevant for SBLOCA reflux condensation conditions, could be obtained using the code's new CCFL option in the middle of the inclined part (riser) of the hot leg. Using the same CCFL correlation for the simulation of 0.3 MPa test series (typical for reflood conditions), the code underestimated by 44% the steam mass flow rate at which complete liquid carry over occurs. An unphysical result was received using a CCFL correlation of the Wallis type with the intercept C = 0.644 and the slope m = 0.8. The unphysical prediction is an indication of possible programming errors in the CCFL model of the RELAP5/MOD3/5M5 computer code.

A. J. D’Arcy, *Summary Description of the RELAP5 Koeberg-1 Simulation Model,* November 1990.

The main features of the RELAP5 code and the model are summarized. The model has been quality-assured in accordance with a QA program used in the Reactor Theory Group of the Atomic Energy Corporation of SA Ltd. The RELAP5 code is based on a nonhomogeneous, nonequilibrium model for the two-phase system that is solved by a fast, partially-implicit numerical scheme. The objective of the development effort from the outset has been to produce a code that includes important first-order effects necessary for accurate prediction of system transients, but is sufficiently simple and cost-effective so that parametric or sensitivity studies are possible. The code includes many generic component models from which general systems can be simulated. Special process models are included for effects such as form losses, flow at an abrupt area change, branching, choked flow, boron tracking and noncondensable gas. The RELAP5 modelling and computational aspects covered are: hydrodynamic models, constitutive package, special process models, and user conveniences.

F. D’Auria, M. Mazzini, F. Oriolo, and G. M. Galassi, *Assessment of RELAP5/MOD2 and RELAP5/ MOD1-EUR Codes on the Basis of LOBI-MOD2 Test Results*, Commission of the European Communities, Luxembourg, October 1989.

The present report deals with an overview of the application RELAP5/MOD2 and RELAP5/MOD1-EUR codes to tests performed in the LOBI/MOD2 facility. The work has been carried out in the frame of a contract between Dipartimento di Costruzioni Meccaniche e Nucleari (DCMN) of Pisa University and ECE. The Universities of Roma, Pisa, Bologna and Palermo and the Polytechnic of Torino performed the post-test analysis of the LOBI experiment under the supervision of DCMN. In the report the main outcomes from the analysis of the LOBI experiments are given with the attempt to identify deficiencies in the modeling capabilities of the used codes.

F. D'Auria and G. M. Galassi, "Characterization of Instabilities During Two-Phase Natural Circulation in PWR Typical Conditions," *Fourth International Topical meeting of Nuclear Reactor Thermal-Hydraulics (NURETH-4), Proceedings Vol. 1.,* pp. 445-464, U. Mueller, K. Rehme, and K. Rust (eds.), Karlsruhe, Germany, Braun, 1989.

Strong oscillations in fluid velocities and densities have been measured in the LOBI test facility during natural circulation experiments. A sort of "siphon condensation" occurs in the U-tubes of steam generators when primary side mass inventory reaches roughly 75% of the initial value. The paper deals with the characterization of the phenomenon considering flooding and condensation dynamics of U-tubes; RELAP5/MOD2 calculations made it possible to select system parameters affecting the oscillation characteristics. In this context an attempt has been made to evaluate the possibility of instability occurrence in real plant situations.

F. D'Auria, G. M. Galassi, and M. Schindler, "Assessment of RELAP5/MOD2 Code on the Basis of Experiments Performed in LOBI Facility," *Seminar on the Commission Contribution to Reactor Safety Research, Varese, Italy, November 20-23, 1989.*

The present paper deals with the assessment of RELAP/MOD2 code on the basis of experiments performed in the PWR simulator, LOBI/MOD2 facility available at the European Research Center of Ispra (Italy). In particular the significant experience gained in the analysis of two small break LOCA, a steam generator tube rupture, a natural circulation, and four transients are discussed.

F. D'Auria and G. M. Galassi, *Relevant Results Obtained in the Analysis of LOBI/MOD2 Natural Circulation Experiment A2-77A,* Pisa University, Italy, April 1992.

The present document describes the activities carried out by Pisa University to assess the RELAP5/ MOD2 performance in the application to the natural circulation test A2-77A performed in the LOBI/ MOD2 facility. Sensitivity calculations have been performed in this context, with the attempt to distinguish the code limitations from the uncertainties of the measured conditions. The characterization of instabilities in two-phase natural circulation and the evaluation of the user effect upon the code results are special goals achieved in the frame of the A2-77A analysis.

F. D'Auria and P. Vigni, "Application of RELAP5/MOD3 to the Evaluation of Isolation Condenser Performance," *Joint International Conference on Nuclear Engineering, San Francisco, CA, March 21-24, 1993.*

This paper deals with the application of RELAP5/MOD3 (8J Version) to an experiment performed in PIPER-ONE facility properly modified to test the thermal-hydraulic characteristics of an isolation condenser-type system, and the capability of that code to simulate it. RELAP5 is a well known code widely used at the University of Pisa in the past seven years. PIPER-ONE is an experimental facility simulating a General Electric BWR-6 with volume and height scaling rations of 1/2,200 and 1/1, respectively. The isolation condenser type system consists in a once-through heat exchanger and, in order to reproduce qualitatively and phenomenologies expected for the isolation condenser in the simplified BWR (SBWR), it

is immersed in a pool with water at ambient temperature and installed at about 10 m above the core. The code predicts well the overall thermo-hydraulic behavior, but discrepancies have been identified in predicting local phenomena occurring in the pool and in the isolation condenser.

C. B. Davis, *A Comparison of RELAP5 and TRAC LOCA Calculations for the K-14.1 Charge at SRS*, EGG-EAST-8608, August 1989.

Calculations of a loss-of-coolant accident (LOCA) in the K-Reactor at the Savannah River Site were performed using the RELAP5 computer code. The results of the RELAP5 calculation were then compared with a TRAC calculation previously performed by Savannah River Laboratory. The calculations represented the early (flow instability) portion of a LOCA initiated by a double-ended guillotine break in the plenum inlet piping in the K-Reactor. A RELAP5 model of the K-Reactor was developed to perform the calculations. The model represented all six external loops and represented the reactor vessel in a three-dimensional manner. The RELAP5 and TRAC results were compared to illustrate and understand differences and similarities between calculations performed with independent computer codes and input models. The variation between the independent calculations provided an indication of the uncertainty in the calculated results with both codes. Results of the comparison were generally favorable because differences between the calculated results for the water plenum and tank bottom pressures were generally less than the values currently assumed in Savannah River's FLOWTRAN uncertainty studies.

C. B. Davis, *Pump Cavitation in L-Reactor During a LOCA Initiated by a Large Break in a Plenum Inlet Line*, EGG-EAST-8148, June 1988.

This study analyzed the effects of cavitation on the response of the L-Reactor at Savannah River during a loss-of-coolant accident (LOCA) initiated by a large break in a plenum inlet line. Cavitation models were developed and incorporated into a RELAP5/MOD2 model of L-Reactor. The types of cavitation modeled include elbow cavitation and pump cavitation. The RELAP5 cavitation models were benchmarked against separate-effects and system data. The RELAP5 model of the L-Reactor was benchmarked against steady-state data and LOCA calculations performed with other computer codes. The results of the benchmark comparisons were generally favorable. Calculations of a LOCA initiated by a 200% plenum inlet break were performed at pre-incident core power levels of 1,125, 1,400, 1,800, and 2,250 MW. Based on a best-estimate analysis and an average river water temperature of 18°^{o}C, the power required to cause cavitation was shown to be in excess of current operating powers. The analysis showed that even though cavitation would occur during a LOCA if the initial core power was high enough, a catastrophic reduction in assembly flow would not occur because of system feedback, which would limit the effects of cavitation.

C. B. Davis, *Davis-Besse Uncertainty Study*, NUREG/CR-4946, EGG-2510 August 1987.

The uncertainties of loss-of-feedwater transient calculations at Davis-Besse Unit 1 were determined to address concerns of the U. S. Nuclear Regulatory Commission relative to the effectiveness of feed-and-bleed cooling. Davis-Besse Unit 1 is a pressurized water reactor of the raised-loop Babcock and Wilcox

design. A detailed, quality-assured RELAP5/MOD2 model of Davis-Besse was developed at the Idaho National Engineering Laboratory. The model was used to perform an analysis of the loss-of-feedwater transient that occurred at Davis-Besse on June 9, 1985. A loss-of-feedwater transient followed by feed-and-bleed cooling was also calculated. The evaluation of uncertainty was based on the comparisons of calculations and data, comparisons of different calculations of the same transient, sensitivity calculations, and the propagation of the estimated uncertainty in initial and boundary conditions to the final calculated results.

C. B. Davis, C. D. Fletcher, and S. B. Rodriguez, *Benchmarking the RELAP5 L-Reactor Model with Savannah River Reactor Test Data*, EGG-EAST- 8336, April 1989.

A quality-assured RELAP5 input model of the L-Reactor at the Savannah River Plant (SRP) was developed to support the analysis of a loss-of-coolant accident. The RELAP5/MOD2.5 computer code and the L-Reactor model were benchmarked against SRP data to demonstrate their applicability for thermal-hydraulic analysis of SRP reactors. The code and model were benchmarked against data from several different reactor system tests including the 1985 AC Process Flow Tests, the 1983 Cavitation Tests, the 1987 AC Pump Trip Tests, and the 1970 Starved Pump Tests. Results of the benchmark calculations were favorable, yielding confidence in the capability of RELAP5 and the L-Reactor model to determine system response during normal and transient operation, including a loss-of-coolant accident.

D. L. DeForest and Y. A. Hassan, "RELAP5/MOD2 Implementation on Various Mainframes Including the IBM and SX-2 Supercomputer," *Transactions of the American Nuclear Society, 55*, 1987, pp. 709-710.

The results obtained with RELAP5/MOD2/36.04 from various simulations are of interest to many utilities involved in licensing and evaluating nuclear power plants. Typically, there is a limit in the number and scope of simulation because of computational time, expense, and availability restraints. Thus, efforts have been made to install RELAP5 on additional computer systems that improve speed and/or availability. From the original Control Data Corporation (CDC) version of RELAP5/MOD2 came the operational version on the CRAY supercomputers. The purpose of this work is to install and benchmark the RELAP5/MOD2 code on an Amdahl V8/460 (IBM look-alike) and IBM 3090-200E with vector facility located at Texas A&M University, and the NEC SX-2 supercomputer located at the Houston Area Research Center. The SX-2 is the first Japanese supercomputer to be installed in the United States. At Texas A&M, the latest version of RELAP5/MOD2/36.04 has been installed for the first time in the United States on an IBM environment and on the NEC SX-2 supercomputer. Results from benchmark runs demonstrated capabilities comparable to installation on a CDC mainframe and the CRAY supercomputers, respectively.

M. DeSalve, B. Panella, D. Raviolo, "Analysis of the ATWS Type Depressurization Tests Through the Pressurizer Relief Line of the LV400 Loop by the RELAP5/MOD2 Code," *Proceedings of the Second International Symposium on Multiphase Flow and Heat Transfer,* 1991.

This paper investigates the thermal-hydraulics during the depressurization transients following the opening of a valve in the pressurizer relief line of the Politecnico di Torino loop LV400 while the test section is still electrically heated (ATWS type depressurization transients). The main objective of the

research is to validate the models and correlations of the RELAP5/MOD2 system code, that is largely used in nuclear safety assessment of the power plants.

M. De Valminck and P. Deachutter, *Assessment Study of RELAP5/MOD2 Cycle 36.05 Based on the DOEL-4 Reactor Trip of November 22, 1985,* TRACTEBEL, Brussels, Belgium, March 1992.

This report presents a code assessment study for RELAP5/MOD2/CYCLE 36.05 based on a plant transient that occurred at the Belgian DOEL-4 nuclear power plant. High level in steam generator G led to a turbine trip followed by reactor trip. This test was performed as part of the first cycle testing program on November 22, 1985, and most important plant parameters were recorded on a frozen version of the RELAP5/MOD2/ Cycle 36.05 code was performed to qualify the plant input data deck for this plant and assess the code potential for simulating such transient.

M. J. Dillistone and C. G. Richards, *Modeling Vertical Counter-Current Flow Limitation Using RELAP5/ MOD2*, PWR/HTWG/P(88)606, AEEW-M2512, May 1988, AEE Winfrith, United Kingdom.

An experiment to investigate countercurrent flow limitation in a vertical pipe has been modeled using the thermal-hydraulics code RELAP5/MOD2/36.05. The RELAP5 code has been used to generate a curve representing the maximum liquid downflow in a pipe for a given steam upflow, known as the flooding curve. This curve is compared with experimental data. The code overpredicts liquid downflows by more than an order of magnitude, and this is shown to be mainly from an undocumented code model (the Reverse Void Profile model) that reduces interphase friction when fluid density increases with height in a vertical section. With the model removed, the code still overpredicts liquid downflows at lower gas flow rates because it assumes slug flow in the channel when annular flow is appropriate (the cocurrent flow-regime transition criterion applied is inappropriate in a countercurrent flow situation). The code reproduces the experimental flooding-curve well at all gas flow rates if it is forced to assume annular flow in the channel. The effect of varying the number of mesh cells representing the test-section is also discussed. The code also predicts greater liquid downflows than are theoretically allowed by the balance between interphase drag and gravity forces. This is due in part to the upstream donoring of voids at junctions, and in part to another component of the Reverse Void Profile model.

M. J. Dillistone, *Analysis of the UPTF Separate Effects Test 11 (Steam-Water Counter-Current Flow in the Broken Loop Hot Leg) Using RELAP5/MOD2*, AEA Technology, Winfrith, United Kingdom, June 1992.

RELAP5/MOD2 predictions of countercurrent flow limitation in the UPTF hot leg separate effects Test (test 11) are compared with the experimental data. The code underestimates, by a factor of more than three, the gas flow an the gas flow necessary to prevent liquid runback from the steam generator. This is shown to be due to an oversimplified flow-regime map which does not allow the possibility of stratified flow in the hot leg riser. The predicted countercurrent flow is also shown to depend, wrongly, on the depth of liquid in the steam generator plenum. The same test is also modeled using a version of the code in which stratified flow in the riser is made possible. The gas flow needed to prevent liquid runback is then predicted quite well, but at all lower gas flows the code predicts that the flow is completely unrestricted, i.e., liquid flows between full flow and zero flow are not predicted. This is shown to happen because the code cannot

calculate correctly the liquid level in the hot leg, mainly because of a numerical effect of upwind donoring in the momentum flux terms of the code's basic equations. It is also shown that the code cannot model the considerable effect of the ECCS injection pipe (which runs inside the hot leg) on the liquid level.

R. A. Dimenna and D. L. Caraher, "RELAP5 Modeling of a Savannah River Site Reactor," *1990 Joint RELAP5 and TRAC-BWR International User Seminar, Chicago, IL, September 17-21, 1990.*

The RELAP5/MOD2.5 computer program is being used to simulate hypothetical loss-of-coolant accidents in the SRS production reactors. Because of their unique geometry and thermal-hydraulic design these reactors pose a significant challenge to the simulation capability of RELAP5. This paper focuses on one aspect of the LOCA simulations, air-water flow through the fuel assemblies. Deficiencies in the RELAP5 treatment of wall friction and interfacial fraction are described along with proposals to extend these models to encompass the Savannah River Site reactor fuel assembly hydraulics. A modeling technique to allow RELAP5 to reproduce experimentally observed water flow at the fuel assembly inlet is also described. Thermal-hydraulic system analysis in support of Savannah River Site reactor restart is being performed with a modified version of RELAP5/MOD2.5. This paper gives an overview of the Savannah River Site reactor system, the RELAP5 input models developed for the analysis, and the specific phenomena with which the code is having difficulty. The need for code development to address plenum phenomena, air/water behavior, fuel assembly behavior, and degraded pump performance is motivated in terms of the system response to a large break loss-of-coolant accident. Results of benchmark calculations show both the adequacy of the basic models and the need for a better representation of phenomena that are beyond the typical range of RELAP5 application.

R. A. Dimenna, "RELAP5 Code Development and Assessment at the Savannah River Site," *1991 RELAP5/TRAC-B International Users Seminar; Baton Rouge, LA, November 4-8, 1991.*

Over the past year, the focus of RELAP5 use at the savannah River Site has been on code applications to reactor accidents having a direct bearing on setting power limits, with a lesser emphasis on code development. In the applications task, RELAP5/MOD2.5 has been used to predict the thermal-hydraulic system response to large break loss-of-coolant accidents and to provide boundary conditions for a detailed fuel assembly code. This paper describes the significant phenomena affecting the ability of RELAP5 to perform the system calculations, the benchmarking work completed to validate the application of RELAP5 to Savannah River Site reactors, and the results of the system calculations. This paper will also describe the code and model development effort and will describe briefly certain significant gains.

R. A. Dimenna, Z. H. Qureshi, and A. L. Boman, *RELAP5/MOD3 Analysis of a Heated Channel in Downflow,* 1993.

The onset of flow instability (OFI) is a significant phenomenon affecting the determination of a safe operating power limit in the Savannah River Site production reactors. Tests performed at Columbia University for a single tube with uniform axial and azimuthal heating have been analyzed with RELAP5/NPR, Version 0, a version of RELAP5/MOD3. The tests include water flow rates from 3.2×10^{-4} -$2.1 \times 10^{-}$

^{3} m^3/s (5 - 33 gpm), Reynolds numbers from 30,000 - 40,000, and surface heat fluxes from 0 - 3.2 x 10^6 w/ m^2 (0 - 1,000,000 Btu/hr - ft^2). Pressure drop versus flow rate curves were mapped for both fixed pressure boundary conditions and fixed flow boundary conditions. RELAP5/MOD3 results showed fair agreement with data for both types of boundary conditions, and good internal consistency between calculations using the two different types of boundary conditions. Under single-phase unheated conditions, the code overpredicted the pressure drop by 22 - 34%. Under single-phase heated conditions, the overprediction increased to as much as 55%. For those tests where two-phase conditions are observed at the channel exit, RELAP5 predicted lower flows than seen the tests before voiding occurred.

C. A. Dobbe and R. Chambers, *Analysis of a Station Blackout Transient for the Bellefonte Pressurized Water Reactor*, EGG-NTP-6704, October 1984.

Analyses of a station blackout transient in support of the U. S. Nuclear Regulatory Commission's Severe Accident Sequence Analysis Program are presented. The RELAP5/MOD2 and SCDAP/MOD1 computer codes were used to calculate the effects of concurrent loss of offsite power, onsite power, and emergency feedwater during full power operation on the Bellefonte Babcock and Wilcox designed pressurized water reactor. The results were calculated from transient initiation through severe core damage. Results provide insight into timing significant events and the severity of core damage.

C. A. Dobbe, P. D. Bayless, and R. Chambers, "Analysis of Feedwater Transient Initiated Sequences for the Bellefonte Nuclear Plant," *13th Water Reactor Safety Information Meeting, Washington, D.C., October 1985*, EGG-M-21285.

Four feedwater transient-initiated sequences for the Bellefonte Nuclear Plant were analyzed. The sequences were evaluated to determine if core damage would result. Calculations were performed with the RELAP5/MOD2 computer code until either cladding oxidation or long term core cooling was obtained. The analyses show that a total loss of power and auxiliary feedwater (TMLB' sequence) results in core damage. The addition of a single high-pressure injection pump provided adequate core cooling.

W. E. Driskell and R. G. Hanson, "Summary of ICAP Assessment Results for RELAP5/MOD2," *Nuclear Safety, 30*, 3 1989.

The International Code Assessment and Applications Program (ICAP) encompasses bilateral agreements between the U. S. Nuclear Regulatory Commission and fourteen nations and/or multinational organizations. One purpose of ICAP is to provide assessments of the RELAP5 computer code to identify code deficiencies and draft user guidelines. To date, twenty assessment studies have been provided by ICAP assessing the RELAP5/MOD2 code. Of these, ten have been reviewed and evaluated. Based on these ten studies, three code deficiencies were identified and four user guidelines drafted. The code deficiencies are listed and the user guidelines stated. A summary of the information considered and the procedure used in the identification of the code deficiencies and the formulation of user guidelines is given.

R. B. Duffey, "The Analysis of Plant Transients Defines Safety Margins and Accident Management Strategies," *Third International Topical Meeting on Nuclear Power Plant Thermal Hydraulics and Operations, Seoul, Korea*, December 1988.

Developments in system analysis and simulation are described that cover the application to training, uncertainty determination, survivability, and accident management.

J. S. Duffield et al., "JRC activities on the assessment of DRUFAN/ATHLET and CATHARE," *Seminar on the Commission Contribution to Reactor Safety Research, Varese, Italy, November 20-24, 1989, pp. 155-165*

The computer codes CATHARE and DRUFAN/ATHLET, along with similar codes (e.g., RELAP5 and TRAC) represent the state of the art for best-estimate, nonequilibrium, one-dimensional transient analysis of the coolant circuits of a PWR under abnormal or accident conditions. Assessment of codes commonly consists of predicting and analyzing the results of two different types of experiments; separate effect tests are experiments with a fairly simple geometry designed to look at only one or two phenomena. In these tests it is possible to assess whether the constitutive laws in the code can adequately describe the phenomena under study. Integral tests have a different aim. They are a scaled down model of reactor plant and experiments in them model a postulated accident and the mitigating actions. There are generally so many interacting phenomena involved in integral tests that we cannot tell how well particular models in the code are performing; any discrepancy between measurement and prediction can usually have several explanations. Nevertheless if a test is predicted reasonably well it is of value because it gives confidence in reactor calculations where the same phenomena should be occurring, analysis of deviations from experimental results indicate which phenomena, under which conditions, we should be studying more closely, and sensitivity studies indicate how much change to a parameter is needed to significantly change the results. Most of the assessment work at Ispra concentrated on a series of small break LOCA tests carried out in the LOBI loop. Here we present a summary in order to draw some conclusions as to the performance of the codes.

J. Eriksson, *Assessment of RELAP5/MOD2 Cycle 36.04 Against FIX-II Guillotine Break Experiment No. 5061*, July 1989, Swedish Nuclear Power Inspectorate, Stockholm, Sweden.

The FIX-II guillotine break experiment No. 5061 has been analyzed using RELAP5/MOD2 (frozen version 36.04). Four different calculations were carried out to study the sensitivity of initial coolant mass, junction options, and break discharge line nodalization. The differences between the calculations and the experiment have been quantified over intervals in real time for a number of variables available from the measurements during the experiment. The break mass flows were generally underpredicted at the same time the depressurization rate was overpredicted.

J. Eriksson, *ICAP Assessment of RELAP5/MOD2, Cycle 36.04 Against LOFT Small Break Experiment L3-6*, STUDSVIK/NP-37/128, Project 850026, Reference 13.3-717/84, November 3, 1987, Swedish Nuclear Power Inspectorate.

The LOFT small break experiment L3-6 has been analyzed as part of Sweden's contribution to the International Code Assessment and Applications Program. Three calculations, of which two were sensitivity studies, were carried out. Two quantities were varied: the content of secondary side fluid and the feed water valve closure, and the two-phase characteristics of the main pumps. All three predictions agreed reasonably well with most of the measured data. The sensitivity calculations resulted only in marginal improvements. The predicted and measured data are compared on plots, and their differences are quantified over intervals in real time.

J. Eriksson, *ICAP Assessment of RELAP5/MOD2 Cycle 36 Against FIX-II Split Break Experiment No. 3027*, NUREG/IA-0005, September 1986.

The FIX-II split break experiment No. 3027 has been analyzed using the RELAP5/MOD2 (frozen version 36). Four different prediction calculations were carried out to study the sensitivity of various parameters to changes of break discharge, initial coolant mass, and passive heat structures. The differences between the calculations and the experiment have been quantified over intervals in real time for a number of variables available from the measurements during the experiment. The core inventory expressed by the differential pressure over the core was generally underpredicted. Dryout times were generally overpredicted, probably because of differences in the used dryout correlation.

J. Eriksson, *Assessment of RELAP5/MOD2, Cycle 36.04 Against LOFT Small Break Experiment L3-5,* Swedish Nuclear Power Inspectorate, Nykoping, Sweden, March 1992.

The LOFT small break experiment L3-5 has been analyzed using the RELAP5/MOD2 code. The code version used, Cycle 36.04, is a frozen version of the code. Three calculations were carried out in order to study the sensitivity to changes of steam generator modeling and of core bypass flow. The differences between the calculations and the experiment have been quantified over intervals in real time for a number of variables available from the experiment.

G. Exsoel, L. Perneczky, and L. Szabados, *Adaptation of RELAP5/MOD2 Code,* Hungarian Academy of Sciences, Budapest, Hungary, Central Research Inst. for Physics, February 1991.

The third IAEA Standard Problem Exercise is based on the SPT-3 experiment on the PMK-NVK simulator test facility with loss of primary coolant to the secondary circuit through a 3.8 mm break on the upper head of the steam generator collector. A short summary on the IAEA Standard Problem activity is presented, and a posttest analysis of IAEA-SPE-3 with the RELAP5/MOD2 safety code is described.

L. Fabjan, S. Petelin, B. Mavko, O. Gortnar, and I. Tiselj, *Analysis of Containment Parameters During the Main Steam Line Break with the Failure of the Feedwater Control Valves,* July 1992.

U. S. Nuclear Regulatory Commission (NRC) information notice 91-69: 'Errors in Main Steam Line Break Analyses for Determining Containment Parameters' shows the possibility of an accident which could lead to beyond-design containment pressure and temperature. Such an accident would be caused by the continuation of feedwater flow following a main stream line break (MSLB) inside the containment.

The Krsko power plant already experienced problems with main feedwater control valves. For that reason, analysis of MSLB has been performed taking into account continuous feedwater addition scenario and different containment safety systems capabilities availability. Steam and water released into the containment during MSLB was calculated using the RELAP5/MOD2 computer code. The containment response to MSLB was calculated using the CONTEMPT-LT/028 computer code. The results indicated that the continuous feedwater flow following a MSLB could lead to beyond-design containment pressure. The peak pressure and temperature depend on isolation time for main- and auxiliary-feedwater supply. In the case of low boron concentration injection, the core recriticality is characteristic for these type of accidents. It was concluded that the presented analysis of MSLB with continuous feedwater addition scenario is the worst case for containment design.

C. P. Fineman, "RELAP5/MOD2 Code Assessment for the Semiscale Mod-2C Test S-LH-1," *Proceedings of the International ANS/ENS Topical Meeting on Thermal Reactor Safety, San Diego, CA, February 2, 1986*.

RELAP5/MOD2,36.02 was assessed using data from Semiscale MOD-2C Experiment S-LH-1. The major phenomena that occurred during the experiment were calculated by RELAP5/MOD2, although the duration and magnitude of their effect on the transient were not always well calculated. Areas defined where further work was needed to improve the RELAP5 calculation include (a) the system energy balance, (b) core interfacial drag, and (c) the heat transfer logic rod dryout criterion.

J. E. Fisher, *Savannah River Site Reactor Hardware Design Modification Study*, EGG-EAST-8984, April 1990.

A study was completed to assess the merits of proposed design modifications to the Savannah River Site reactors. The evaluation was based on the responses calculated by the RELAP5 systems code to double-ended guillotine break loss-of-coolant accidents. The three concepts evaluated were (a) elevated plenum inlet piping with a guard vessel and clamshell enclosures, (b) closure of both rotovalves in the affected loop, and (c) closure of the pump suction valve in the affected loop. Each concept included a fast reactor shutdown (to 65% power in 100 ms) and a 2-s AC pump trip. For the elevated piping design, system recovery was predicted for breaks in the plenum inlet, or pump suction piping response to the pump discharge break location did not show improvement compared to the present system configuration. The rotovalve closure design improved system response to plenum inlet or pump discharge breaks; recovery was not predicted for pump suction breaks. The pump suction valve closure design demonstrated system recovery for all break locations. The elevated piping design performance during pump discharge breaks would be improved with the addition of a DC pump trip in the affected loop. Valve closure design performance for a break location in the short section of piping between the reactor concrete shield and the pump suction valve would benefit from the clamshell enclosing that section of piping.

C. D. Fletcher et. al., *RELAP5 Thermal-Hydraulic Analyses of Pressurized Thermal Shock Sequences for the H. B. Robinson Unit Pressurized Water Reactor*, NUREG/CR-3977, EGG-2341, April 1985.

Thermal-hydraulic analyses of fourteen hypothetical pressurized thermal shock (PTS) scenarios for the H. B. Robinson, Unit 2 pressurized water reactor were performed at the Idaho National Engineering Laboratory using the RELAP5 computer code. The scenarios, which were developed at Oak Ridge National Laboratory (ORNL), contain significant conservatisms concerning equipment failures, operator actions, or both. The results of the thermal-hydraulic analyses presented here, along with additional analyses of multidimensional and fracture mechanics effects, will be used by ORNL, integrator of the PTS study, to assist the U. S. Nuclear Regulatory Commission in resolving the PTS unresolved safety issue.

C. D. Fletcher and M. A. Bolander, *N-Reactor RELAP5 Model Benchmark Comparisons*, EGG-TFM-7938, December 1988.

This report documents work performed at the Idaho National Engineering Laboratory (INEL) in support of Westinghouse Hanford Company safety analyses for the N-Reactor. The portion of the work reported here includes comparisons of RELAP5/MOD2-calculated data with measured plant data for (a) a plant trip reactor transient from full power operation, and (b) a hot dump test performed before plant startup. These qualitative comparisons are valuable because they show the capabilities of the RELAP5/MOD2 models and code to simulate operational and blowdown transients in N-Reactor.

C. D. Fletcher and M. A. Bolander, *Analysis of Instrument Tube Ruptures in Westinghouse 4-Loop Pressurized Water Reactors*, NUREG/CR-4672, EGG-2461, December 1986.

A recent safety concern for Westinghouse 4-loop pressurized water reactors (PWRs) is that, because of a seismic event, instrument tubes may be broken at the flux mapping seal table, resulting in an uncovering and heatup of the reactor core. This study's purpose was to determine the effects on findings of a similar 1980 study if certain test variables changed. A 1980 U. S. Nuclear Regulatory Commission analysis of PWR behavior used the RELAP4/MOD7 computer code to determine the effects of breaking instrument tubes at the reactor vessel lower plenum wall. The 1986 study discussed here was performed using RELAP5/MOD2, an advanced best-estimate computer code. Separate effects analyses investigated instrument tube pressure loss, heat loss, and tube nodalization effects on break flow. Systems effects analyses (a) investigated the effects of changing the break location from the reactor vessel to the seal table, (b) compared RELAP4/MOD7 and RELAP5/MOD2 results for an identical transient, (c) verified a key finding from the 1980 analysis, and (d) investigated instrument tube ruptures in the Zion-1 PWR using best-estimate boundary and initial conditions. The outcome of these analyses permits adjustment of the 1980 analysis findings for instrument tube ruptures at the seal table and indicates the best-estimate response of a Westinghouse PWR to the rupture of 25 small instrument tubes at the seal table.

C. D. Fletcher and R. A. Callow, *Long Term Recovery of Westinghouse Pressurized Water Reactors Following a Large Break Loss-of-Coolant Accident*, EGG-TFM-7993, February 1988.

The U. S. Nuclear Regulatory Commission recently identified a possible safety concern. Following the reflood phase of a large break loss-of-coolant accident in pressurized water reactors of Westinghouse design, long term cooling of the reactor core may not be ensured. The specific concern is that the loop seals in the reactor coolant pump suction piping will refill with liquid and the post-reflood steam production may

depress the liquid levels in the downflow sides of the loop seals, causing a corresponding depression of the core liquid levels and a possible fuel rod heatup in the upper core region. This report documents analyses of the loop seal/core level depression issue performed at the Idaho National Engineering Laboratory. The analyses employed both a static-balance, steady-state approach, and a transient system approach. The static balance approach involved the development and application of a simple computer program to investigate the reactor coolant system behavior during quiescent post-reflood conditions. The transient systems approach involved investigating this behavior using the RELAP5/MOD2 computer code and a comprehensive RELAP5 model of a Westinghouse pressurized water reactor. Two approaches were used because of uncertainties regarding the actual reactor coolant system behavior during the post-reflood period. The static balance analysis indicated a fuel rod heatup is possible, but not to temperatures that could damage the fuel rods. The transient systems analysis indicated boiling and condensation-induced flow oscillations, not considered in the static balance analysis, are sufficient to prevent fuel rod heatup. The report includes discussions of analysis uncertainties and recommendations for further work in this area.

C. D. Fletcher and C. M. Kullberg, *Break Spectrum Analysis for Small Break Loss-of-Coolant Accidents in a RESAR-3S Plant*, NUREG/CR-4384, EGG-2416, September.

A series of thermal-hydraulic analyses were performed to investigate phenomena during small break loss-of-coolant accident sequences in a RESAR-3S pressurized water reactor. The analysis included simulations of plant behavior using the TRAC-PF1 and the RELAP5/MOD2 computer codes. A series of calculations was performed using both codes for different break sizes. The results shown here were used by the U. S. Nuclear Regulatory Commission as an independent confirmation of similar analyses performed by Westinghouse Electric Company using another computer code.

C. D. Fletcher, R. Chambers, and M. A. Bolander, *Modeling and Simulation of the Chernobyl-4 Reactor Under Severe Accident Conditions*, EGG-SAR-7511, December 1986.

RELAP5 and SCDAP computer code models of Chernobyl-4 were assembled and applied. Plant response to a station blackout event with failure of all feedwater was considered first. Immediately following the accident this was considered a possible scenario. As information on the events at Chernobyl became more available, intermediate analyses investigated the effects of the new information on plant response during the accident. Finally, following the comprehensive release of information at the International Atomic Energy Agency expert conference in Vienna, Austria, August 25-29, 1986, an analysis was performed of the accident sequence for the five-minute period immediately preceding the plant explosion.

C. D. Fletcher, C. B. Davis, and D. M. Ogden, *Thermal-Hydraulic Analyses of Overcooling Sequences for the H. B. Robinson Unit 2 Pressurized Thermal Shock Study*, NUREG/CR-3935, EGG-2335, May 1985.

Oak Ridge National Laboratory, as part of the U. S. Nuclear Regulatory Commission's pressurized thermal shock (PTS) integration study for the resolution of Unresolved Safety Issue A49, identified overcooling sequences of interest to the H. B. Robinson PTS study. For each sequence, reactor vessel

downcomer fluid pressure and temperature histories were required for the two-hour period following the initiating event. Analyses previously performed at the Idaho National Engineering Laboratory (INEL) fully investigated a limited number of the sequences using a detailed RELAP5 model of the H. B. Robinson, Unit 2 plant. However, a full investigation of all sequences using the detailed model was not economically practical. New methods were required to generate results for the remaining sequences. Pressure and temperature histories for these remaining sequences were generated at the INEL through a process combining (a) partial-length calculations using the detailed RELAP5 model, (b) full-length calculations using a simplified RELAP5 model, and (c) hand calculations. This report documents both methods used in this process and the results. The sequences investigated contain significant conservatisms concerning equipment failures, operator actions, or both. Consequently, care should be taken in applying the results presented herein without an understanding of the conservatisms and assumptions.

C. D. Fletcher, R. Chambers, M. A. Bolander, and R. J. Dallman, "Simulation of the Chernobyl Accident," *Nuclear Engineering and Design, 105,* 2, January 1988, pp. 157-172.

An analysis of the April 26, 1986 accident at the Chernobyl l-4 nuclear power plant is presented. The peak calculated core power during the accident was 550,000 MW_t. The analysis provides insights that further understanding of the plant behavior during the accident. The plant was modeled with the RELAP5/MOD2 computer code using information available in the open literature. RELAP5/MOD2 is an advanced computer code designed for best-estimate thermal hydraulic analysis of transients in light water reactors. The Chernobyl l-4 model included the reactor kinetics effects of fuel temperature, graphite temperature, core average void fraction, and automatic regulator control rod position. Preliminary calculations indicated that the effects of recirculation pump coastdown during performance of a test at the plant were not sufficient to initiate a reactor kinetics-driven power excursion. Another mechanism, or "trigger" is required. The accident simulation assumed the trigger was recirculation pump performance degradation caused by the onset of pump cavitation. Fuel disintegration caused by the power excursion probably led to rupture of pressure tubes. To further characterize the response of the Chernobyl 1-4 plant during severe accidents, simulations are also presented of an extended station blackout sequence with the failure of all feedwater. For those simulations, RELAP5/MOD2 and SCDAP/MOD1 (an advanced best-estimate computer code for the prediction of reactor core behavior during a severe accident) were used. The simulations indicated that fuel rod melting was delayed significantly because the graphite acted as a heat sink.

C. D. Fletcher, A. E. Ruggles, and N. C. J. Chen, "Advanced Neutron Source System Modeling Using RELAP5," *Transactions of the American Nuclear Society, June 1990.*

The advanced neutron source (ANS), a proposed state-of-the-art research reactor to be built at the Oak Ridge National Laboratory, is currently in the conceptual design development stage. Thermal-hydraulic systems analyses with the RELAP5/MOD3 computer code (an extension of RELAP5/MOD2) are under way to provide an early safety issue evaluation for ANS. The paper discusses (a) RELAP5 code modification to provide better representation of ANS core phenomena, (b) the ANS final preconceptual design RELAP5 system model, and (c) preliminary transient accident simulation results.

C. D. Fletcher, L. S. Ghan, J. C. Determan, and H. H. Neilsen, *Conceptual Design Station Blackout and Loss-of-flow Accident analyses for the Advanced Neutron Source Reactor,* April 1994.

A system model of the Advanced Neutron Source Reactor (ANSR) has been developed and used to perform conceptual safety analyses. To better represent thermal-hydraulic behavior in the unique geometry and conditions of the ANSR core, three specific changes in the RELAP5/MOD3 computer code were implemented: a turbulent forced-convection heat transfer correlation, a critical heat flux correlation, and an interfacial drag correlation. The system model includes representations of the ANSR core, heat exchanger coolant loops, and the pressurizing and letdown systems. Analyses of ANSR station blackout and loss-of-flow accident scenarios are described. The results show that the core can survive without exceeding the flow excursion or critical heat flux thermal limits defined for the conceptual safety analysis, if the proper mitigation options are provided.

J. D. Freels, "On RELAP5-Simulated High Flux Isotope Reactor Reactivity Transients: Code Change and Application," *1993 RELAP5 International Users Meeting, Boston, MA., July 6-9, 1993.*

This paper presents a new and innovative application for the RELAP5 code (hereafter referred to as "the Code"). The code has been used to simulate several transients associated with the (presently) draft version of the High-Flux Isotope Reactor (HFIR) updated safety analysis report (SAR). This paper investigates those thermal-hydraulic transients induced by nuclear reactivity changes. A major goal of the work was to use an existing RELAP5 HFIR model for consistency with other thermal-hydraulic transient analyses of the SAR. To achieve this goal, it was necessary to incorporate a new self-contained point kinetics solver into the code because of a deficiency in the point-kinetics reactivity model of the MOD 2.5 version of the code. The model was benchmarked against previously analyzed (Known) transients. Given this new code, four event categories defined by the HFIR probabilistic risk assessment (PRA) were analyzed: (in ascending order of severity) a code-loop pump start; run-away shim-regulating control cylinder and safety plate withdrawal; control cylinder ejection; and generation of an optimum void in the target region. All transients are discussed. Results of the bounding incredible event transient, and the target region optimum void are discussed. Results of the bounding incredible event transient, the target region optimum void, are shown. Future plans for RELAP HFIR applications and recommendations for code improvements are also discussed.

G. Frei et al., "Application of RELAP5/MOD2 Evaluation Models for KNU Small-Break LOCA Analysis," *Third International Topical Meeting on Nuclear Power Plant Thermal Hydraulics and Operations, Seoul, Korea, November 1988.*

The small break loss-of-coolant accident (SBLOCA) analysis for a Korean Nuclear Unit is performed using RELAP5/MOD2/36.04. This paper presents results of studies of a pressurized water reactor two-loop plant SBLOCA analysis performed with the following evaluation models and key parameters: (a) gap conductance models of fuel rods, (b) critical heat flux correlations, (c) nodalization of the steam generator, and (d) noding scheme near the break and the emergency core cooling system injection point.

M. J. Gaeta, J. S. Bollinger, and R. A. Dimenna, *RELAP5/MOD2.5 Simulation Results for the Separate Effects Test Experiment Series, Phase 1,* 1993.

The Separate Effects Test (SET) facility is a one-fourth linear scale model of a portion of a production reactor at the Savannah River Site. The Phase I configuration is prototypical of a one-sixth sector of the moderator tank and a portion of a single pump suction piping (PSP) loop. The purpose of this work was to perform a preliminary investigation into the suitability of the full-scale SRL reactor modeling methodology to the one-fourth linear scale SET facility. The resulting model will also aid in understanding the experimental results produced by the SET experimental test series. Section 2 gives a brief description of the experimental facility. Section 3 describes the code version of RELAP5 used for this work and the SET input model constructed for the simulations. Section 4 describes the results of the model tuning and the single- and two-phase simulations. Sections 5 and 6 contain the conclusions and references respectively.

G. O. Geissler, *Multiloop Integral System Test (MIST): Final Report: MIST Phase 4 Tests: Volume 11,* Babcock and Wilcox Co., Lynchburg, VA, August 1990.

The Multiloop Integral System Test (MIST) is part of a multiphase program started in 1983 to address small-break loss-of-coolant accidents (SBLOCAs) specific to Babcock & Wilcox designed plants. MIST is sponsored by the U. S. Nuclear Regulatory Commission, the Babcock & Wilcox Owners Group, the Electric Power Research Institute, and Babcock & Wilcox. The unique features of the Babcock & Wilcox design, specifically the hot leg U-bends and steam generators, prevented the use of existing integral system data of existing integral facilities to address the thermal-hydraulic SBLOCA questions. MIST and two other supporting facilities were specifically designed and constructed for this program, and an existing facility the Once-Through Integral System (OTIS) was also used. Data from MIST and the other facilities will be used to benchmark the adequacy of system codes, such as RELAP5 and TRAC, for prediction of abnormal plant transients. The MIST Program is reported in 11 volumes.

G. O. Geissler, "MIST Program: Risk Dominant Transient Testing," *17th Water Reactor Safety Information Meeting, Rockville, MD, October 23-25, 1989.*

The Multiloop Integral System Test (MIST) Facility is a scaled physical model of a Babcock & Wilcox lowered loop, nuclear steam system. MIST was part of a program to address small-break loss-of-coolant accidents (SBLOCAs) specific to the Babcock & Wilcox designed plants. Data from MIST are used to benchmark the adequacy of system codes such as RELAP5 and TRAC for predicting abnormal plant transients. Toward the end of the test program a series of tests were performed to explore operating procedures for mitigating various accident conditions and investigate possible alternative strategies. This included tests referred to as Risk Dominant Transients in which a small-break loss-of-coolant accident was accompanied by the lack of particular auxiliary equipment or control systems that would normally be employed to mitigate the accident condition. Two of these tests examined SBLOCA transients without the benefit of the high-pressure injection system. The first of these utilized standard abnormal transient operating guideline control schemes and the second employed a more aggressive steam generator pressure control strategy to cool the plant. The results and observations from these tests are summarized.

G. Gerth, *Assessment Study of RELAP5/MOD2 Cycle 36.04 Based on the Commissioning Test Reactor Trip at Full Load at the Philippsburg 2 Nuclear Power Plant,* Siemens AG Untemehmensbereich KWU, Erlangen, Germany, April 1992.

The commissioning test "Reactor Trip at Full Load," which was performed at the nuclear power plant Philippsburg 2 (KKP 2), was recalculated with RELAP5/MOD2. The comparison of the results with the commissioning test results shows very good agreement between measurement and calculation. Difficulties were rased attempting to adjust the RPV inlet temperature, which depends on the steam generator pressure, to the initial test condition. It is assumed that the heat transfer correlations in RELAP5/MOD2 are not optimized for this problem. The deviation of SG water level during the transient between calculation and measurement is assumed to be caused by the separator model in RELAP5/MOD2.

L. S. Ghan, R. A. Shaw, and C. M. Kullberg, *A First Look at LOCAs in the SBWR Using RELAP5/MOD3,* 1993.

The General Electric Company (GE) is designing an advanced light-water reactor, the Simplified Boiling Water Reactor (SBWR), that utilizes passive safety concepts. The SBWR reactor coolant system will operate on natural circulation with decay heat removal and emergency core coolant injection being provided by passive, gravity-driven systems. The Idaho National Engineering Laboratory has developed an input model of the SBWR for the RELAP5/MOD3 thermal-hydraulic safety analysis code. Preliminary calculations have been performed to simulate three loss-of-coolant accidents: (1) a main steam line break, (2) spurious opening of one automatic depressurization valve, and (3) the rupture of the bottom drain line. Results from these three calculations were, in general, intuitively reasonable. The analyses revealed that the input model, which was created with preliminary design data, needs to be updated to reflect the current SBWR design. Nodalization of certain regions will also need to be improved. The results of the main steam line break calculation were compared to a similar TRACG calculation presented in GE's Standard Safety Analysis Report. Comparisons of the preliminary RELAP5/MOD3 results to TRACG results indicated good qualitative agreement.

L. S. Ghan and M. G. Ortiz, "Modeling Operator Actions During a Small Break Loss-of-coolant Accident in a Babcock and Wilcox Nuclear Power Plant," *1991 RELAP5/TRAC-B International Users Seminar; Baton Rouge, LA, November 4-8 Nov 1991.*

A small break loss-of-coolant accident (SBLOCA) in a typical Babcock and Wilcox (B&W) nuclear power plant was modeled using RELAP5/MOD3. This work was performed as part of the U. S. Nuclear Regulatory Commission's (USNRC) Code, Scaling, Applicability and Uncertainty (CSAU) study. The break was initiated by severing one high pressure injection (HPI) line at the cold leg. Thus, the small break was further aggravated by reduced HPI flow. Comparisons between scoping runs with minimal operator action, and full operator action, clearly showed that the operator plays a key role in recovering the plant. Operator actions were modeled based on the emergency operating procedures (EOPs) and the Technical Bases Document for the EOPs. The sequence of operator actions modeled here is only one of several possibilities. Different sequences of operator actions are possible for a given accident because of the subjective decisions the operator must make when determining the status of the plant, hence, which branch

of the EOP to follow. To assess the credibility of the modeled operator actions, these actions and results of the simulated accident scenario were presented to operator examiners who are familiar with B&W nuclear power plants. They agreed that, in general, the modeled operator actions conform to the requirements set forth in the EOPs and are therefore plausible. This paper presents the method for modeling the operator actions and discusses the simulated accident scenario from the viewpoint of operator actions.

M. Giot et al., "Analysis of Hangover Experiments on Counter-Current Flow in the Fuel Element Top Nozzle Area," *Seminar on the Commission Contribution to Reactor Safety Research, Varese, Italy, November 20-24, 1989.*

Two advanced codes (RELAP5/MOD2 and CATHARE V1.3) have been used to analyze the countercurrent flow experiments performed at the University of Hangover. The work demonstrates that even such sophisticated codes cannot well reproduce the fluid dynamic phenomena that can occur in situations typical of the fuel element top nozzle area during ECCS refilling and reflooding. Therefore, a theoretical model previously developed for a cylindrical geometry has been adapted to more complex geometries. A series of experiments have been done in order to provide complementary detailed information necessary to the new model. These information are of primary importance for better modeling of flooding at low liquid injection rates.

J. R. Gloudemans, *Multiloop Integral System Test (MIST): Final Report, Vol. I: Summary of Key Results*, NUREG/CR-5395, April 1991.

The Multiloop Integral System Test (MIST) was part of a multiphase program started in 1983 to address small break loss-of-coolant accidents (SBLOCAs) specific to Babcock and Wilcox designed plants. Data from MIST are used to benchmark the adequacy of system codes, such as RELAP5 and TRAC, for predicting abnormal plant transients. In 1982, a Test Advisory Group (TAG) was formed to identify experimental data needs for the Babcock and Wilcox designed nuclear steam system. The TAG developed a list of 17 issues perceived both to lack experimental data and to be of sufficient interest that such data were needed. The issues were grouped under four major topics: natural circulation, SBLOCAs, feed and bleed, and steam generator tube rupture. The MIST facility was scaled, designed, and tested to address these issues. The MIST tests addressed each of the 17 TAG issues. A wealth of consistent integral system data have been generated for each issue. An important issue under the topic of natural circulation was the ability of boiler-condenser mode natural circulation to remove core heat and effectively depressurize the reactor coolant. In this program, the viability of this mode of primary-to-secondary heat transfer was repeatedly observed. When the prerequisite conditions for boiler-condenser mode were met, the primary system tended to depressurize through vapor condensation and the accompanying primary-to-secondary heat transfer. The ability of the reactor vessel vent valves to augment primary system depressurization during the simulated SBLOCAs was also observed in MIST. MIST repeated exhibited system resiliency to impose changes in the primary boundary conditions as a result of the steam venting capabilities of the reactor vessel vent valves. The ability of feed and bleed cooling to provide continual core cooling as well as system cooldown and depressurization was demonstrated in MIST.

S. E. Gran and Y. A. Hassan, "Simulation of Pressurizer Tests With Noncondensable Gases Using Modified Condensation Heat Transfer Correlation in the RELAP5/MOD2 Code," *Winter meeting of the American Nuclear Society (ANS) and Nuclear Power and Technology Exhibit; San Francisco, CA, November 1989.*

The presence of noncondensable gas in a condensing vapor significantly decreases the condensation heat transfer and thus noticeably affects the pressurizer response. The pressure response to pressurized water reactor transients is important in determining the timing of the safety system responses. In accidents, nitrogen gas can be discharged into the reactor system from the accumulator after the water inventory is exhausted. The purpose of this study is to model the Massachusetts Institute of Technology (MIT) pressurizer insurge transients, in which the vapor region contains steam mixed with nitrogen gas, using the RELAP5/MOD2 thermal-hydraulic code. The RELAP5/MOD2 predictions showed poor agreement with the experimental data. A revised factor to account for the degradation of the condensation due to the presence of noncondensable gas was developed. Reasonable agreement of the revised code predictions with data was achieved.

M. Gregoric, S. Petelin, B. Mavko, and I. Parzer, "Emergency Operating Procedures for SGTR Sequence," *Technical Committee/Workshop on Computer Aided Safety Analysis, Berlin German Democratic Republic, April 1989, Computer Aided Safety Analysis 1989*, Institute Jozef Stefan, Ljubljana, Yugoslavia.

Two steam generator tube rupture accidents combined with loss of all offsite power for Nuclear Power Plant Krsko were analyzed to assess the impact of sequences of auxiliary feedwater system availability. Calculations were performed with RELAP5/MOD1/25. Results show that such a combined accident can be controlled with just half of the safety systems available (design basis). Even if less than one half of the safety systems are available (beyond design basis), the accident can be controlled by timely and correct operator actions.

D. P. Griggs, *Estimate of LOCA-FI Plenum Pressure Uncertainty for a Five- Ring RELAP5 Production Reactor Model,* March 1993.

The RELAP5/MOD2.5 code (RELAP5) is used to perform best-estimate analyses of certain postulated Design Basis Accidents (DBAs) in SRS production reactors. Currently the most limiting DBA in terms of reactor power level is an instantaneous double-ended guillotine break (DEGB) loss-of-coolant accident (LOCA). A six-loop RELAP5 K-Reactor model is used to analyze the reactor system behavior dozing the Flow Instability (FI) phase of the LOCA, which comprises only the first 5 seconds following the DEGB. The RELAP5 K-Reactor model includes tank and plenum nodalizations having five radial rings and six azimuthal sectors. The reactor system analysis provides time-dependent plenum and tank bottom pressures for use as boundary conditions in the FLOWTRAN code, which models a single fuel assembly in detail. RELAP5 also performs the system analysis for the latter phase of the LOCA, denoted the Emergency Cooling System (ECS) phase. Results from the RELAP5 analysis are used to provide boundary conditions to the FLOWTRAN-TF code, which is an advanced two-phase version of FLOWTRAN. The RELAP5 K-Reactor model has been tested for LOCA-FI and Loss-of-Pumping Accident analyses and the results compared with equivalent analyses performed with the TRAC-PF1/

MOD1 code (TRAC). An equivalent RELAP5 six-loop, five-ring, six-sector L-Reactor model has been benchmarked against qualified single-phase system data from the 1989 L-Area In-reactor Test Program. The RELAP5 K- and L-Reactor models have also been subjected to an independent Quality Assurance verification.

A. Haemaelaeinen, *Assessment of RELAP5/MOD2 Using the Test Data of REWET-II Reflooding Experiment SGI/R,* Valtion Teknillinen Tutkimuskeskus, Helsinki, Finland, May 1993.

An analysis of a reflooding experiment with RELAP5/MOD2 Cycle 36.04 is presented. The experiment had been carried out in the REWET-II facility simulating the reactor core with a bundle of 19 electrically heated rods. On the basis of the results of two calculations recommendations for the core nodalization are presented, and a modification to the code is proposed.

D. G. Hall, *Pretest Analysis Document for Test S-FS-7*, EGG-SEMI-6919, June 1985.

This report documents the pretest calculations completed for Semiscale Test S-FS-7. This test will simulate a transient initiated by a 14.3% break in a steam generator bottom feedwater line downstream of the check valve. The initial conditions represent normal operating conditions for a Combustion Engineering, Inc. System 80 nuclear power plant. Predictions of transients resulting from feedwater line breaks in these plants have indicated that significant primary system overpressurization may occur. The results of a RELAP5/MOD2/21 code calculation indicate that the test objectives for Test S-FS-7 can be achieved. The primary system overpressurization will occur, but poses no threat to personnel or plant integrity.

D. G. Hall, *Quick Look Report for Semiscale MOD-2C Test S-FS-7*, EGG-RTH-7072, October 1985.

Results of a preliminary analysis of the fourth test performed in the Semiscale MOD-2C Steam Generator Feedwater and Steam Line Break (FS) experiment series are presented. Test S-FS-7 simulated a pressurized water reactor transient initiated by a 14.3% break in a steam generator bottom feedwater line downstream of the check valve. With the exception of primary pressure, the initial conditions represented the initial conditions used for the Combustion Engineering, Inc. System 80 Final Safety Analysis Report Appendix 15B calculations. The transient included an initial 926-s period in which only the response of automatic plant protection systems was simulated. This period was followed by a series of operator actions necessary to stabilize the plant. The break was then isolated and the broken loop steam generator secondary was refilled. The test results provided an evaluation of the effectiveness of the automatic responses in minimizing primary system overpressurization and operator actions in stabilizing the plant and heat transfer information under refill conditions. The data were compared with the RELAP5/MOD2 computer code, which also contributed to an evaluation of the effect of break size on primary overpressurization and primary-to-secondary heat transfer using data from other tests in the series.

D. G. Hall and R. A. Shaw, *Pretest Analysis Document for Test S-FS-11*, EGG-SEMI-6985, June 1985.

This report documents the pretest calculations completed for Semiscale Test S-FS-11. This test will simulate a transient initiated by a 50% break in a steam generator bottom feedwater line downstream of the check valve. The initial conditions represent normal operating conditions for a Combustion Engineering, Inc. System 80 nuclear plant. Predictions of transients resulting from feedwater line breaks in these plants have indicated that significant primary system overpressurization may occur. The results of a RELAP5/MOD2/21 calculation indicate that the test objectives for Test S-FS-11 can be achieved. The primary system overpressurization will occur but poses no threat to personnel or plant integrity.

P. C. Hall, *RELAP5/MOD2 Calculations of OECD LOFT Test LP-SB-02*, United Kingdom, NUREG/IA-0021, April 1990.

To help assess the capabilities of RELAP5/MOD2 for pressurized water reactor fault analysis, the code is being used by the Central Electricity Generating Board to simulate several small loss-of-coolant accident (LOCA) and pressurized transient experiments in the Loss-of-Fluid Test (LOFT) experimental reactor. The present report describes an analysis of small LOCA test LP-SB-02, which simulated a 1% hot leg break LOCA in a pressurized water reactor, with delayed tripping of the primary coolant pumps. This test was carried out under the Organization for Economic Cooperation and Development/LOFT Program. An important deficiency identified in the code is inadequate modeling of the quality of the fluid discharged from the hot leg into the break pipework. This gives rise to large errors in the calculated system mass inventory. The effect of using an improved model for vapor pull-through into the break is described. A second significant code deficiency identified is the failure to predict the occurrence of stratified flow in the hot leg at the correct time in the test. It is believed that this error contributed to the gross errors in the loop flow conditions after about 1,300 seconds. Additional separate effects data necessary to resolve the code deficiencies encountered are identified.

P. C. Hall and G. Brown, *RELAP5/MOD2 Calculations of OECD-LOFT Test LP-SB-01*, GD\PE-N\544 (Rev.), November 1986, Central Electricity Generating Board, Barnwood, United Kingdom.

To assist the Central Electricity Generating Board in assessing the capabilities and status of RELAP5/MOD2, the code has been used to simulate small break loss-of-coolant accident test LP-SB-01 carried out in the Loss-of-Fluid-Test (LOFT) experimental reactor under the Organization for Economic Cooperation and Development LOFT program. This test simulated a 1.0% hot leg break in a pressurized water reactor, with early tripping of the primary coolant circulating pumps. This report compares the results of the RELAP5/MOD2 analysis with experimental measurements.

C. Harwood and G. Brown, *RELAP5/MOD2 Calculation of OECD-LOFT Test LP-SB-03*, GD\PE-N\535 (Rev), ICAP Number 00047, NUREG/IA-0013, 1986, Central Electricity Generating Board, Barnwood United Kingdom.

This report compares the results of the RELAP5/MOD2 analysis with experimental measurements. A simulation of test LP-SB-03 was previously carried out at the Generation Development Construction Division using RELAP5/MOD1 and contains more sophisticated hydraulic models and constitutive relationships. Comparison of the RELAP5/MOD2 and MOD1 calculations show that RELAP5/MOD2

performs better than RELAP5/MOD1 in a number of key areas; greatly reduced mass errors, improved numerical stability, and improved separator modeling and modeling of accumulator injection.

P. C. Hall and D. R. Bull, *Analysis of Semiscale Test S-LH-1 Using RELAP5/MOD2,* National Power Macular, Barnwood, U. K., April 1992.

The RELAP5/MOD2 code is being used by GDCD for calculating Small Break Loss of Coolant Accidents (SBLOCA) and pressurized transient sequences for the Sizewell "B" PWR. These calculations are being carried out at the request of the Sizewell "B" Project Management Team. To assist in validating RELAP5/MOD2 for the above application, the code is being used by GDCD to model a number of small LOCA and pressurized fault simulation experiments carried out in various integral test facilities. The present report describes a RELAP5/MOD2 analysis of the small LOCA test S-LH-1 which was performed on the Semiscale Mod-2C facility. S-LH-1 simulated a small LOCA caused by a break in the cold leg pipework of an area equal to 5% of the cold leg flow area.

D. Hassan, "AP600 Passive Safety System Modeling Using RELAP5/MOD1," *1990 Joint Meeting of the Nuclear Societies of Israel, Herzlia, Israel, December 17-18, 1990.*

A part of the passive safety system (PSS) of the Westinghouse advanced pressurized water reactor AP600 has been modeled using the RELAP5/MOD1 computer program. It consists of an accumulator vessel which injects, via a certain pipework, water straight into the AP600 reactor vessel.

Y. A. Hassan, *Assessment of a Modified Interfacial Drag Correlation in Two-Fluid Model Codes,* Dallas, TX, June 1987, CONF-870601.

Analysis of low flooding rate experiments and a number of boiloff experiments with the RELAP5/MOD2 computer code has shown that the code underpredicts the collapsed liquid level and, consequently, overpredicts the liquid carryover. Recent analyses using several other codes (e.g., TRAC-BD1 and the French code CATHARE) have also resulted in the underprediction of collapsed liquid level histories. The discrepancy between the measurements and code predictions is attributed to the interfacial drag between the phases. A new interfacial drag formulation in the bubbly/slug flow regimes is incorporated in the RELAP5/MOD2 code. Better agreement with the measurements is obtained.

Y. A. Hassan, "Analysis of FLECHT and FLECHT-SEASET Reflood Tests with RELAP5/MOD2," *Nuclear Safety Magazine*, February 1986.

Overall, the RELAP5/MOD2 reflood heat transfer package has demonstrated promising capabilities in predicting the behavior of FLECHT and FLECHT-SEASET unblocked flow tests. In general, the correct qualitative system behavior was predicted. The predictions for the steam cooling test and the high flooding rate test are in good agreement with the measurements in the low flooding case. The major shortcomings of RELAP5/MOD2 are its tendencies to predict lower temperatures and unrealistic void fraction oscillations with low flooding rate test cases. The spikes in void fraction histories were flow-regime dependent and

traced to discontinuities in interfacial drag models. From the results, it is clear that the interfacial drag model at the quench front needs to be refined to achieve accurate results during reflood.

Y. A. Hassan, "Dispersed-Flow Heat Transfer During Reflood in a Pressurized Water Reactor After a Large-Break Loss-of-Coolant Accident," *American Nuclear Society and Atomic Industrial Forum Joint Meeting, Washington, D. C., November 1986.*

The postulated loss-of-coolant accident (LOCA) of a pressurized water reactor has been the subject of intensive experimental and analytical studies in light water reactor safety analysis. Many efforts are devoted to the investigation of the thermodynamic behavior of the reactor core and the effectiveness of the emergency core cooling system during the reflood phase of a LOCA. In the initial period of reflood phase, the flow patterns at the core higher elevations are considered as the dispersed flow regime. The effect of liquid phase on the heat transfer cannot be neglected in this dispersed flow regime. It has been found experimentally that a steam-water-droplet flow is ultimately responsible for terminating the cladding temperature excursions in a LOCA. Recently, a study of reflood test predictions with RELAP5/MOD2 showed a tendency to predict lower cladding temperatures during the dispersed flow regime. The purpose of this study is to present a new dispersed flow film boiling implemented in RELAP5/MOD2. In addition, RELAP5 underestimated the vapor temperature. Therefore, a revised interfacial heat transfer coefficient between the droplets and steam was incorporated in the code. Comparison of the current predicted cladding/fuel temperature histories with the reflood data showed fair agreement.

Y. A. Hassan, "Modifications and Assessment of Rewetting Correlations for Light Water Reactor System Analysis," *American Nuclear Society and Atomic Industrial Forum Joint Meeting, Washington, D. C., November 1986*.

The qualitative aspects of reflood heat transfer in the system codes (e. g., RELAP5/MOD2, TRAC-PF1/MOD1, COBRA-TF) can be represented with a generalized boiling curve. The anchor points used to specify the boiling curve are the critical heat flux (CHF) temperature (T_{CHF}) and the minimum flow boiling temperature (T_{min}). The cooldown during the quenching process is affected by the minimum film boiling heat flux. This aspect of the quenching process has not been studied as much as the CHF phenomenon. The purpose of this paper is to compare several rewetting correlations. These correlations were implemented in a special version of RELAP5/MOD2. Good agreement between several FLECHT-SEASET data and predicted rewetting temperatures was obtained when a new modified formulation of the Henry rewetting correlation was used to account for the mass rate dependence.

Y. A. Hassan and T. K. Blanchat, "A Comparison Study of the Westinghouse Model E Steam Generator Using RELAP5/MOD2 and RETRAN-02 Computer Codes," *Third International Topical Meeting on Nuclear Power Plant Thermal Hydraulics and Operations, Seoul, Korea, November 1988.*

Comparisons of the predictions of RELAP5/MOD2 and RETRAN-02 were performed on a model of the Westinghouse Model E steam generator. This is a U-tube steam generator with an integral preheater section. The model used was the result of a detailed nodalization study performed with the RETRAN code

to determine the minimum number of nodes (or control volumes) required in the secondary side to model the response of steam generator water level and primary side exit (cold-leg) temperature during startup testing and operational transients. A parametric study of the separator component was performed. The separator void fraction control parameters VOVER and VUNDER were varied and the effects on the steam generator circulation ratio and steam quality were investigated. It was determined that the desired circulation ratio was easily achieved but that the separator steam outlet's vapor void fraction (and corresponding steam quality) was relatively insensitive to its control parameter (VOVER). An additional parametric study was performed to study the effects of steam line exit pressure on steam quality. Five transients were used as forcing functions to generate the response of the steam generator. The selection of these transients was based on providing both nominal and severe forcing functions on the heat removal capability of the secondary side. The steam generator transients investigated were (a) loss of feedwater, (b) turbine trip, (c) decrease in load demand, (d) increase in load demand, and (e) decrease in inlet feedwater temperature. Steam line exit mass flow rate, secondary side liquid mass inventory and water level, and primary side cold leg temperature predictions were compared with the RETRAN-02 code results. Reasonable comparisons were obtained with the RETRAN code and with qualitative behavior of simulation experiments.

Y. Hassan and T. Blanchat, "A Modified Heat Transfer Correlation and Flow Regime Map for Tube Bundles," *Fourth International Topical Meeting on Nuclear Reactor Thermal-Hydraulics Proceedings, Vol. 1, (NURETH-4), pp. 528-533, October 10-13, 1989.*

A RELAP5/MOD2 computer code model for a Once Through Steam Generator has been developed. The calculated heat transfer in the nucleate boiling flow was underpredicted as shown by a predicted superheat of only 11°C (40 - 60°°F). Existing heat transfer correlations used in thermal-hydraulic computer codes do not provide accurate predictions of the measurement-derived secondary convective heat transfer coefficients for steam generators because they were developed for flow inside tubes, not tube bundles. The RELAP5/MOD2 flow regime map was modified to account for flow across bundles. This modified flow regime map predicts better transition criteria between bubbly-to-slug and slug-to-annular flow. Consequently, improved saturated conditions for the fluid flow at the entrance to the boiler were obtained. A modified Chen-type heat transfer correlation was developed to predict the boiling heat transfer for steam generator tube bundle geometries. This correlation predicts better superheat.

Y. A. Hassan and T. Blanchat, "RELAP5/MOD2 Code Modifications to Obtain Better Predictions for the Once-Through Steam Generator," *Winter meeting of the American Nuclear Society (ANS) and Nuclear Power and Technology Exhibit; San Francisco, CA, November 1989.*

The steam generator is a major component in pressurized water reactors. Predicting the response of a steam generator during both steady-state and transient conditions is essential in studying the thermal-hydraulic behavior of a nuclear reactor coolant system. Therefore, many analytical and experimental efforts have been performed to investigate the thermal-hydraulic behavior of the steam generators during operational and accident transients. The objective of this study is to predict the behavior of the secondary side of the once-through steam generator (OTSG) using the RELAP5/MOD2 computer code. Steady-state

conditions were predicted with the current version of the RELAP5/MOD2 code and compared with experimental plant data. The code predictions consistently underpredict the degree of superheat. A new interface friction model has been implemented in a modified version of RELAP5/MOD2. This modification, along with changes to the flow regime transition criteria and the heat transfer correlations, currently predicts the degree of superheat and matched plant data.

Y. A. Hassan and G. C. Henson, "RELAP5/MOD2 Simulation of ORNL Reflood Tests," *Transactions of the American Nuclear Society, 55,* 1987, pp. 454-456.

Following the blowdown phase of a postulated loss-of-coolant accident in a pressurized water reactor, the reactor core is uncovered and the fuel rods experience rapid temperature excursions because of decay power production and low heat transfer. To prevent fuel from overheating, emergency core cooling is activated and the accident enters the reflood phase. Several experimental and analytical programs have been performed to investigate the reflooding phenomena. The purpose of this study is to simulate several reflooding tests performed at Oak Ridge National Laboratory in the Thermal Hydraulic Test Facility using RELAP5/MOD2/36.04 to assess its capabilities in predicting the reflood phenomena. The code has demonstrated the capability to predict experimental behavior; however, refinements in the interfacial drag are required to improve the code's predictions.

Y. A. Hassan and M. Kalyanasundaram, "U-tube Steam Generator Predictions: New Tube Bundle Heat Transfer Correlation," *Winter Meeting of the American Nuclear Society (ANS) and Nuclear Power and Technology Exhibit; San Francisco, CA, November 1989.*

Steam generators play a very important role in the safe and reliable operation of pressurized water reactor (PWR) power plants. They determine the thermal-hydraulic responses of the primary coolant system during operational and accident transients. The Westinghouse Model Boiler No. 2 (MB-2) is an experimental test facility to provide a comprehensive data on the steady-state and transient responses of a U-tube steam generator. In a previous study, an optimized nodalization scheme for MB-2 was developed using the one-dimensional RELAP5/MOD2 system analysis code. Analysis of the system steady-state and transient responses predicted by RELAP5 indicated an underprediction of the secondary convective heat transfer from the primary to the secondary side of the steam generator. The objective of the present study is to evaluate the effect of modifications in the heat transfer correlations and critical heat flux correlations in RELAP5 on predicting better secondary heat transfer during steady-state and loss-of-feedwater (LOF) transient in a U-tube steam generator. The modified code has mitigated the under-prediction of the secondary convective heat transfer during both steady-state and LOF transient.

Y. A. Hassan and M. Kalyanasundaram, "U-tube Steam Generator Predictions: Bundle Convection Heat Transfer Correlations", *Nuclear Technology, 94,* No. 3, June 1991, pp. 394-406.

This paper reports on the development of a RELAP5/MOD2 computer code model for a Model Boiler-2 U-tube steam generator (UTSG) to predict the thermal-hydraulic response of a UTSG during steady-state operation and for a loss-of-feedwater (LOF) transient. Steady-state conditions calculated by RELAP5 are compared with the measured data. The calculated heat transfer from the primary to the

secondary side of the steam generator is found to be underpredicted by 30%. The heat transfer correlations used in existing thermal-hydraulic codes are developed for flow inside individual tubes and not for flow around tube bundles. Consequently, the second convective heat transfer is not accurately predicted by the codes. A revised version of the RELAP5 code with modified heat transfer correlations reasonably predicts the primary to the secondary heat transfer in bundle environments. Improved heat fluxes and heat transfer coefficients are obtained during steady-state and LOF accident transients. Steady-state behavior of the Semiscale MOD-2C steam generator is also computed with both the original and the revised versions of the code. Good agreement is achieved between the predictions and the test data when the modified heat transfer correlations are utilized.

Y. A. Hassan and C. D. Morgan, "Comparison of Lehigh 3 x 3 Rod Bundle Post-CHF Data With the Predictions of RELAP5/MOD2," *American Nuclear Society and Atomic Industrial Forum Joint Meeting, Washington, D. C., November 1986.*

To date, there are only very limited data for nonequilibrium convective film boiling in rod bundle geometries. A recent nine (3 x 3)-rod bundle post-critical heat flux (CHF) from the Lehigh University test facility was simulated using RELAP5/MOD2/36.02. The simulation assessed the code's capabilities in predicting the overall convective mechanisms in post-CHF heat transfer in rod bundle geometries. The code calculations were compared with the experimental data. With the exception of a premature quench, the cladding temperatures were in a reasonable agreement with the data. However, the code predicted low vapor superheats and void fraction oscillations.

Y. A. Hassan and L. L. Raja, "Simulation of Loss of RHR During Midloop Operations and the Role of Steam Generators in Decay Heat Removal Using the RELAP5/MOD3 Code," *Nuclear Technology* September 1993.

Loss of residual heat removal during midloop operations was simulated for a typical four-loop pressurized water reactor operated under reduced inventory level using the RELAP5/MOD3 thermal-hydraulic code. Two cases are considered here: one for an intact reactor coolant system with no vents and the other for an open system with a vent in the pressurizer. The presence of air in the reactor coolant system is modeled, and its effect on the transients is calculated. The steam generators are considered under water in the secondary covering the U-tubes. The system is pressurized once the water starts boiling in the core. Higher system pressures are seen for the closed-vent case. Reflux condensation occurs in the steam generator U-tubes preventing complete uncovery of the core and aiding in decay heat removal. The total heat removed by the steam generators is one-third of that produced by the core. The hot leg and vessel upper head pressurization cause the reactor vessel to act as a manometer where the core level drops and the downcomer level rises. This phenomenon is seen at different transient times for the two cases. Since it occurs only for a brief period, the rest of the transient is unaffected. Fuel centerline and clad temperatures are observed to be below the accepted safety limits throughout both transients.

Y. A. Hassan and L. L. Raja, "Analysis of Experiments for Steam Condensation in the Presence of Noncondensable Gases Using the RELAP5/MOD3 Code," *Nuclear Technology*, October 1993.

A computational investigation of experiments involving he condensation phenomenon in the presence of noncondensable gases was performed. The RELAP5/MOD3 thermal-hydraulic code was utilized for this analysis. Two separate-effects experiments were studied, which are relevant to actual situations encountered in the industry. The first experiment involved condensation of steam in an inverted U-tube when nitrogen is present. A constant flow of steam was injected into the U-tube and condensed along its surface. The condensing length was a function of the injected nitrogen rate and the secondary temperature. The code predicted an active condensation zone with unimpeded heat transfer and a passive zone with no heat transfer. The lengths of these zones agree with the experimental data. The gas temperatures in the U-tube were favorably predicted except for a discrepancy where the calculated primary temperatures were lower than the secondary temperatures for several cases. Active nitrogen contents in the tube were underpredicted by the code. The second experiment investigated was the Massachusetts Institute of Technology's steam condensation experiment. This experiment modeled the proposed containment cooling system for advanced reactors. Steam was generated in a vessel in which air was present. The steam in the steam-air mixture condensed on the surface of a cooled copper cylinder. Computational predictions of this experiment revealed that heat transfer coefficients vary with air fraction. Calculated heat transfer coefficients were compared with the data, and it was found that the results were better for higher system pressures than for lower pressures.

Y. A. Hassan and P. Salim, "Steady-State Simulations of a 30-Tube Once-Through Steam Generator with the RELAP5/MOD3 and RELAP5/MOD2 Computer Codes," *Nuclear Technology, 96,* Texas A&M University, Department of Nuclear Engineering, College Station, TX, October 1991.

A steady-state analysis of a 30-tube once-through steam generator has been performed on the RELAP5/MOD3 and RELAP5/MOD2 computer codes for 100, 75, and 65% loads. Results obtained are compared with experimental data. The RELAP5/MOD3 results for the test facility generally agree reasonably well with the data for the primary-side temperature profiles. The secondary-side temperature profile predicted by RELAP5/MOD3 at 75 and 65% loads agrees fairly well with the data and is better than the RELAP5/MOD2 results. However, the RELAP5/MOD3 calculated secondary side temperature profile does not compare well with the 100% load data.

Y. A. Hassan and P. Salim, "Analysis of a Nuclear Power Plant using RELAP5/MOD2 with a Modified Heat Transfer Correlation," *Winter meeting of the American Nuclear Society (ANS) and Nuclear Power and Technology Exhibit, San Francisco, CA, November 1989.*

The RELAP5/MOD2 computer code uses heat transfer correlations that were originally developed for flow inside tubes. During the thermal-hydraulic modeling and analysis of a nuclear reactor system, flow outside the tube bundle occasionally takes place. This inconsistency in the code results in less accurate heat transfer predictions in the reactor core and steam generator where the bundle flow environment exists. The RELAP5/MOD2 analysis of a U-tube steam generator shows that the code underpredicts the heat transfer from the primary to the secondary side, resulting in a higher cold-leg temperature. For this study, the IBM version of RELAP5/MOD2 (Cycle 36.05) is used. The RELAP5 model of a nuclear power plant used to perform this study is a two-loop representation of a four-loop pressurized water reactor (PWR) power plant with U-tube steam generators.

Y. A. Hassan and P. Salim, "Simulation of the Primary-secondary Leak Experiment of IAEA'S Third Standard Problem Exercise Using the RELAP5/MOD2 and RELAP5/MOD3 Computer Codes," *Nuclear Technology*, November 1991.

The International Atomic Energy Agency's third standard problem exercise (SPE-3) is simulated with the RELAP5/MOD2 and RELAP5/MOD3 computer codes. The SPE-3 consists of the simulation of the transient resulting from an 11.9% break in the hot collector of the steam generator (primary-secondary leak) of the PMK-NVH test facility. The predicted scenario is compared with the experimental data. Generally, a reasonable agreement between the code predictions and experimental data is obtained. One important calculated parameter that demonstrates deviation for the data is the break mass flow rate. The RELAP5/MOD3 predictions did not display significant differences. The paper is part of an international effort for codes/benchmarks.

C. E. Hendrix and J. C. Determan, *Calvert Cliffs RELAP5/MOD3/SCDAP Plant Deck,* December 1992.

This report documents the development of a RELAP5/MOD3/SCDAP input deck for the Calvert Cliffs nuclear power plant. Through the addition of SCDAP inputs, NPA interactive capabilities, and significant nodalization enhancements, the range of applicability of this input deck has been greatly increased.

L. S. Ho and J. S. Kim, "Prediction of Loop Seal Formation and Clearing During Small Break Loss of Coolant Accident," *Journal of the Korean Nuclear Society,* Wonjaryok Hakhoeji, September 1992.

Behavior of loop seal formation and clearing during small break loss of coolant accident is investigated using the RELAP5/MOD2 and MOD3 codes with the test of SB-CL-18 of the LSTF (Large Scale Test Facility). The present study examines the thermal-hydraulic mechanisms responsible for early core uncovery including the manometric effect due to an asymmetric coolant holdup in the steam generator upflow and downflow side. The analysis with the RELAP5/MOD2 demonstrates the main phenomena occurring in the depressurization transient including the loop seal formation and clearing with sufficient accuracy. Nevertheless, several differences regarding the evolution of phenomena and their timing have been pointed out in the base calculations. The RELAP5/MOD3 predicts overall phenomena, particularly the steam generator liquid holdup better than the RELAP5/MOD2. The nodalization study in the components of the steam generator U-tubes and the crossover legs with the RELAP5/MOD3 results in good prediction of the loop seal clearing phenomena and their timing.

B. J. Holmes, *Post-test Analysis of LOBI BT-01 Using RELAP5/MOD2 and RELAP5/MOD3,* AEA Reactor Services, Winfrith, U. K., August, 1991.

LOBI is a high pressure, electrically heated integral system test facility simulating a KWU 1,300 MW PWR scaled 1:712 by volume, although full scale has been maintained in the vertical direction. This report describes the results of an analysis of test BT-01, which simulates a 10% steam line break. The bulk of the analysis was performed using the Project Version of RELAP5/MOD2, with additional calculations using RELAP5/MOD3 for comparison. The codes provided generally good agreement with data. In

particular, the break flows were well modeled, although the mass flow data proved to be unreliable, and this conclusion had to be derived from interpreting other signals. RELAP5 overpredicted primary/ secondary heat transfer in the broken loop, however, leading to a more rapid cooldown of the primary circuit. Furthermore, the primary side pressure response was critically dependent upon the pressurizer behavior, and the correct timing of the uncovery of the surge line. Interphase drag was not well predicted in the broken loop steam generator internals, although some improvement was seen in the RELAP5/MOD3 predictions. MOD3 gave a reduction in primary/secondary heat transfer during the test preconditioning phase, resulting in a lower secondary side pressure at the start of the transient compared with MOD2.

H. Holmstrom, "Finnish Assessment of RELAP5/MOD2," *14th Water Reactor Safety Information Meeting, Gaithersburg, Maryland, October 27, 1986*, NUREG/CP-0082, Volume 5, February 1987, pp. 133-142, Technical Research Center of Finland.

The first frozen version of RELAP5/MOD2/36 was received in Finland in February 1985. Four assessment cases and several hypothetical large pressurized water reactor cases have been calculated so far. The code has generally produced better results and run better than MOD1. However, some problems have been encountered. There still seems to be discontinuities in the code and the interphase friction seems to be excessive.

H. Holmstrom, "Technical Research Centre of Finland Use of RELAP5/MOD2," *13th Water Reactor Safety Information Meeting, Washington, D. C., October 1985*, NUREG/CP-0072, Volume 5, February 1986, Technical Research Centre of Finland.

Reactor safety research in Finland is described in a general way, and the Technical Research Centre's computer code system for thermal-hydraulic accident analysis is introduced. The role of RELAP5/MOD2 together with the current experiences and plans for future use are also discussed. According to the plans RELAP5/MOD2 will be the main tool in the analyses of large and small break loss-of-coolant accidents and some other transients together with self-developed faster computer codes. The limited experiences with RELAP5/MOD2 have been promising, although not completely without problems.

T. S. Horng, Y. D. Huang, L. Y. Liao, C. H. Lee, and Y. B. Chen, "Assessment of RELAP5/MOD2 Using Low Pressure Two Phase Flow Distribution Data," *Third International Topical Meeting on Nuclear Power Plant Thermal Hydraulics and Operations, Seoul, Korea, November 1988*, Institute of Nuclear Energy Research.

RELAP5/MOD2 has been widely used to simulate the loss-of-accidents of light water reactors. During the blowdown, the system depressurizes from initial high pressure to near atmospheric pressure at the end of the accident. However, the general capability of RELAP5/MOD2 at near atmospheric pressure has not been extensively reviewed. A simple test facility, which contains two vertical tubes in parallel to represent the reactor coolant channels, has been established at the Institute of Nuclear Energy Research to assess the ability of RELAP5/MOD2 to predict low-pressure two-phase flow distribution. The experimental data are compared with the computational results. In the present study, calculations with the recommended nonequilibrium option of RELAP5/MOD2 are not able to obtain realistic results because of

computation failure. Although the simulated system can avoid the unphysical transient and reach steady-state for all test conditions by using the thermal equilibrium option, studies have been performed to identify the causes of failure. It has been found that simulations with the nonequilibrium option and stricter mass error acceptance criteria can suppress the unrealistic oscillations and reach steady-state for all tests. But only little improvement can be achieved for the differences of major hydraulics properties between computational results and measured values. Further studies about RELAP5/MOD2 models under low-pressure conditions are suggested.

J. Hyvaerinen, H. Kalli, and T. Kervinen, "RELAP5 Assessment with REWET-III Natural Circulation Experiments," *Fourth International Topical Meeting on Nuclear Reactor Thermal-Hydraulics, (NURETH-4) Proceedings Vol. 1.,* U. Mueller, K. Rehme, and K. Rust (eds.), Karlsruhe, Germany, Braun, 1989.

The Technical Research Centre of Finland in cooperation with the Lappeenranta University of Technology has built a scaled facility, REWET-III, to investigate the natural circulation phenomena in the VVER-440 type PWRs in operation in Loviisa, Finland. The VVER-440 reactors have certain unique features; especially, these reactors have horizontal steam generators and relatively small driving head for natural circulation. The present paper summarizes the experience gained in the RELAP5/MOD1-EUR and RELAP5/MOD2 calculations of the selected REWET-III single- and two-phase natural circulation experiments.

J. Hyvaerinen, *Assessment of RELAP5/MOD2 Against Natural Circulation Experiments Performed with the REWET-III Facility,* Valtion Teknilllinen Tutkimuskeskus, Helsinki, Finland, April 1992.

Natural circulation experiments carried out in the REWET-III facility in 1985 have been used for RELAP5/MOD2 assessment. The REWET-III facility is a scaled-down model of VVER-440 type reactors. The facility consists of a pressure vessel in which the downcomer is simulated with an external pipe assembly, hot and cold legs with loop seals and a horizontal steam generator. The volume scaling factor compared to the reference reactor is 1:2333. The present paper summarized the experiences gained in the RELAP5/MOD2 calculations of selected REWET-III single- and two-phase natural circulation experiments. The code's ability to represent the main phenomena of experiments in both cases was satisfactory.

M. Ishiguro, T. Nemoto, and A. Hiratsuka, *Implementation of Reactor Safety Analysis Code, RELAP5/MOD3 and its Vectorization on Supercomputer FACOM VP2600,* Japan Atomic Energy Research Institute, March 1991.

RELAP5/MOD3 is an advanced reactor safety analysis code developed at Idaho National Engineering Laboratory Idaho National Engineering Laboratory (INEL) under the sponsorship of USNRC. The code simulates thermal-hydraulic phenomena involved in loss-of-coolant accidents in pressurized water reactors. The code has been introduced into JAERI as a part of the technical exchange between the JAERI and USNRC under the ROSA-IV Program. First, the conversion to FACOM (=FUJITSU) M-780 version was carried out based on the IBM version extracted from the original INEL RELAP5/MOD3 source code. Next, the FACOM version has been vectorized for efficient use of new supercomputer

FACOM VP2600 at JAERI. The computing speed of vectorized version is about three times faster than the scalar. The present vectorization ratio is 78%. In this report, both the implementation and vectorization methods on the FACOM computers are described.

G. Jacobs, "RELAP5/MOD2 Post-Test Analysis of a Forced Feed Reflood Experiment in an Electrically Heated 61-Rod Bundle with a Tight Lattice," KFK-4450, June 1987, *Safety-Oriented LWR Research. Annual Report,* Kernforschungszentrum Karlsruhe G.m.b.H., Federal Republic of Germany, Inst. fuer Neutroenphysik und Reaktortechnik.

To test the applicability of RELAP5/MOD2 to tight fuel rod lattices of advanced pressurized water reactors (PWRs) presently being investigated, a posttest analysis was performed of an experiment of the FLORESTAN- Programme. RELAP5/MOD2 was unable to adequately simulate the reflood behavior observed in the experiment. Modeling effort is needed to extend the capability of RELAP5 toward applications to advanced PWRs, especially for the reflood phase of loss-of-coolant accidents.

G. Jacobs and A. Galvan, "Application of the Flooding Option of the RELAP5/MOD2 LWR Thermal-Hydraulic Code to a SEFLEX Experiment," *Nuclear Safety Project Annual Report,* 1986, Kernforschungszentrum Karlsruhe G.m.b.H, Federal Republic of Germany.

Using RELAP5/2/36.04, which has been installed on a CRAY X-MP at KFA Juelich via network telecommunication, posttest analyses of forced reflood tests of the SEFLEX and FLORESTAN experimental programs have been performed. A consolidated KFK-version of COMMIX-2 has been transmitted to Argonne National Laboratory. It contains most options of COMMIX-1B (excluding the skew-upwind technique) as well as new routines for the linewise, planewise, or regionwise integration of the Poisson-type pressure and enthalpy equation. Main progress in the vectorization of COMMIX-2 was the implementation of red/black-successive-over-relaxation (SOR)-algorithms for the solution of the Poisson-type equations.

J. L. Jacobson and R. G. Hanson, "Status of the RELAP5 User Guidelines," *15th Water Reactor Safety Information Meeting, Gaithersburg, MD, October 26, 1987.*

This paper presents an overview of a RELAP5 user guidelines document that is currently being developed under the sponsorship of the U. S. Nuclear Regulatory Commission at the Idaho National Engineering Laboratory. The RELAP5 user guidelines will provide insight for proper code use for specific applications, and specific guidance relative to nodalization of nuclear power plants and experimental facilities based on a standard nodalization philosophy.

G. W. Johnsen, "RELAP5/MOD2 Development," *13th Water Reactor Safety Research Information Meeting, Washington, D.C., October 1985.*

RELAP5/MOD2 is a pressurized water reactor system transient analysis computer code developed for the U. S. Nuclear Regulatory Commission Safety Research and Regulatory Programs. MOD2 was officially released in April 1984. Since that time, development work has focused on refinements designed

to increase code speed, usability, and reliability. Plans for FY-1986 call for continued maintenance and use support for RELAP5. In addition, a new self-initialization option will be added to reduce the time and cost presently needed to initialize large plant models. This option will use the existing steady-state and nearly-implicit solution scheme features, coupled with a generic, built-in controller package. The latter will permit the user to specify any one of the several parameters set to be kept fixed, while other variables may "float." The steady-state option and a new solution scheme will cause the model to relax to a steady-state condition many times faster than would be physically possible.

G. W. Johnsen and Y. S. Chen, "RELAP5: Applications to High Fidelity Simulation," *Eastern Simulation Conference, Orlando, FL, 1988.*

RELAP5 is a pressurized water reactor system transient simulation code for use in nuclear power plant safety analysis. MOD2 may be used to simulate a wide variety of abnormal events, including loss-of-coolant accidents, operational transients, and transients in which the entire secondary system must be modeled. In this paper, a basic overview of the code is given, its assessment and application illustrated, and progress toward its use as a high fidelity simulator described.

G. W. Johnsen, "RELAP5 Model Improvements for AP600 and SBWR," *22nd Water Reactor Safety Information Meeting, Bethesda, MD, October 24-26, 1994.*

Since the middle of 1992, the INEL has been engaged in incorporating improvements into the RELAP5/MOD3 computer code for the U. S. Nuclear Regulatory Commission to enable the code to model postulated accident behavior in the AP600 (Westinghouse) and SBWR (General Electric) advanced light water reactor designs. This paper summaries the scope of the development effort and highlights some results that illustrate the progress.

J. L. Judd and W. K. Terry, "RELAP5 Kinetics Model Development for the Advanced Test Reactor," *International Topical Meeting on Advances in Mathematics, Computation, and Reactor Physics, Pittsburgh, PA, April 28 - May 2, 1991.*

A point-kinetics model of the Advanced Test Reactor has been developed for the RELAP5 code. Reactivity feedback parameters were calculated by a three-dimensional analysis with the PDQ neutron diffusion code. Analyses of several hypothetical reactivity insertion events by the new model and two earlier models are discussed.

M. Kalyanasundaram and Y. A. Hassan, "Analysis of Loss-of-Feedwater Transients in MB-2 using RELAP5/MOD2," *Transactions of the American Nuclear Society, Joint Meeting of the European Nuclear Society and American Nuclear Society, Washington, D.C., Volume 57,* 1988, pp. 143-147.

The steam generator is the major controlling component in a wide range of transients and accidents in pressurized water reactors. The need to understand the steam generator response to transient conditions has led to many experimental and analytical investigations. In this study, a RELAP5/MOD2 model was developed for the Westinghouse Model F steam generator test facility Model Boiler No. 2 (MB-2). Model

Boiler No. 2 is a power scaled representation approximately equal to 0.8% of the Model F steam generator unit. The objective of the MB-2 test program was to provide comprehensive data on the thermal-hydraulic behavior of the steam generator under transient conditions. The objective of this study was to simulate the test facility using Texas A&M University's RELAP5/MOD2. The code's steady-state and loss-of-feedwater transient predictions were compared with the test data. A favorable agreement was obtained. Further refinement in the heat transfer correlations in the tube bundle is needed.

J. C. Kang, B. S. Pei, G. P. Yu, and R. Y. Yuann, "Analysis of the Mannshan Unit 2 Full Load Rejection Transient," *Transactions of the American Nuclear Society, 55*, November 1987, pp. 468-470, National Tsing-Hua University, Taiwan.

Mannshan Unit 2 is a Westinghouse three-loop pressurized water reactor with a rated core power of 2,775 MW (thermal) and a rated core flow of 4,702 kg/s. Before full power operation, a planned net load rejection was performed during the startup test by opening the main transformer highside breakers. The generator power rapidly reduced to station load. All 16 steam dump valves immediately popped open, and control bank-D rods automatically stepped in as the temperature difference T_{avg} - T_{ref} reached a programmed 2.8°^{o}C. Nuclear power decreased smoothly as control rods were inserted into the core. The pressurizer pressure and liquid levels also dropped. Neither safety injection nor reactor trip occurred during this transient. The test was done to verify that the whole system would function properly under a transient to keep the reactor from scramming and that the vessel integrity would also be protected. In this study, which is the preliminary stage of RELAP5/MOD2 transient simulation of the Mannshan pressurized water reactor plants, system thermal-hydraulic response is tested first and isolated from the neutronic effects. The variation of core power versus time curve was extracted from the power test data to serve as a time varying boundary condition. The comparison of the analytical results of four major parameters (pressurizer pressure, average temperature of the core, steam dump flow rate, and feedwater flow rate) from RELAP5/MOD2 and the power test data are illustrated. The analytical results agreed reasonably well with the measured data in trend and magnitude. The pressurizer pressure is the most deviant parameter, being lower than the power test data throughout the transient.

L. Kao, L. Liao, K. Liang, S. Wang, and Y-B. Chen "Assessment of RELAP5/MOD2 Using Large-Break Loss-of-Coolant Experimental Data," *Winter meeting of the American Nuclear Society (ANS) and Nuclear Power and Technology Exhibit; San Francisco, CA, November 1989.*

The objective of this study is to provide a qualitative assessment of a major thermal-hydraulic computer code in terms of code development, code improvement, and enhancement of user guidelines. This paper summarizes best-estimate experiment analyses performed with RELAP5/MOD2 Cycle 36.04 to simulate the system thermal-hydraulic responses of the Semiscale S-06-3 and Loss-of-Fluid Test (LOFT) L2-5 large-break loss-of-coolant tests.

M. B. Keevill, *RELAP5/MOD2 Analysis of LOFT Experiment L9-4,* National Power Nuclear, Barnwood, U. K., April 1992.

As part of a program to validate RELAP5/MOD2 for use in the analysis of certain fault transients in the Sizewell "B" PWR, the code has been used to simulate experiment L9-4 carried out in the Loss-of-Fluid Test (LOFT) facility. Experiment L9-4 simulated a Loss-of-Offsite-Power Anticipated Transient Without Trip (LOOP ATWT) in which power is lost to the primary coolant pumps and main feed is lost to the steam generators but the control rods fail to insert in the reactor core. RELAP5/MOD2 generally predicted the transient well, although there were some differences compared to the test data. These differences are largely due to the use of power and flow experimental data. The most noticeable difference was that the steam generator was predicted to boil down too fast. This is believed to be partly due to errors in the RELAP5 interphase drag model. The RELAP5 calculation also showed the primary pressure to be very sensitive to the primary flow rate, making the exact simulation of primary side relief valve movements difficult to reproduce.

K. Kim and H. J. Kim, *Assessment of RELAP5/MOD2 Critical Flow Model Using Marviken Test Data 15 and 24,* Korea Inst. of Nuclear Safety, Taejon, Korea, April 1992.

The simulations of Marviken CFT 15 and 24 have been performed using RELAP5/MOD2. For the modeling of a nozzle as a pipe, the results of simulations and the CFT 15 test data are in good agreement, but the simulations underpredict by about 5 to 10% in transition region between subcooled ad two-phase. In the two-phase region, there occurs the fluctuations of the calculated mass flowrate for the case of using the critical flow model in RELAP5/MOD3. It seems that the improvement of the critical flow model in RELAP5 during the transition period is necessary. RELAP5 critical flow model underpredicts the CFT 24 data by 10 to 20% in two-phase choked flow region, while its predictions are in good agreement with subcooled choked flowrate data. The modeling of a nozzle as a pipe in the case of CFT 24 may give rise of unreasonable results in subcooled critical flow region.

K. T. Kim, B. D. Chung, I. G. Kim, and H. J. Kim, *Assessment of RELAP5/MOD3 Version 5m5 Using Inadvertent Safety Injection Incident Data of Kori Unit 3 Plant,* May 1993.

This report discusses an inadvertent safety injection incident that occurred at Kori Unit 3 in September 6, 1990. It was analyzed using the RELAP5/MOD3 code. The event was initiated by a closure of main feedwater control valve of one of three steam generators. High pressure safety injection system was actuated by the low pressure signal of main steam line. The actual sequence of plant transient with the proper estimations of operator actions was investigated in the present calculation. The asymmetric loop behaviors of the plant was also considered by nodalizing the loops of the plant into three. The calculational results are compared with the plant transient data. It is shown that the overall plant transient depends strongly on the auxiliary feedwater flowrate controlled by the operator and that the code gives an acceptable prediction of the plant behavior with the proper assumptions of the operator actions. The results also show that the solidification of the pressurizer does not occur and the liquid-vapor mixture does not flow out through pressurizer PORV. The behavior of primary pressure during pressurizer PORV actuation is poorly predicted because the actual behavior of pressurizer PORV could not be modeled in the present simulation.

S. S. Kim and J. C. McKibben, "PARET/ANL and RELAP5/MOD2 Benchmarking Comparison with the SPERT-IV Test Data," *Annual Meeting of the American Nuclear Society, Atlanta, GA, June 1989*.

Results of the PARET/ANL and RELAP5/MOD2 computations on one of the SPERT-IV tests are compared to select the code that best predicts the peak power and fuel plate temperature resulting from reactivity-induced transients for use in the University of Missouri Research Reactor (MURR) upgrade safety-related analysis. The D-12/25 core of the SPERT-IV tests was selected for comparison because the test was performed under forced coolant circulation in a low-pressure and low-temperature environment, and this test used plate-type fuel (like MURR). The square-shaped D-12/25 core consisted of a 5 x 5 array of 20 fuel assemblies, 4 control rod assemblies, and 1 transient rod assembly. Control of the reactor was accomplished by the use of four boron/aluminum control rods, and the power excursion was initiated by a step reactivity addition established by ejecting the poison section of the transient rod from the core.

J. A. Klingenfus and M. V. Parece, *Multiloop Integral System Test (MIST) Final Report: RELAP5/MOD2 MIST Analysis Comparisons*, B&W-2078-VOL-10, EPRI-NP-6480-VOL-10, December 1989.

The Multiloop Integral System Test (MIST) Facility is part of a multiphase program started in 1983 to address small break loss-of-coolant accidents (SBLOCAs) specific to Babcock & Wilcox (B&W) designed plants. MIST is sponsored by the U. S. Nuclear Regulatory Commission, the B&W Owners Group, the Electric Power Research Institute, and B&W. The unique features of the B&W design, specifically the hot leg U-bends and steam generators, prevented the use of existing integral system data or existing integral system facilities to address the thermal-hydraulic SBLOCA questions. MIST and two other supporting facilities were specifically designed and constructed for this program, and an existing facility, the Once-Through Integral System, was also used. Data from MIST and the other facilities will be used to benchmark the adequacy of system codes, such as RELAP5/MOD2 and TRAC-PF1, for predicting abnormal plant transients. The MIST Program included funding for seven individual RELAP5 pretest and posttest predictions. The comparisons against data and final conclusions are the subject of this volume of the MIST Final Report.

W. Kolar, H. Staedtke, and B. Worth, "JRC ISPRA Experience with IBM Version of RELAP5/MOD2," *14th Water Reactor Safety Information Meeting, Gaithersburg, MD, October 27, 1986,* NUREG/CP-0082, Volume 5, February 1987, pp. 305-328, Commission of the European Communities, Ispra, Italy.

Various RELAP5 code versions have been used extensively within the LOBI Project at the Joint Research Center in Ispra, Italy for test design calculations, pretest predictions, and posttest analysis. The results obtained represent an important contribution to the multi-national effort for the RELAP5 code assessment. The paper focuses mainly on RELAP5/MOD2/36.04. Problems related to the conversion of the code from Control Data Corporation (CDC) to an IBM compatible form are outlined in the paper. The prediction capability of the code is demonstrated by comparison of predicted and measured data for different LOBI integral system experiments.

C. M. Kullberg, "RELAP5 Assessment of Noncondensable Test Data for Passive Cooling Applications," *Transactions of the American Nuclear Society,* 1992.

As part of a research effort to better understand passive heat removal dynamics, a series of numerical steady-state simulations in the presence of noncondensable gases was performed to evaluate RELAP5/MOD3 against test data. This preliminary assessment was made using data from the University of California, Berkeley (UCB), natural circulation loop test facility. This paper presents work that has been used to support the U. S. Nuclear Regulatory Commission's evaluation of General Electric's simplified boiling water reactor (SBWR). The SBWR is an advanced design that relies on a passive containment cooling system (PCCS) to remove thermal loads from the dry well. The PCCS heat exchangers remove core decay power by free convection and transfer this energy to an external pool of water located above containment. To make reliable design decisions about PCCS operation, basic questions must be answered as to how steam mixed with a variety of noncondensable gases will transfer energy to its surroundings. Several relevant experimental or theoretical investigations have been conducted in the past few years to provide improved heat transfer correlations for steam in the presence of noncondensable gases. A series of tests for a scaled PCCS facility have been carried out at the UCB. One of the key objectives of the UCB program was to observe scaled steady-state operation to simulate energy removal for proposed PCCS designs. The UCB facility simulated expected containment accident conditions with pressures that ranged from 1 ~ 4 atm. These studies were used to quantify the inhibitive effect of noncondensables on steam condensation heat transfer. The application of phase-separation models results in nonrealistic flow oscillations. The use of the six-equation code RELAP5/MOD2 has improved the modeling of the physical phenomena of the investigated two-phase processes. Disturbing oscillations were not observed; the computer results to a detailed understanding in the progress of depressurization. Further model evolutions were introduced recently in RELAP5/MOD3, a further step towards best-estimate simulation of problems with two-phase flow.

J. F. Kunze, S. K. Loyalka, J. C. McKibben, R. Hultsch, and O. Olandiran, “Benchmark Evaluation of the RELAP Code to Calculate Boiling in Narrow Channels,” *Transactions of the American Nuclear Society.*

The RELAP code has been tested with benchmark experiments (such as the loss-of-fluid test experiments at the Idaho National Engineering Laboratory) at high pressures and temperatures characteristic of those encountered in loss-of-coolant accidents (LOCAs) in commercial light water power reactors. Application of RELAP to the LOCA analysis of a low pressure (< 7 atm) and low temperature (< 100 ^{o}C), plate type research reactor, such as the University of Missouri Research Reactor (MURR), the high-flux breeder reactor, high-flux isotope reactor, and Advanced Test Reactor, requires resolution of questions involving overextrapolation to very low pressures and low temperatures, and calculations of the pulsed boiling/reflood conditions in the narrow rectangular cross-section channels (typically 2 mm thick) of the plate fuel elements. The practical concern of this problem is that plate fuel temperatures predicted by RELAP5 (MOD2, Version 3) during the pulsed boiling period can reach high enough temperatures to cause plate (clad) weakening, though not melting. Since an experimental benchmark of RELAP5 under such LOCA conditions is not available and since such conditions present substantial challenges to the code, it is important to verify the code predictions. The comparison of the pulsed boiling experiments with the RELAP5 calculations involves both visual observations of void fraction versus time and measurements of temperatures near the fuel plate surface.

J. F. Kunze, S. K. Loyalka, R. A. Hultsch, O. Oladiran, and J. C. McKibben, "RELAP Simulation and Experimental Verification of Transient Boiling Conditions in Narrow Coolant Channels, at Low Temperature and Pressure," *American Nuclear Society (ANS) Topical Meeting on the Safety, Status and Future of Noncommercial Reactors and Irradiation Facilities, Boise ID, September 30 - October 4, 1990.*

This paper reports on benchmark experiments needed to verify the accuracy of thermal-hydraulic codes (such as RELAP5/MOD2) with respect to their capability to simulate transient boiling conditions both with and without a closed recirculation path in narrow channels, under essentially atmospheric pressure conditions characteristic of plate-type research reactors. An experimental apparatus with this objective has been constructed and data for surface heat flux of 1.2×10^5 W/m^2 are reported.

O. Kymaelaeinen, *The Assessment of RELAP5/MOD2 Against IVO Loop Seal Tests,* Imatran Voima Oy (IVO), Helsinki, Finland, April 1992.

RELAP5/MOD2 analyses of a full-scale and 1/10-scale atmospheric air-water loop seal facilities have been conducted. The calculations have been performed with the version 36.05 and also with a modified version with the treatment of interfacial drag changed in the loop seal bends. The calculated residual water level differs from that measured in the experiments, the computational value being lower. The gas superficial velocity needed for loop seal clearing is also predicted lower by RELAP5. The interfacial drag modifications slightly improved the results, but an agreement with the experimental data was not found.

E. T. Laats, "Nuclear Plant Analyzer Development at the Idaho National Engineering Laboratory," *14th Water Reactor Safety Information Meeting, Gaithersburg, MD, October 1986*, NUREG/CP-0082, Volume 5, February 1987, pp. 41-44.

The Nuclear Plant Analyzer (NPA) is a state-of-the-art safety analysis and engineering tool being used to address key nuclear power plant safety issues. Under the sponsorship of the U. S. Nuclear Regulatory Commission (NRC), the NPA has been developed to integrate the NRC's computerized reactor behavior simulation codes such as RELAP5, TRAC-BWR and TRAC-PWR, with well-developed computer color graphics programs and large repositories of reactor design and experimental data. An important feature of the NPA is the capability to allow an analyst to redirect a RELAP5 or TRAC calculation as it progresses through its simulated scenario. The analyst can have the same power plant control capabilities as the operator of an actual plant. The NPA resides on the dual Control Data Corporation Cyber 176 mainframe computers at the Idaho National Engineering Laboratory (INEL) and Cray-1S computers at Los Alamos National Laboratory (LANL) and Kirtland Air Force Weapons Laboratory (KAFWL). During the past year, the NPA program at the INEL has addressed two primary areas: software development and user support. These activities are discussed in the paper.

E. T. Laats, "USNRC's Nuclear Plant Analyzer: Engineering Simulation Capabilities into the 1990's," *International Nuclear Simulation Symposium and Mathematical Modeling Workshop, Schliersee, Federal Republic of Germany, October 13, 1987.*

The Nuclear Plant Analyzer (NPA) is the U. S. Nuclear Regulatory Commission's (NRC's) state-of-the-art nuclear reactor simulation capability. This computer software package integrates high fidelity nuclear reactor simulation codes such as the TRAC and RELAP5 series of codes with color graphics display techniques and advanced workstation hardware. The NPA first became operational at the Idaho National Engineering Laboratory in 1983. Since then, the NPA system has been used for a number of key reactor safety-related tasks ranging from plant operator guidelines evaluation to emergency preparedness training. The NPA system is seen by the NRC as their vehicle to maintain modern, state-of-the-art simulation capabilities for use into the 1990's. System advancements are envisioned in two areas: (a) software improvements to existing and evolving plant simulation codes used by the NPA through the use of such techniques as parallel and vector processing and artificial intelligence expert systems, and (b) advanced hardware implementations using combinations of super-, minisuper-, supermini-, and super-microcomputer system and satellite data communications networks for high flexibility and greatly increased NPA system performance.

E. T. Laats, "Nuclear Plant Analyzer Development and Analysis Applications," *International Thermal Hydraulic and Plant Operations Topical Meeting, Taipei, Taiwan, October 1984.*

The Nuclear Plant Analyzer (NPA) is being developed as the U. S. Nuclear Regulatory Commission's (NRC's) state-of-the-art safety analysis and engineering tool to address key nuclear plant safety issues. The NPA integrates the NRC's computerized reactor behavior simulation codes such as RELAP5 and TRAC-BWR, both of which are well-developed computer graphics programs and large repositories of reactor design and experimental data. Using the complex reactor behavior codes and the experiment data repositories enables simulation applications of the NPA that are generally not possible with more simplistic, less mechanistic reactor behavior codes. These latter codes are used in training simulators or with other NPA-type software packages and are limited to displaying calculated data only. This paper describes four applications of the NPA in assisting reactor safety analyses. Two analyses evaluated reactor operating procedures during off-normal operation for a pressurized water reactor and a boiling water reactor, respectively. The third analysis was performed in support of a reactor safety experiment conducted in the Semiscale facility. The final application demonstrated the usefulness of atmospheric dispersion computer codes for site emergency planning purposes. An overview of the NPA and how it supported these analyses are the topics of this paper.

E. T. Laats, "Nuclear Plant Analyzer Development at the Idaho National Engineering Laboratory," *13th Water Reactor Safety Research Information Meeting, Washington, D. C., October 1985.*

The Nuclear Plant Analyzer (NPA) is a state-of-the-art safety analysis and engineering tool being used to address key nuclear power plant safety issues. Under the sponsorship of the U. S. Nuclear Regulatory Commission (NRC), the NPA has been developed to integrate the NRC's computerized reactor behavior simulation codes, such as RELAP5, TRAC-BWR, and TRAC-PWR, with well-developed computer color graphics programs and large repositories of reactor design and experimental data. An important feature of the NPA is the capability to allow an analyst to redirect a RELAP5 or TRAC calculation as it progresses through its simulated scenario. The analyst can have the same power plant

control capabilities as the operator of an actual plant. The NPA resides on the dual Control Data Corporation Cyber-176 mainframe computers at the Idaho National Engineering Laboratory and a CRAY-1S computer at Los Alamos National Laboratory.

E. T. Laats and R. N. Hagen, "Nuclear Power Plant Simulation Using Advanced Simulation Codes through a State-of-the-Art Workstation," *Proceedings of the 1985 Summer Computer Simulation Conference, Chicago, IL, July 1985, pp. 397-401.*

The Nuclear Plant Analyzer (NPA) currently resides in a Control Data Corporation 176 mainframe computer at the Idaho National Engineering Laboratory (INEL). The NPA user community is expanding to include worldwide users who cannot consistently access the INEL mainframe computer from their own facilities. Thus, an alternate mechanism is needed to enable their use of the NPA. Therefore, a feasibility study was undertaken by EG&G Idaho, Inc. to evaluate the possibility of developing a stand-alone workstation dedicated to the NPA. The basic requirements for the workstation are the ability to (a) run the RELAP5 and TRAC-BWR nuclear reactor simulation codes (which are part of the NPA) at real wall-clock time computational speeds, (b) integrate all other NPA color graphics and data base functions, (c) assemble the necessary workstation hardware using off-the-shelf components at a total price of less than $250,000, and (d) develop the entire system in five years. A workstation of this type with these simulation codes has only been possible to date on a Class VI mainframe computer (e.g.,CRAY/XMP).

T. K. Larson and R. A. Dimenna, "Preservation of Natural Circulation Similarity Criteria in Mathematical Models," *24th National Heat Transfer Conference and Exhibition, Pittsburgh, PA, August 9, 1987.*

This paper discusses preservation of similitude criteria in current mathematical models used for transient analysis of thermal-hydraulic systems. Input models for the RELAP5 computer code were developed at the Idaho National Engineering Laboratory for two simple hypothetical natural circulation systems consisting of a closed loop containing energy generation, energy removal, and flow resistance. The two models differ significantly in geometric scale size. A reference model had components and operating conditions in a range similar to those found in typical nuclear steam supply systems, a scaled model, geometrically much smaller than the reference model, had components that were sized from the reference model using similar criteria presented in the literature. Steady-state and transient single- and two-phase natural circulation calculations were conducted using both models to determine if the model-to-model relationships in time, pressure drop, and velocity scales were in accordance with the similitude criteria. Results indicate that while the code predicts the expected fundamental effects of geometric scale, there are noteworthy differences in the details of calculations.

L. R. Laxminarayan and Y. A. Hassan, "Prediction of the MIT Steam Condensation Experiment in the Presence of Air," *Winter meeting of the American Nuclear Society (ANS), San Francisco, CA, November 1991.*

The next generator of reactors will rely on passive systems to improve the reliability of operation and management of an accident situation. One such system is passive containment cooling, which is a heat exchanger permitting the transfer of heat via steam condensation from the containment to some ultimate

heat sink such as a suppression pool or even a water pool outside the containment. This situation is typically characterized by the steam condensation in the presence of air. The Massachusetts Institute of Technology (MIT) steam condensation experiment in the presence of air is one of the experiments conducted to provide correlations for the heat transfer coefficient in the presence of noncondensable gases. This paper discusses a simulation of the experiment using the RELAP5/MOD3 thermal-hydraulic analysis code.

L. R. Laxminarayan and Y. A. Hassan, "Simulation of a Single U-tube Condensation Experiment in the Presence of Noncondensable Gases," *Winter meeting of the American Nuclear Society (ANS), San Francisco, CA, November 1991.*

Condensation phenomena play an important role in the heat transfer process of many applications. This mode of heat transfer is often used in engineering because of the high heat transfer coefficients achieved. Heat transfer by condensation is, however, impeded by the presence of noncondensable gases. The purpose of this study is to simulate an experiment to study the influence of noncondensable gases on the condensation phenomena in a single inverted U-tube condenser using the RELAP5/MOD3 thermal-hydraulic code. The U-tube condenser experiment brings out the phenomena of degradation of the condensation heat transfer in the presence of noncondensable gases. It also demonstrates the presence of two zones, i.e., the active zone with unimpeded heat transfer and the passive zone in which the condensation heat transfer is completely degraded. The active zone contains no traces of the noncondensable gas, which is completely washed down to the passive zone. This study shows the ability of the RELAP5/MOD3 code to capture these phenomena.

A. L. Lechas, *Application of Full Power Blackout for C. N. Almaraz with RELAP5/MOD2,* Central Nuclear de Almaraz, Madrid, Spain, June 1993.

The analysis group of Almaraz Nuclear Power Plant has developed a model of the plant with RELAP5/MOD2/36.04. This model is the result of the work-experience on the code RELAP5/MOD1/ that was the standard code during the period 1984-1989. Different solutions were adopted in the network to implement the RELAP5/MOD1 computer code. The first complete calculation of an accident (normal power blackout) was undertaken. All calculations presented in this report were performed on a computer CDC Cyber 180/830. The CPU time versus real time event was 22.6.

E. J. Lee, B. D. Chung, and H. J. Kim, *RELAP5 Assessment Using Semiscale SBLOCA Test S-NH-1: International Agreement Report,* Korea Inst. of Nuclear Safety, Taejon, Korea, June 1993.

2-inch cold leg break Test S-NH-1, conducted at the 1/1705 volume scaled facility Semiscale was analyzed using RELAP5/MOD2 Cycle 36.04 and MOD3 Version 5m5. Loss of HPIS was assumed, and reactor trip occurred on a low PZR pressure signal (13.1 MPa), and pumps began an unpowered coastdown on SI signal (12.5 MPa). The system was recovered by opening ADV's when the PCT became higher than 811 K. Accumulator was finally injected into the system when the primary system pressure was less than 4.0 MPa. The experiment was terminated when the pressure reached the LPIS actuation setpoint. RELAP5/MOD2 analysis demonstrated its capability to predict, with sufficient accuracy, the main phenomena

occurring in the depressurization transient, both from qualitative and quantitative points of view. Nevertheless, several differences were noted regarding the break flow rate and inventory distribution due to deficiencies in two-phase choked flow model, horizontal stratification interfacial drag, and a CCFL model. The main reason for the core to remain nearly fully covered with the liquid was the under-prediction of the break flow by the code. Several sensitivity calculations were tried using MOD2 to improve the results by using the different options of break flow modeling (downward, homogeneous, and area increase). The break area compensating concept based on "the integrated break flow matching" gave the best results than downward junction and homogeneous options. And the MOD3 showed improvement in predicting a CCFL in SG and a heatup in the core.

E-J. Lee and B-D. Chung, *ICAP (International Code Assessment and Applications Program) Assessment of RELAP5/MOD2, Cycle 36.05 Against LOFT (Loss of Fluid Test) Small Break Experiment L3-7*, April 1990.

The LOFT small break (1-inch diameter) experiment L3-7 has been analyzed using the reactor thermal hydraulic analysis code RELAP5/MOD2, Cycle 36.05. The base calculation (Case A) was completed and compared with the experimental data. Three types of sensitivity studies (Cases B, C, and D) were carried out to investigate the effects of (1) break discharge coefficient Cd, (2) pump tow phase difference multiplier, and (3) High Pressure Injection System (HPIS) capacity on major thermal-hydraulic (T/H) parameters. A nodalization study (Case E) was conducted to assess the phenomena with a simplified nodalization. The results indicate that Cd of 0.9 and 0.1 fit to the single discharge flow rate of Test L3-7 best among the tried cases. The pump two-phase multiplier has little effect on the T/H parameters because of the low discharge flow rate and the early pump coast down in this smaller size SBLOCA. But HPIS capacity has a very strong influence on parameters such as pressure, flow and temperature. It is also shown that a simplified nodalization could accommodate the dominant T/H phenomena with the same degree of code accuracy and efficiency.

E. J. Lee and B. D. Chung, *Assessment of RELAP5/MOD2, Cycle 36.04 Using LOFT Intermediate Break Experiment L5-1,* Korea Inst. of Nuclear Safety, Taejon, Korea, April 1992.

This documents the LOFT intermediate break experiment L5-1, which simulates 12-inch diameter ECC line break in a typical PWR, and has been analyzed using the reactor thermal-hydraulic analysis code RELAP5/MOD2, Cycle 36.04. The base calculation, which modeled the core with single flow channel and two heat structures without using the options of reflood and gap conductance model, has been successfully completed and compared with experimental data. Sensitivity studies were carried out to investigate the effects of nodalization at reactor vessel and core modeling on major thermal hydraulic parameters, especially on peak cladding temperature (PCT). These sensitivity items are: single flow channel and single heat structure (Case A), two flow channel and two heat structures (Case B), reflood option added (Case C) and both reflood and gap conductance options added (Case D). The code, RELAP5/MOD2 Cycle 36.04 with the base modeling, predicted the key parameters of LOFT LBLOCA Test L5-1 better than Cases A, B, C, and D. Thus, it is concluded that the single flow channel modeling for core is better than the two flow channel modeling and two heat structure is also better than single heat structure modeling to predict PCT at

the central fuel rods. It is recommended to use the reflood option and not to use gap conductance option for this L5-1 type LBLOCA.

E. J. Lee, B, D. Chung, and H. J. Kim, *RELAP5/MOD3 Assessment Using the Semiscale 50% Feed Line Break Test S-FS-11,* Korea Inst. of Nuclear Safety, Taejon, Korea, June 1993.

The RELAP5/MOD3 5m5 code was assessed using the 1/1705 volume scaled Semiscale 50% Feed Line Break (FLB) test S-FS-11. Test S-FS-11 was designed in three phases; (a) blowdown phase, (b) stabilization phase, and (c) refill phase. The first objective was to assess the code applicability to 50% FLB situation, the second was to evaluate the FSAR conservatism regarding SG heat transfer degradation, steam line check valve failure, break flow state, and peak primary system pressure, and the third was to validate the EOP effectiveness. The code was able to simulate the major T/H parameters except for the two-phase break flow and the secondary convective heat transfer rate. The two-phase break flow still had deficiencies. The current boiling heat transfer rate was developed from the data for flow inside of a heated tube, not for flow around heated tubes in a tube bundle. Results indicated that the assumption of 100% heat transfer until the liquid inventory depletion was not conservative, the failed affected steam generator main steam line check valve assumption was not conservative either, the measured break flow experienced all types of flow conditions, the relative proximity to the 110% design pressure limit was conservative. The automatic actions during the blowdown phase were effective in mitigating the consequences. The stabilization operation performed by operator actions were effective to permit natural circulation cooldown and depressurization. The voided secondary refill operations also verified the effectiveness of the operations while recovering the inventory in a voided steam generator.

S. Lee and H. J. Kim, *RELAP5 Assessment of Direct Contact Condensation in Horizontal Cocurrent Stratified Flow,* Korea Inst. of Nuclear Safety, Taejon, Korea, April 1992.

Assessment on the direct-contact condensation model was carried out using the RELAP5/MOD2 Cycle 36.04 and the RELAP5/MOD3 Version 5m5 codes. The test data were obtained from the experiments at Northwestern University, which involved the horizontal cocurrent stratified steam/water flow in a rectangular channel. A nodalization sensitivity study and a simulation with a fixed interfacial area, same as test section, were also carried out to examine the effect of the interfacial area, same as test section, were also carried out to examine the effect of the interfacial heat and mass transfer. The results showed that the RELAP5 code model under the horizontal stratified flow regime predicted the condensation rate well, though some discrepancies with experimental results were found in water layer thickness and local heat transfer coefficient especially when there was a wavy interface. The interfacial wave structure was found to play an important role in describing the interfacial heat and mass transfer, as obtained in the experiment.

S. Lee, B. D. Chung, and H. J. Kim, *Assessment of BETHSY Test 9.1.b Using RELAP5/MOD3,* Korea Inst. of Nuclear Safety, Taejon, Korea, June 1993.

The 2-inch cold leg break Test 9.1.b, conducted at the BETHSY facility was analyzed using the RELAP5/MOD3 Version 5m5 code. The Test 9.1.b was conducted with the main objective being the

investigation of the thermal-hydraulic mechanisms responsible for the large core uncovery and fuel heatup, requiring the implementation of an ultimate procedure. The present analysis demonstrates the code's capability to predict, with sufficient accuracy, the main phenomena occurring in the depressurization transient, both from a qualitative and quantitative point of view. Nevertheless, several differences regarding the evolution of phenomena and affecting the timing order have to be pointed out in the base calculation. Three calculations were carried out to study the sensitivity to change the nodalization in the components of the loop seal crossover legs, and of the auxiliary feedwater control logic, and of the break discharge coefficient.

S. Lee, B. D. Chung, and J. J. Kim, *RELAP5 Assessment Using LSTF Test Data SB-CL-18,* Korea Inst. of Nuclear Safety, Taejon, Korea, May 1993.

A 5% cold leg break test, run SB-CL-18, conducted at the Large Scale Test Facility (LSTF) was analyzed using the RELAP5/MOD2 Cycle 36.04 and the RELAP5/MOD3 Version 5m5 codes. The test SB-CL-18 was conducted with the main objective being the investigation of the thermal-hydraulic mechanisms responsible for the early core uncovery, including the manometric effect due to an asymmetric coolant holdup in the steam generator upflow nd downflow side. The present analysis, carried out with the RELAP5/MOD2 and MOD3 codes, demonstrates the code's capability to predict, with sufficient accuracy, the main phenomena occurring in the depressurization transient, both from a qualitative and quantitative point of view. Nevertheless, several differences regarding the evolution of phenomena and affecting the timing order have been pointed out in the base calculations. The sensitivity study on the break flow and the nodalization study in the components of the steam generator U-tubes and the crossover legs were also carried out. The RELAP5/MOD3 calculation with the nodalization change resulted in good predictions of the major thermal-hydraulic phenomena and their timing order.

Y. J. Lee, B. D. Chung, and H. J. Kim, “Analysis of Kori 1 Station Blackout Accident for RELAP5/MOD2 Assessment,” *Third International Topical Meeting on Nuclear Power Plant Thermal Hydraulics and Operations, Seoul, Korea, November 1988*, Korea Advanced Energy Research Institute.

The station blackout accident at 77.5% power that occurred on June 9, 1981 at the Kori Unit 1 pressurized water reactor (PWR) is simulated using the RELAP5/MOD2 system thermal hydraulic computer code. Major thermal-hydraulic parameters are compared with the available plant data. The establishment of the natural circulation following the trips of both coolant pumps is confirmed. The calculated reactor coolant flow rate closely approximates the plant data validating the relevant thermal-hydraulic models of RELAP5/MOD2. Results also show that the supply of auxiliary feedwater without the operation of the steam generator power-operated relief valves (S/G PORVs) is sufficient for removing the decay heat of the core. A postulated station blackout accident with the similar sequence of events as the one described above is analyzed. The results confirm that the safety of Kori 1 is secured by the actuation of S/G PORVs coupled with the supply of auxiliary feedwater. The comparison of the analysis results with the plant data demonstrates that the RELAP5/MOD2 code has the capability to simulate the thermal-hydraulic behavior of PWRs under accident conditions of this type with accuracy. It is also recognized that for best-estimate based transient analyses, the characteristics of such non-safety related components as the

turbine stop valve closing time, and S/GPORV setpoints have significant impact on the results; thus, the accuracy with which they are simulated is important.

K. S. Liang, L. Kao, L. Y. Liao, and Y. B. Chen, "Best Estimate Analysis of Recirculation Pump Suction Like Small-Break LOCA of Kuosheng BWR-6 Nuclear Power Plant," *Third International Topical Meeting on Nuclear Power Plant Thermal Hydraulics and Operations, Seoul, Korea, November 1988,* Institute of Nuclear Energy Research, Taiwan.

A simulation model of the Kuosheng BWR/6 Power Plant is developed using the RELAP5/MOD2 code to investigate the system thermal response and define necessary operator actions during a recirculation suction line small break (0.2 ft^2) loss-of-coolant accident (LOCA) with or without the assumption of safety system failures. The calculation results show that even with the safety system failures assumed, the plant can successfully withstand the small break LOCA. The high-pressure systems must fail to cause a partial core heatup. The results also show that the function of the automated depressurization system plays an important role in mitigation of the consequences of the small break LOCA.

K. S. Liang, L. Kao, L. Y. Liao, and Y. B. Chen, "Assessment of the RELAP5/MOD2 Code Using MSIV Fast Closure Test Data of Kuosheng BWR-6 Nuclear Power Plant," *Third International Topical Meeting on Nuclear Power Plant Thermal Hydraulics and Operations, Seoul, Korea, November, 1988,* Institute of Nuclear Energy Research, Taiwan.

The water level tracing capability of computer codes is important for light water reactor simulation [especially for boiling water reactors (BWRs)] to estimate water inventory remaining during either transitory or accidental conditions. RELAP5/MOD2 has been extensively applied in pressurized water reactors, but less frequently applied to BWRs. In this paper, a set of plant test data of the Taipower's Kuosheng Nuclear Power Plant, a BWR-6 Mark-III containment plant, is used to assess the BWR modeling capability of RELAP5/MOD2, particularly for water level prediction. Because the main station isolation valve (MSIV) fast closure event occasionally occurred during operation and because it will cause water levels to change heavily, the test of MSIV fast closure is adopted. Through comparisons, it was observed that results produced by RELAP5 simulation are in good agreement with the test data.

K-S. Liang, L-H. Liao, and Y-B. Chen, "Assessment of RELAP5/MOD2 Using Semiscale Small Break S-NH-1 Experiment Data," Institute of Nuclear Energy Research, Taiwan, *ANS Proceedings 1988 Natural Heat Transfer Conference, HTC-Vol. 3, Houston, TX, July 1988.*

This paper presents the results of the RELAP5/MOD2 posttest assessment utilizing Semiscale S-NH-1 small break loss-of-coolant accident (LOCA) test which was performed in the Semiscale Mod-2C facility. Test S-NH-1 was a 0.5% small break LOCA where the high-pressure injection system was assumed inoperable throughout the transient. Through comparisons between data and best-estimate RELAP5 calculation, the capabilities of RELAP5 to calculate the transient phenomena are assessed.

L. Liao, L. Kao, K. Laing, S. Wang, and Y-B, Chen "An Improvement in RELAP5/MOD2 Heat Transfer Calculation During Reflood", *Winter Meeting of the American Nuclear Society (ANS) and Nuclear Power and Technology Exhibit; San Francisco, CA, November 1989.*

Analyses of two large-break loss-of-coolant-accident (LOCA) experiments, namely, LOFT L2-5 and Semiscale S-06-3, were performed with RELAP5/MOD2/cy 36.04. Excessive cooling, which occurred right before final quench, has been found in both calculations. The causes of the excessive cooling may be quite complex during large-break LOCA calculation. Among all the possible reasons, improper modeling of the heat transfer calculation in the reflood heat transfer package has been identified as a large contributor to the discrepancy between calculated and measured cladding temperatures. The extension of the correlations to the conditions far beyond the applicable ranges of the correlations and the usage of partition factor in determining total heat transfer coefficient are the two aspects that will be improved in this study. A flow-regime heat transfer modeling has been incorporated into the RELAP5/MOD2 reflood heat transfer package. A brief description of the original model, the revised model, and the results from these two models are presented in this paper.

L. Liao, *Study and Application of Boiling Water Reactor Jet Pump Characteristic,* January 1992.

RELAP5/MOD2 is an advanced thermal-hydraulic computer code used to analyze plant response to postulated transient and loss-of-coolant accidents in light water nuclear reactors. Since this computer code was originally developed for pressurized water reactor transient analysis, some of its capabilities are questioned when the methods are applied to a boiling water reactor. One of the areas which requires careful assessment is the jet pump model. In this paper, the jet pump models of RELAP5/MOD2, RETRAN-02/MOD3, and RELAP5/MOD3 are compared. From an investigation of the momentum equations, it is found that the jet pump models of these codes are not exactly the same. However the effects of the jet pump models on the M-N characteristic curve are negligible. In this study, it is found that the relationship between the flow ratio, M, and the head ratio, N, is uniquely determined for a given jet pump geometry provided that the wall friction and gravitational head are neglected. In other words, under the given assumptions, the M-N characteristic curve will not change with power, level, recirculation pump speed or loop flow rate. When the effects of wall friction and gravitational head are included, the shape of the M-N curve will change. For certain conditions, the slope of the M-N curve can even change from negative to positive. The changes in the M-N curve caused by the separate effects of the wall friction and gravitational head will be presented. Sensitivity studies on the drive flow nozzle form loss coefficients, Kd, the suction flow junction form loss coefficients, Ks, the diffuser form loss coefficient, Kc, and the ratio of different flow areas in the jet pump are performed. Finally, useful guidelines will presented for plants without a plant specific M-N curve.

J. C. Lin, R. A. Riemke, V. H. Ransom, and G. W. Johnsen, "RELAP5/MOD2 Pressurizer Modeling," *ASME Winter Meeting, New Orleans, LA, December 1984.*

The objective of this paper is to present the RELAP5/MOD2 models for describing repressurization transients and to report the developmental assessment results obtained through simulation of several separate effects experiments. RELAP5/MOD2 contains improved modeling features that provide a generic

pressurized water reactor transient simulation capability. In particular, the nonequilibrium capability has been generalized to include repressurization transients in which subcooled liquid and superheated vapor may coexist in the pressurizer and/or other locations in the primary coolant system. The assessment shows that RELAP5/MOD2 calculated results are in good agreement with data and the nonequilibrium phenomena for repressurization transients are properly modeled.

C. Llopis, A. Casals, J. Perez, and R. Mendizabal, *Assessment of RELAP5/MOD2 Against a 10% Load Rejection Transient from 75% Steady-State in the Vandellos II Nuclear Power Plant,* Consejo do Seguridad Nuclear, Madrid, Spain, May 1993.

The Consejo de Seguridad Nuclear (CSN) and the Asociacion Nuclear Vandellos have developed a model of Vandellos II Nuclear Power Plant. The ANV collaboration consisted in the supply of design and actual data, the cooperation in the simulation of the control systems and other model components, as well as in the results analysis. The obtained model has been assessed against the following transients occurred in plant: a trip from the 100% power level (CSN); a load rejection from 100% to 50% (CSN); a load rejection from 75% to 65% (ANV). This copy is a report of the load rejection from 75% to 65% transient simulation. This transient was one of the tests carried out in Vandellos II NPP during the startup tests.

C. Llopis, R. Mendizabal, and J. Perez, *Assessment of RELAP5/MOD2 Against a Load Rejection From 100% to 50% Power in the Vandellos II Nuclear Power Plant: International Agreement Report,* Consejo de Seguridad Nuclear, Madrid, Spain, June 1993.

As assessment of RELAP5/MOD2 Cycle 36.04 against a load rejection from 100% to 50% power in Vandals II NPP (Spain) is presented. The work is inscribed in the framework of the Spanish contribution to the ICAP Project. The model used in the simulation consists of a single-loop, a steam generator and a stem line up to the steam header all of them enlarged on a scale of 3:1, and full-scaled reactor vessel and pressurizer. The results of the calculations have been in reasonable agreement with plant measurements.

C. Llopis, J. Perez, and R. Mendizabal, *Assessment of RELAP5/MOD2 Against a Turbine Trip from 100% Power in the Vandellos Nuclear Power Plant,* Consejo de Seguridad Nuclear, Madrid, Spain, June 1993.

An assessment of RELAP5/MOD2 cycle 36.04 against a tube trip from 100% power in the Vandellos II NPP (Spain) is presented. The work is inscribed in the framework of the Spanish contribution to the ICAP Project. The model used in the simulation consists of a single-loop, a steam generator and a steam line up to the steam header all of them enlarged on a scale of 3:1; and full-scaled reactor vessel and pressurizer. The results of calculations have been in reasonable agreement with plant measurements. An additional study has been performed to check the ability of a model in which all the plant components are full-scaled to reproduce the transient. A second study has been performed using the homogeneous equilibrium model in the pressurizer, trying to elucidate the influence of the velocity slip in the primary depressurization rate.

C. Llopis, A. Casals, J. Perez, and R. Mendizabal, *Assessment of RELAP5/MOD2 Against a Main Feedwater Turbopump Trip Transient in the Vandellos II Nuclear Power Plant,* Consejo de Seguridad Nuclear, Madrid, Spain, December 1993.

The Consejo de Seguridad Nuclear (CSN) and the Asociacion Nuclear Vandellos (ANV) have developed a model of Vandellos II Nuclear Power Plant. The ANV collaboration consisted in the supply of design and actual data, the cooperation in the simulation of the control systems and other model components, as well as in the results analysis. The obtained model has been assessed against the following transients occurred in plant: A trip from the 100% power level (CSN); a load rejection from 100% to 50% (CSN); a load rejection from 75% to 65% (ANV); and, a feedwater turbopump trip (ANV). This copy is a report of the feedwater turbopump trip transient simulation. This transient actually occurred in the plant on June 19, 1989.

G. G. Loomis and J. E. Streit, *Results of Semiscale MOD-2C Small-Break (5%) Loss-of-Coolant Accident Experiment S-LH-1 and S-LH-2*, NUREG/CR-4438, EGG-2424, November 1985.

Two experiments simulating small break (5%) loss-of-coolant accidents (5% SBLOCAs) were performed in the Semiscale MOD-2C facility. These experiments were identical except for downcomer-to-upper-head bypass flow (0.9% in Experiment S-LH-1 and 3.0% in Experiment S-LH-2) and were performed at high pressure and temperature [15.6 MPa (2262 psia) system pressure, 37 K (67°°F) core differential temperature, 595 K (610°°F) hot leg fluid temperature]. From the experimental results, the signature response and transient mass distribution are determined for a 5% SBLOCA. The core thermal hydraulic response is characterized, including core void distribution maps, and the effect of core bypass flow on transient severity is assessed. Comparisons are made between post-experiment RELAP5 calculations and the experimental results, and the capability of RELAP5 to calculate the phenomena is assessed.

G. G. Loomis and J. E. Streit, *Quick Look Report for Semiscale MOD-2C Experiments S-LH-1 and S-LH-2*, EGG-SEMI-6884, May 1985.

Results from a preliminary analysis of Semiscale Tests S-LH-1 and S-LH-2 are presented. Both experiments were 5%, cold leg, centerline pipe break, loss-of-coolant accident simulations. The only difference was the downcomer to upper head bypass flow. Phenomena of interest included two core liquid level depressions with minor core rod temperature excursions. The first liquid level depression was induced by a manometric balance formed by a liquid seal in the pump suctions of both loops, and the second level depression was due to core liquid boiloff. Pump suction seal clearing mitigated the first core heatup. Comparisons are made between a pretest RELAP5 calculation and S-LH-1 data. RELAP5 calculated the manometric core level depression but not the core rod heatups.

G. G. Loomis, T. K. Larson, and J. E. Streit, "Natural Circulation Cooling During a Small-Break Loss-of-Coolant Accident in a Simulated Pressurized Water Reactor," *ASME International Symposium on Natural Circulation, Boston, MA, December 17, 1987*.

The paper presents experiment results from a simulated small break loss-of-coolant accident (SBLOCA) involving natural circulation core heat rejection mechanisms. The experiment results are compared to pre-experiment RELAP5/MOD2 calculations, and are related to expected pressurized water reactor (PWR) behavior during SBLOCA conditions. The simulation conducted in the Semiscale MOD-2C scaled-experiment facility was a 0.5% cold leg centerline break performed at high temperature and pressure with initial conditions typical of a PWR (15.6 MPa pressure, 587 K hot leg fluid temperature). The Semiscale MOD-2C facility represents all major components of a large PWR; the facility includes active loops, steam generators, and a vessel with an electrically heated core. The transition from forced circulation to the various modes of natural circulation was characterized in the Semiscale simulation. The natural circulation cooling modes observed include single-phase, two-phase, and reflux. Analysis included extensive decoupling of natural circulation heat rejection modes between the loops, and multi-dimensional effects within the steam generator U-tube. A comparison of RELAP5/MOD2 calculation with the data shows correct qualitative calculations of the occurrence of single-phase, two-phase, and reflux cooling during the Semiscale transient. Analysis of similitude criteria for the Semiscale facility suggests that the Semiscale results preserve the first-order effects thought important for natural circulation phenomena expected in a PWR.

M. F. Lozano et al., *Assessment of Full Power Turbine Trip Start-up Test for C. Trillo 1 with RELAP5/MOD2*, Consejo de Seguridad Nuclear, Madrid, Spain, July 1993.

C. Trillo I has developed a model of the plant with RELAP5/MOD2/36.04. This model will be validated against a selected set of start-up tests. One of the transients selected is the turbine trip, which presents very specific characteristics that make it significantly different from the same transient in other PWRs of different design, the main difference being that the reactor is not tripped; a reduction in primary power is carried out instead. Pre-test calculations were done of the Turbine Trip Test and compared against the actual test. Minor problems in the first model, especially in the control and limitation systems, were identified and post-test calculations had been carried out. The results show a good agreement with data for all the compared variables.

S. Lucas, T. Hudson, and M. Pope, "Comparison of a RELAP5/MOD2 Thermal-Hydraulic Model to Plant Data for a Turbine Trip Test," *Transactions of the American Nuclear Society, 55,* 1987, pp. 697-698.

Shearon Harris Unit One is a three-loop Westinghouse 2,775-MW (thermal) nuclear power plant owned and operated by Carolina Power & Light Company. A RELAP5/MOD2/36.04 thermal-hydraulic model of Unit One has been constructed to support operations and probabilistic risk analysis. The three-loop model used in this study has 162 volumes and 175 junctions. At the present time, the model has control systems for the steam dump system, pressurizer level control, steam generator level, secondary mass inventory, primary average temperature, and various trips. To validate the model, the turbine trip startup test was chosen for the benchmark comparison. The model was initialized at 97% thermal power, since this was the power at which the turbine trip test was performed. The results of the comparisons from the test indicate that the model does reasonably well in reproducing plant response. Additional plant parameters such as pressurizer level, steam generator level, and steam line pressure also compare favorably

to plant data. Immediate plans include using the model for probabilistic risk assessment success criteria and incorporating additional controllers and trips. Additional comparison to plant data will also be performed.

D. Luebbesmeyer, *Post-Test-Analysis and Nodalization Studies of OECD LOFT Experiment LP-LB-1 with RELAP5/MOD2 Cy36-02*, Paul Scherrer Inst. (PSI), Villigen, Switzerland, March 1991.

Experiment LP-LB-1 was conducted on February 3, 1984, in the Loss-Of-Fluid-Test (LOFT) facility at the Idaho National Engineering Laboratory under the auspices of the OECD. It simulated a double-ended offset shear of one inlet pipe in a four-loop PWR and was initiated from conditions representative of licensing limits in a PWR. Additional boundary conditions for the simulations were loss of offsite power, rapid primary coolant pump coastdown, and U. K. minimum safeguard emergency core coolant injection rates. This report presents the results and analysis of ten post-test calculations of the experiment LP-LB-1 by using the RELAP5/MOD2 cy3602 computer code with different nodalizations; these calculations have been performed within the International Code Assessment Program (ICAP). Starting the `standard nodalization' as more or less used by the code developers at EG&G Idaho, Inc., for different nodalization studies, we have reduced the number of volumes and junctions (especially in the pressurizer, the steam generator secondary side, and the intact loop) as well as the number of radial zones in the fuel rods. Generally, the code has calculated most of the thermal-hydraulic parameters of the LOFT-experiment LP-LB-1 within an accuracy of approximately $\pm$ 20%, but always has underpredicted the cladding temperatures up to a value of 150 K. Except for the cladding temperatures, only small discrepancies have been observed between the results of calculations using different nodalizations. The time behaviors of the cladding temperatures have been significantly affected by the chosen nodalizations but surprisingly, the results for the cases with a reduced number of volumes and junctions seem to be slightly closer to the experimental data.

D. Luebbesmeyer, *Post-test-Analysis and Nodalization Studies of OECD LOFT Experiment LP-02-6 with RELAP5/MOD2 Cy36-02*, Paul Scherrer Inst. (PSI), Villigen, Switzerland, August 1992.

Experiment LP-02-6 was conducted on October 3, 1983. It was the first large-break loss-of-coolant accident (LOCA) simulation and the fourth experiment all conducted in the Loss-of-Fluid-Test (LOFT) facility at the Idaho National Engineering Laboratory under the auspices of the OECD. This experiment, which was designed to meet requirements outlined by the USNRC as specified in the OECD LOFT Project Agreement, simulated a double-ended offset shear of a commercial pressurized water reactor (PWR) main coolant inlet pipe coincident with loss of offsite power. Experiment LP-02-6 addressed the response of a PWR to conditions closely resembling a USNRC “Design Basis Accident” in that prepressurized fuel rods were installed and minimum U. S. emergency coolant injections were used. This report presents the results and analysis of nine posttest calculations of the experiment LP-02-6 by using the RELAP5/MOD2 cy36-02 computer code with different nodalization; these calculations have been performed within the International Code Assessment Program (ICAP). Starting with a “standard nodalization” as more or less used by the code developers at EG&G Idaho, Inc., we have reduced the number of volumes and junctions as well as the number of radial zones in the fuel rods, for different nodalization studies. Generally, the code has

calculated most of the thermal-hydraulic parameters of the LOFT experiment within an accuracy of approximately ± 20%. For the cladding temperatures, these deviations are sometimes higher, but the code has never underpredicted the peak cladding temperatures significantly. Except for the cladding temperatures, only small discrepancies have been observed for the other main parameters of the results of runs using different nodalizations but reduced numbers of volumes and junctions usually have led to a decreased running time for the problem. The time behaviors of the cladding temperatures have been significantly affected by the chosen nodalizations.

H. Makowitz and W. H. Gray, "Investigation of Time Step Insensitivity for RELAP5/MOD2 SBLOCA Simulations," *Transactions of the American Nuclear Society, 55*, 1987, pp. 363-364.

Time step insensitivity, accuracy, and temporal convergence have been demonstrated for a small break loss-of-coolant accident (SBLOCA) simulation using the production version of RELAP5/MOD2 for a maximum time step Δt max of 0.01 less than or equal to Δt max less than or equal to 0.125 second for a 200 second calculation. An improved, generalized, underrelaxation scheme has been developed where the underrelaxation parameter is only a function of the Courant number, Nc. This new underrelaxation scheme allows the RELAP5/MOD2 code to execute using larger time steps, limited only by the material Courant limit and mass error considerations. Temporal convergence, accuracy, and time step insensitivity for this new scheme have been demonstrated using maximum time step values, Δt max, of 0.01, 0.125, and 2.0 seconds for 200 seconds of the SBLOCA problem simulations. The authors plan to extend this study to 1,000 seconds simulations and to investigate round-off error propagation associated with performing RELAP5 SBLOCA calculations on computers of different word sizes. They also plan to accommodate flow reversal and extend the new underrelaxation scheme to the region where Δt is less than or equal to 0.05 second.

H. Makowitz and R. J. Wagner, "Progress with Algorithm and Vector/Parallel Enhancements for RELAP5/MOD2 Thermal-Hydraulic System Simulation Code," *International Topical Meeting on Advances in Reactor Physics, Mathematics and Computation, Paris, France, April 27-30, 1987.*

Earlier experience resulting from attempts to develop a parallel implementation and a vector implementation for RELAP5/MOD1 using supercomputers resulted in an analysis suggesting a five to ten times performance enhancement for future versions of the code. The MOD2 version of the code, presently available, uses a six equation model (vs. five equations in MOD1) with the option of a semi-implicit or nearly-implicit numerical solution scheme. The nearly-implicit numerical scheme violates the convective (material) Courant limit. The RELAP5/MOD2 code has been implemented on Control Data Corporation Cyber 176, CRAY 1S, and CRAY X-MP/48 computers. Algorithm performance enhancements and vector performance improvements have been measured and are analyzed for these three computing machines. The reactor small-break loss-of-coolant problem used in previous studies was employed as the basis for the present analysis. Previous studies performed to compare the performance of algorithms in MOD2 are compared to MOD1, using the two presently available numerical methods in MOD2. Planned vector and parallel enhancements are discussed in the context of past studies and expected future performance gains.

Applicability of the RELAP5 code to best-estimate real time simulations and nuclear power plant simulators is discussed.

H. Makowitz, "The CERBERUS Code: Experiments with Paralleled Processing using RELAP5/MOD3," *Winter Meeting of the ANS and Nuclear Power and Technology Exhibit; San Francisco, CA, November 1989.*

CERBERUS, a six-equation parallel thermal-hydraulic system simulation code, is being developed at the Idaho National Engineering Laboratory (INEL). CERBERUS Ver.00 performs parallel computations only for the heat transfer model. It is projected that CERBERUS Ver.01 will have a parallel heat transfer and hydraulic module, excluding the matrix solver, and CERBERUS Ver.02 will contain Ver.01 plus the solver. Three implementations of the CERBERUS Ver.00 code with constructs of varying overhead have been developed using a META language. These implementations are under study on shared-memory Cray-like computer architectures. Results for the hybrid code version, which utilized all three construct sets simultaneously (i.e., CRAY AUTO, MICRO and MULTI TASKING) on 2- and 8-CPU Cray machines, indicate the importance of load balancing for overhead reduction, and indicate that greater speedup factors may be achievable than previously believed with a RELAP-based parallel code. Extrapolations based on Y-MP/832 overhead measurements indicate that a speedup factor of > 10 may be obtainable with the CERBERUS Ver.02 code on a 16-CPU machine.

M. L. Marinov, B. D. Dimitrov, and E. L. Popov, "Some Aspects of Testing of Two-Phase Models in the RELAP-5/2 Code," *Atomnaya Energiya, Vol. 71*, No. 3, September 1991, pp. 255-259.

Energy operation associated with a rupture of the first circuit of VVER pressurized-water reactor is characterized by such thermal-hydraulic processes as outflow on one- and two-phase coolants, a heat-transfer crisis under unsteady conditions, and heat transfer in the supercritical region. Modern codes use suitable models and correlations to describe these phenomena. The correlations are continually improved through extensive code testing in various laboratories. In order to obtain a more adequate description of emergency processes, substantiation must be given for a corresponding test program consisting of model problems that prove the universality of the algorithms. This paper compares data calculated from the RELAP5/MOD2 code with experimental data. The latter were obtained for steady-state conditions on simple experimental sections; this procedure makes possible a more thorough understanding of thermodynamic process and the models that describe them. The main goals of this testing are to use the RELAP5/MOD2 program to determine the accuracy of predictions of heat transfer in the subcritical region, the pressure gradient in two-phase flow, and pressure losses in cases of expansion or contraction of the channel.

R. P. Martin, "Conversion of RELAP5 Input Data to PC (Personal Computer) Spread Sheet for Steady-State Hydraulic Analysis," *Transactions of the American Nuclear Society, 61,* June 1990, pp. 442-443.

An initial stage for any thermal-hydraulic system analysis is to derive the conditions that define steady-state operation. Often, complicated codes are utilized for this task; however, this represents unnecessary computational effort, since deriving steady-state performance is relatively simple task.

Incorporating a few correlations that describe specific behavior of a system into common personal computer spreadsheet software can be a useful tool in performing this task. One application of spread sheets is for generating steady-state hydraulic analysis of a system containing a single-phase fluid. Model developers can benefit from an additional source of information about the system and medium for quick examination of potential model changes that this mechanism provides. This reduces the time the developer must spend and the computer usage needed to verify a models quality. The discussion presents a method and results for using information from RELAP5 to create a spread sheet of a full- of separate-effects system.

R. P. Martin, *RELAP5 Thermal-Hydraulic Analysis of the WNP1 Pressurized Water Reactor,* EGG-2633, May 1991.

Thermal-hydraulic analyses of five hypothetical accident scenarios were performed with the RELAP5/MOD3 computer code for the Babcock and Wilcox Company Washington Nuclear Project Unit 1 (WNP1) pressurized water reactor. This work was sponsored by the U. S. Nuclear Regulatory Commission (NRC) and is being performed in conjunction with future analysis work at the NRC Technical Training Center in Chattanooga, Tennessee. The accident scenarios were chosen to assess and benchmark the thermal-hydraulic capabilities of the Technical Training Center WNP1 simulator to model abnormal transient conditions.

R. P. Martin, "Benchmarking Assessment of RELAP5/MOD3 for the Low Flow and Natural Circulation Experiment," *NURETH Conference, Salt Lake City, UT, September 21-24, 1992.*

The RELAP5/MOD3 code was assessed against experimental thermal hydraulics data for a 12.5 foot test section comprised of two vertical concentric tubes with water flowing upward in the tubes. The inner tube was stainless steel and uniformly heated. The other tube was transparent polycarbonate (lexan) and unheated. The experimental procedure incorporated a test matrix of 24 tests to address single- and two-phase flow, forced and natural circulation flow and heated and unheated fluid. The tests were conducted at system pressures of 14.7 and 17.0 psia. Nine of the tests representing the full range of test conditions were analyzed using RELAP5/MOD3. RELAP5/MOD3 analysis of the tests yielded general agreement with experiment with regard to the prediction of forced flow and natural circulation trends. However, a number of deficiencies were observed in the RELAP5/MOD3 treatment and these along with recommendations for their resolution, are described in the paper.

R. P. Martin and G. W. Johnsen, "Coupling of RELAP5/MOD3 to CONTAIN for ALWR Analysis," *Twenty-First Water Reactor Safety Meeting, Bethesda, MD, October 25-27, 1993.*

The motivation for the union of these two computer codes stems from the unique safety analysis challenge presented by the new Advanced Light Water Reactor (ALWR) conceptual designs. Incorporated into many of these designs are requirements for long term passive cooling systems integrating both mechanisms in the main reactor coolant system and in the containment. Westinghouse's AP600 and General Electric's SBWR are two examples of designs that meet this description. The prospect of coupling RELAP5/MOD3 and CONTAIN introduces a new dimension in best-estimate nuclear power plant systems

analysis. Both RELAP5/MOD3 and CONTAIN are tools based on "first principles physics" addressing transient thermal-hydraulic and containment response issues, respectively. The integration of these two computer codes advances the state-of-the-art of best-estimate systems analysis of nuclear power plants by linking the two-fluid, six equation, nonequilibrium, nonhomogeneous thermal-hydraulic models of RELAP5 with the unique containment models of CONTAIN. A new feature is being implemented into RELAP5/MOD3 that creates a data communication port for the transmission of data to and from RELAP5/ MOD3 and CONTAIN. The implementation of this feature into RELAP5/MOD3 has been designed to be general to accommodate future coupling links to other codes. This feature relies on the data communication function of the Parallel Virtual Machine (PVM) software. New coding in RELAP5/MOD3 reads information concerning with what code to communicate (i.e., CONTAIN), data to send, data to receive, and how often to execute the data transmission. The new RELAP5/MOD3 input for this feature requires a time-dependent table of the communication frequency for both sending from RELAP5 and receiving by RELAP5, a table of the RELAP5 variables that will serve as sources to CONTAIN, and a table of RELAP5 variables that will provide boundary conditions that have been defined by CONTAIN. CONTAIN does not require new input, it receives any information it needs from RELAP5/MOD3. Data received by RELAP5/MOD3 is introduced into source tables utilized by the TMDPVOL and TMDPJUN components and heat structures. This limits the information that can be introduced into a RELAP5 problem to those variables that can be defined as a source by those components (i.e., pressure, temperature, internal energy, flow rates, etc.). Any variable in RELAP5/MOD3 is available to send out to an external code. Data received by CONTAIN is introduced by a mechanism similar to that for introducing sources through input.

B. Mavko, I. Parzer, and S. Petelin, "A Modeling Study of the PMK-NVH Integral Test Facility," *Nuclear Technology*, February 1994.

A way of modeling the PMK-NVK integral test facility with RELAP5 thermal-hydraulic code is presented. Two code versions, MOD2/36.05 and MOD3 5m5, are compared and assessed. Modeling is demonstrated for the International Atomic Energy Agency standard problem exercise no. 2, a small-break loss-of-coolant accident, performed on the PMK-NVK integral test facility. Three parametric studies of the break vicinity modeling are outlined, testing different ways of connecting the cold leg and hydro accumulator to the downcomer and determining proper energy loss discharge coefficients at the break. Further, the nodalization study compared four different RELAP5 models, varying from a detailed one with more than 100 nodes, down to the miniature one, with only ~ 30 nodes. Modeling of some VVER-440 features, such as horizontal steam generators and hot-leg loop seal, is discussed.

G. E. McCreery, K. G. Condie, and M. P. Plessinger, "B&W Once-Through Steam Generator Single-Tube Experiment Results," *15th Water Reactor Safety Information Meeting, Gaithersburg, MD, October 26, 1987*.

Experiments are being conducted in an air-water facility that models Babcock & Wilcox once-through steam generator (OTSG) heat transfer and fluid flow behavior during auxiliary feedwater (AFW) injection. The OTSG is a single-pass counterflow tube-in-shell heat exchange. Decay heat is removed by injecting AFW into the steam generator boiler region. AFW is injected near the top of the bundle, typically

through seven penetrating nozzles at the periphery of the bundle, and results in a complex steam-water counterflow situation within the boiler. As AFW is injected, it tends to fall downward because of gravity and inward because of momentum. Fluid flow is impeded and redistributed by tube support plates (TSPs) spaced along the bundle and by steam flow up the bundle. The single-tube experiments described in this paper are the first in a series that examines the basic phenomena of AFW radial and axial flow distribution, TSP flooding, and tube heat transfer. The succeeding experiments, which are presently underway, address the AFW behavior in an unheated multi-tube (625 tubes) full-scale 1/8sector of the OTSG that includes the top three TSPs. The overall objective of the experiment series is to obtain observations and data of steam generator fluid flow and heat transfer phenomena to develop improved RELAP5 and TRAC code models. This paper describes data obtained in the single-tube experiments conducted to date. The relevant phenomena observed are described and the data are analyzed. The analysis is preliminary for the heat transfer data since it employees a computer program that is presently under development.

M. M. Megahed, *RELAP5/MOD2 Assessment Simulation of Semiscale MOD-2C Test S-NH-3,* NUREG/CR-4799, EGG-2519, June 1987.

This report documents an evaluation of the RELAP5/MOD2/36.05 thermal-hydraulic computer code for a simulation of a small break loss-of-coolant accident (SBLOCA) transient. The experimental database for the evaluation is the result of Test S-NH-3 performed in the Semiscale MOD-2C test facility. The test modeled a 0.5% SBLOCA with an accompanying failure of the high-pressure injection emergency core cooling system. The test facility and RELAP5/MOD2 model used in the calculations are described. Evaluations of the accuracy of the calculations are presented in the form of comparisons of measured and calculated histories of selected parameters associated with the primary and secondary systems. The conclusion was that the code is capable of making SBLOCA calculations efficiently. However, some of the SBLOCA-related phenomena were not properly predicted by the code, suggesting a need for code improvement.

J. Miettinen, T. Kervinen, H. Tuomisto, and H. Kantee, "Oscillations of Single-Phase Natural Circulation During Overcooling Transients," *American Nuclear Society Anticipated and Abnormal Transients in Nuclear Power Plants, Atlanta, GA, April 1987.*

Strong oscillations of single-phase natural circulation were found when analyzing overcooling transients of Loviisa Unit 1 reactor pressure vessel with the system codes RELAP5/MOD2 and SMABRE. SMABRE is a fast-running code for small break loss-of-coolant accident analyses. The low flow rate periods of an oscillating natural circulation may cause significant temperature decrease in the cold leg and downcomer when the high-pressure safety injection is used. Therefore, oscillation phenomena need to be studied further to define their importance for reactor vessel integrity. Similar oscillations have been found in RELAP5 calculations of the H. B. Robinson Unit 2 steam generator tube rupture sequence in connection with the integrated pressurized thermal shock study. The oscillations were explained qualitatively to result from the one-dimensional node model. The purpose of this paper is to demonstrate that observed single-phase natural circulation oscillations can occur in a one-dimensional representation. Qualitative judgments

and system calculations are used to show that these oscillations will be strongly damped in a three-dimensional geometry.

C. S. Miller, "RELAP5/MOD2 Development," *14th Water Reactor Safety Information Meeting, Gaithersburg, MD, October 27, 1986*.

RELAP5/MOD2 is a pressurized water reactor system transient analysis computer code developed for the U. S. Nuclear Regulatory Commission Safety Research and Regulatory Programs. MOD2 was officially released in April 1984. Since that time, development has focused on refinements designed to increase code speed, usability, and reliability.

D. Mirkovic and D. J. Diamond, *Boron Flushing During a BWR Anticipated Transient Without Scram*, NUREG/CR-5573, BNL-NUREG-52237, June 1990.

This report documents a study of an accident sequence in a boiling water reactor in which there is a large reactivity insertion because of the flushing of borated water from the core. This has the potential to occur during an anticipated transient without scram after the injection of borated water from the standby liquid control system. The boron shuts down the power, but if there is a rapid depressurization of the vessel (e.g., due to the inadvertent actuation of the automatic depressurization system), large amounts of low pressure, relatively cold, unborated water enter the vessel causing a rapid dilution and cooling. This study was carried out to determine if the reactivity addition caused by this flushing could lead to a power excursion sufficient to cause catastrophic fuel damage. Calculations were carried out using the RELAP5/MOD2 computer code under different assumptions regarding timing and availability of low-pressure pumps and with different reactivity coefficients. The results showed that the fuel enthalpy rise was insufficient to cause catastrophic fuel damage, although less severe fuel damage might still be possible from the overheating of the fuel cladding.

J. Miro et al., *Study on the State of the Art of the Development of Some Thermal-Hydraulic Safety Codes for PWR Systems, Part One: Code Description, and Part Two: Code Comparison*, EUR-11522, Draft, March 1987, Gesellschaft fur Reaktorsicherheit.

This report is concerned with thermal-hydraulic phenomena on the primary and secondary side of pressurized water reactors. It is addressed to engineers and scientists who would like to improve their knowledge of the model and the phenomena description, which is existing in the different codes. It should also be of interest for persons who need an overview on existing codes. The selected codes are ALMOD (Federal Republic of Germany), CATHARE (France), DRUFAN/FLUT (Federal Republic of Germany), RELAP5/MOD2 (U. S.), THYDEP2 (Japan), and TRAC/PF1/MOD1 (U. S.). The report is divided into two parts. The first part presents all relevant information (e.g., structure, physical models, and numerical solution schemes) code by code with a common structure. The second part is devoted to a systematic comparison of main features, corresponding to the structure of the part 1 code description, and to quantitative comparisons concerning some important specific phenomena (e.g., interfacial friction, mass transfer) and structure-to-fluid heat transfer.

S. M. Modro, R. J. Beelman, and J. E. Fisher, *Preliminary Analyses of AP600 Using RELAP5,* October 1991.

This paper presents results of preliminary analyses of the proposed Westinghouse Electric Corporation AP600 design. AP600 is a two loop, 600 MW (e) pressurized water reactor (PWR) arranged in a two hot leg, four cold leg nuclear steam supply system (NSSS) configuration. In contrast to the present generation of PWRs it is equipped with passive emergency core coolant (ECC) systems. Also, the containment and the safety systems of the AP600 interact with the reactor coolant system and each other in a more integral fashion than present day PWRs. The containment in this design is the ultimate heat sink for removal of decay heat to the environment. Idaho National Engineering Laboratory (INEL) has studied applicability of the RELAP5 code to AP600 safety analysis and has developed a model of the AP600 for the Nuclear Regulatory Commission. The model incorporates integral modeling of the containment, NSSS and passive safety systems. Best available preliminary design data were used. Nodalization sensitivity studies were conducted to gain experience in modeling of systems and conditions which are beyond the applicability of previously established RELAP5 modeling guidelines or experience. Exploratory analyses were then undertaken to investigate AP600 system response during postulated accident conditions. Four small break LOCA calculations and two large break LOCA calculations were conducted.

P. Moeyaert and E. Stubbe, *Assessment Study of RELAP5/MOD2, Cycle 36.04 Based on Spray Start-up Test for DOEL-4*, ICAP Number 00045, July 1989, Brussels, Belgium.

This report presents an assessment study for RELAP5/MOD2 based on a pressurizer spray startup test of the DOEL-4 power plant. DOEL-4 is a three-loop Westinghouse pressurized water reactor plant ordered by the EBES utility with a nominal power rating of 1,000 MWe and equipped with preheated Type E steam generators. The pressurizer spray and heater test (SU-PR-01), one of a large series of commissioning tests normally performed on new plants, was performed on February 2, 1985. TRACTEBEL, being the Architect-Engineer for this plant was closely involved with all startup tests and was responsible for the final approval of the tests.

D. G. Morris and M. W. Wendel, *High Flux Isotope Reactor System RELAP5 Input Model,* January 1993.

A thermal-hydraulic computational model of the High Flux Isotope Reactor (HFIR) has been developed using the RELAP5 program. The purpose of the model is to provide a state-of-the art thermal-hydraulic simulation tool for analyzing selected hypothetical accident scenarios for a revised HFIR Safety Analysis Report (SAR). The model includes (1) a detailed representation of the reactor core and other vessel components, (2) three heat exchanger/pump cells, (3) pressurizing pumps and letdown valves, and (4) secondary coolant system (with less detail then ant primary system). Data from HFIR operation, component tests, tests in facility mockups and the HFIR, HFIR specific experiments, and other pertinent experiments performed independent of HFIR were used to construct the model and validate it to the extend permitted by the data. The detailed version of the model has been used to simulate loss-of-coolant accidents (LOCAs). While the abbreviated version has been developed for the operational transient that allow use of a less detailed nodalization. Analysis of station blackout with core long-term decay heat

removal via natural convection has been performed using the core and vessel portions of the detailed model.

C. G. Motloch and S. M. Modro, *Applicability of RELAP5 for Safety Analysis of AP600 and PIUS Reactors,* 1990.

An Assessment of the applicability of using RELAP5 for performing safety analyses of the AP600 and PIUS advanced reactor concepts is being performed. This ongoing work is part of a larger safety assessment of advanced reactors sponsored by the United States Nuclear Regulatory Commission. RELAP5 models and correlations are being reviewed from the perspective of the AP600 and PIUS phenomena and features that could be important to reactor safety. The purpose is to identify those areas in which new mathematical models of physical phenomena would be required to be added to RELAP5. In most cases, the AP600 and PIUS designs and systems and the planned and off-normal operations are similar enough to current Pressurized Water Reactors (PWR) that RELAP5 safety analysis applicability is unchanged. However, for AP600 the single most important systemic and phenomenological difference between it and current PWRs is in the close coupling between the reactor system and the containment during postulated Loss-of-Coolant Accident (LOCA) events. This close coupling may require the addition of some thermal-hydraulic models to RELAP5. And for PIUS, the most important new feature is the thermal density locks. These and other important safety related features are discussed. This document presents general descriptions of RELAP5, AP600, and PIUS, describes the new features and phenomena of the reactors, and discusses the code/reactors safety-related issues.

L. Nilsson and A. Sjoeberg, *Analysis of Breaks in Pipe Connections to the Hot Leg and to the Loop Seal in the Primary System of Ringhals2 PWR*, in Swedish, STUDSVIK-NP-87-57, May 17, 1987, Swedish Nuclear Power Inspectorate, Stockholm; Studsvik Energiteknik AB, Nykoping, Sweden.

Analysis has been made of seven different cases of breaks in pipes connected to the hot leg and the loop seal in the Ringhals2 pressurized water reactor. The pipes, in which guillotine breaks are postulated, have nominal diameters ranging from 1 to 14 inches. The analysis supplements the basis for a review of the inspection procedures for the safety of pressure vessels prescribed by the Swedish Nuclear Power Inspectorate. A similar analysis already exists concerning breaks in the cold leg connections. The analysis has been made using the thermal-hydraulic computer code RELAP5/MOD2 and with best-estimate assumptions. This means that normal operating conditions have been adopted for the input to the calculations. However, the capacity of the safety injection system was assumed to be reduced by having one pump not operating in each of the low-pressure and high-pressure safety injection systems. The results of the analysis are presented in tables and as computer plots. The analysis shows that the consequences with respect to increased fuel rod and cladding temperatures are quite harmless. Only the two cases with the largest break sizes lead to critical heat flux (CHF) and increased temperatures for the hottest rods in the core. The peak cladding temperature was 636°^{o}C for the 12-inch break. In both cases, rewetting occurred within 25 seconds of accident initiation. In the cases with breaks in connections of 6-inch diameter and smaller, the RELAP5 calculations indicated a substantial margin to CHF throughout the transients.

L. Nilsson, *Assessment of RELAP5/MOD3 Against Twenty-Five Post-Dryout Experiments Performed at the Royal Institute of Technology,* Swedish Nuclear Power Inspectorate, Stockholm, Sweden, May 1993.

Assessment of RELAP5/MOD2 has been made against various experimental data, among others data from twenty-five post-dryout experiments conducted at the Royal Institute of Technology (RIT) in Stockholm. As the MOD3 version of RELAP5 has now been released, incorporating a different method of calculating critical heat flux compared to RELAP5/MOD2, it seemed justified to make another assessment against the same RIT-data. The results show that the axial dryout position is generally better predicted by the MOD3 than by the MOD2 version. The prediction is, however, still nonconservative, i.e., the calculated dryout position falls in most cases downstream the actual measured point. While the pre-dryout heat transfer seems to be equal for MOD2 and MOD3, both versions giving slightly higher wall temperatures than the experiments, there is a considerable difference in the post-dryout heat transfer. The results of the RIT data comparison indicate that MOD3 underpredicts the post-dryout wall temperatures remarkably while MOD2 gave reasonable agreement. In this respect RELAP5/MOD3 shows no improvement over RELAP5/MOD2.

C. K. Nithianandan, "Calculation of Once-Through Steam Generator Performance Using RELAP5/MOD2," *American Nuclear Society and Atomic Industrial Forum Joint Meeting, Washington, D. C., November 1986*.

Three steam generator performance tests from the Babcock & Wilcox 19-tube, once-through steam generator (OTSG) test facility were simulated using RELAP5/MOD2/36.01, and the results were compared with the experimental data. RELAP5 predicted the steam generator steady-state performance reasonably well. However, further refinements to the boiling and post-critical heat flux heat transfers would improve the capability to correctly predict OTSG behavior.

C. K. Nithianandan et al., "RELAP5/MOD2 Code Assessment," *American Nuclear Society Winter Meeting, San Francisco, CA, November 1985, 50 and 51, pp. 326-327.*

Babcock and Wilcox (B&W) has been working with the code developers at EG&G Idaho, Inc. and the U. S. Nuclear Regulatory Commission in assessing the RELAP5/MOD2 computer code for the past year by simulating selected separate-effects tests. The purpose of this assessment has been to evaluate the code for use in the Multiloop and Once-Through Integral System Tests simulations and in the prediction of pressurized water reactor transients. B&W evaluated various versions of the code and made recommendations to improve code performance. As a result, the currently released version (Cycle36.0) has been improved considerably over earlier versions. However, further refinements to some of the constitutive models may still be needed to further improve the predictive capability of RELAP5/MOD2. The following versions of the code were evaluated: (a) RELAP5/MOD2/22 - first released version, (b) RELAP5/32 - EG&G Idaho, Inc. test version of RELAP5/MOD2/32, (c) RELAP5/MOD2/36 - frozen cycle for international code assessment, (d) updates to Cycle36 based on recommendations developed by B&W during the simulation of a Massachusetts Institute of Technology pressurizer test, and (e) Cycle36.1 updates received from EG&G Idaho, Inc.

C. K. Nithianandan, N. H. Shah, and R. J. Schomaker, "RELAP5/MOD2 Assessment at Babcock & Wilcox," *13th Water Reactor Safety Research Information Meeting, Washington, D.C., October 1985*.

Babcock & Wilcox (B&W) has been working with the code developers at EG&G Idaho, Inc. and the U. S. Nuclear Regulatory Commission in assessing the RELAP5/MOD2 computer code for the past year by simulating selected separate effects tests. The purpose of this B&W Owners Group-sponsored assessment was to evaluate RELAP5/MOD2 for use in design calculations for the Multiloop and Once-Through Integral System Tests and in the prediction of pressurized water reactor transients. B&W evaluated various versions of the code and made recommendations to improve code performance. As a result, the currently released version (Cycle 36.01) has been improved considerably over earlier versions. However, further refinements to some of the constitutive models may still be needed to further improve the predictive capability of RELAP5/MOD2.

C. K. Nithianandan and J. R. Biller, "Thermal-hydraulic Effects of Clad Swelling and Rupture During Reflood," *Transactions of the American Nuclear Society Winter Meeting, Washington, D. C., November 11-15, 1990.*

During a loss-of-coolant accident (LOCA) in a pressurized water reactor (PWR), the cladding of some fuel rods may undergo swelling and rupture. Droplet breakup at swelled and ruptured locations plays an important role in the coolability of these rods during the LOCA reflooding period. Various reflood experiments simulated blockage and rupture effects using sleeves mounted on solid electrically heated rods. The REBEKA tests, which used electrically heated rods with pressurized gaps, show that the formation and propagation of a second quench front from the rupture location are dominant in reducing the clad temperature downstream of the rupture compared to other blockage and rupture effects. The RELAP5/MOD2 computer code was extensively modified by the Babcock & Wilcox Fuel Company to improve its predictive capabilities. Recently, models were added to predict the thermal-hydraulic behavior of a nuclear fuel rod during the reflood phase of a large-break LOCA in a PWR. Modifications included modeling to simulate grid spacer, blockage, and rupture effects; a dynamic gap model to calculate gap heat transfer and to predict clad swelling rupture; and a metal/water reaction model. A simple model to simulate the droplet breakup mechanisms at a grid spacer or clad rupture location was developed and incorporated into RELAP5.

C. K. Nithianandan, R. J. Lowe, and J. R. Biller, "Thermal-Hydraulic Effect of Grid Spacers and Cladding Rupture During Reflood," *Transactions of the American Nuclear Society*, 1992.

Droplet breakup at grid spacers and at cladding swelled and ruptured locations plays an important role in the coolability of nuclear fuel rods during the reflooding period of a loss-of-coolant accident (LOCA) in a pressurized water reactor (PWR). Models to simulate spacer grid effects and blockage and rupture effects on system thermal-hydraulics were added to the B&W Fuel Company's version of the RELAP5/MOD2 computer code. RELAP5/MOD2-B&W was used to perform a postulated cold-leg large-break LOCA in a recirculating steam generator PWR. A summary of RELAP5 models and the PWR analysis results is presented in this paper.

Nordic Liaison Committee for Atomic Energy, *Computer Codes for Small-Break Loss-of-Coolant Accidents, Final Report of the NKA project SAK-3,* September 1985.

An assessment of computer codes for analysis of small break loss-of-coolant accidents (SBLOCAs) is performed. The work comprises the American systems codes TRAC-PF1, RELAP5/MOD1, RELAP5/MOD2, and the Finnish fast-running code SMABRE, which are assessed theoretically and by comparative calculations of five SBLOCA experiments. On this basis, comparisons are made of the advantages and drawbacks of each code to conclude which should be selected for SBLOCA analysis. A recommendation of necessary modifications is included.

Nordic Liaison Committee for Atomic Energy, *Heat Transfer Correlations in Nuclear Reactor Safety Calculations*, RISO-M-2504, June 1985.

Heat transfer correlations, most of them incorporated in the heat transfer packages of the nuclear reactor safety computer programs RELAP5, TRAC-PF1 and NORA, have been tested against a relevant set of transient and steady-state experiments. In addition to usually measured parameters, the calculations provided information on other physical parameters. Results are presented and discussed. The report consists of a main report (Volume I) and appendices (Volume II). Volume I is recommended for those looking for main results rather than details; the appendices will be useful for computer program developers.

C. Oh, S. T. Polkinghorne, T. K. Larson, and J. C. Chapman, “Countercurrent Flow Limitation in Thin Rectangular Channels Between Advanced Test Reactor Fuel Elements,” *Transactions of the American Nuclear Society,* 1992.

An analytical and experimental investigation of countercurrent flow limitation (CCFL) in thin, rectangular channels, similar to those between adjacent fuel elements in the Advanced Test Reactor (ATR), was conducted at the Idaho National Engineering Laboratory. The ATR is a 250-MW (thermal) materials irradiation facility operated by EG&G Idaho, Inc. for the U. S. Department of Energy. During a postulated large-break loss-of-coolant accident (LOCA), the ATRs emergency core cooling system will inject water directly into the reactor vessel both above and below the core. However, reflood via the upper injection system may be limited by upward flowing steam. Flooding experiments were carried out with air and water to evaluate the flooding limits in a 0.0011- (or 0.0022)- x 0.064- x 1.55-m test section. The test section represented the flow channel between the side plates of adjacent ATR fuel elements through which coolant could enter the core during a large-break LOCA. The objectives of the present study were to (a) develop a drift-flux CCFL model from the experimental data and (b) assess the ability of the RELAP5 thermal-hydraulic code to simulate CCFL.

M. G. Ortiz and L. S. Ghan, *Uncertainty Analysis of Minimum Vessel Liquid Inventory During a Small-Break LOCA in a B&W Plant - An Application of the CSAU Methodology Using the RELAP5/MOD3 Computer Code,* NUREG/CR-5818, EGG-2665, Idaho National Engineering Laboratory, December 1992

The Nuclear Regulatory Commission (NRC) revised the emergency core cooling system licensing rule to allow the use of best-estimate computer codes, provided the uncertainty of the calculations are quantified and used in the licensing and regulation process. The NRC developed a generic methodology called Code Scaling, Applicability, and Uncertainty (CSAU) to evaluate best-estimate code uncertainties. The objective of this work was to adapt and demonstrate the CSAU methodology for a small-break loss-of-coolant accident (SBLOCA) in a Pressurized Water Reactor of Babcock & Wilcox Company lowered loop design using RELAP5/MOD3 as the simulation tool. The CSAU methodology was successfully demonstrated for the new set of variants defined in this project (scenario, plant design, code). However, the robustness of the reactor design to this SBLOCA scenario limits the applicability of the specific results to other plants of scenarios. Several aspects of the code were not exercised because the conditions of the transient never reached enough severity. The plant operator proved to be a determining factor in the course of the transient scenario, and steps were taken to include the operator in the model, simulation, and analyses.

M. G. Ortiz, L. S. Ghan, and J. Vogl, "Small Break LOCA RELAP5/MOD3 Uncertainty Quantification: Bias and Uncertainty Evaluation for Important Phenomena," *19th Water Reactor Safety Information Meeting; Bethesda, MD, October 28-30, 1991.*

The Nuclear Regulatory Commission (NRC) revised the Emergency Core Cooling System (ECCS) licensing rule to allow the use of Best-Estimate (BE) computer codes, provided the uncertainty of the calculations are quantified and used in the licensing and regulation process. The NRC developed a generic methodology called Code Scaling, Applicability and Uncertainty (CSAU) to evaluate BE code uncertainties. The CSAU methodology was demonstrated with a specific application to a pressurized water reactor (PWR), experiencing a postulated large break loss-of-coolant accident (LBLOCA). The current work is part of an effort to adapt and demonstrate the CSAU methodology to a small break (SB) LOCA in a PWR of B&W design using RELAP5/MOD3 as the simulation tool. The subject of this paper is the Assessment and Ranging of Parameters, which determines the contribution to uncertainty of specific models in the code. In particular, the authors show the methodology used to assess the uncertainty of the specific models investigated. The authors have selected four phenomena of the highest importance to demonstrate the evaluation of bias and uncertainty; these are the break flow, natural circulation, decay power, and the temperature of the high pressure injection flow.

W. A. Owca, *Quick Look Report for Semiscale MOD-2C Experiment S-NH-1*, EGG-RTH-7147, February 1986.

Results are presented of a preliminary analysis of the first test performed in the Semiscale MOD-2C Small Break, Loss-of-Coolant Accident Without HPI (NH) series. Test S-NH-1 simulated a pressurized water reactor transient initiated by the shear of a small diameter penetration in a cold leg, equivalent to 0.5% of the cold leg flow area. The high-pressure injection system was assumed to be inoperative throughout the transient. Recovery was initiated on a high core temperature signal and consisted of latching open both steam generator atmospheric dump valves and normal accumulator operation. The test results provided a measured evaluation of the effectiveness of automatic plant responses and operator controlled recovery operations in mitigating the effects of a small break loss-of-coolant accident when

high-pressure injection is unavailable. Test data were compared to RELAP5/MOD2. Data from this test will be examined to evaluate event signatures and event severities in Semiscale and recovery procedures, with the principal objective of providing data to the benchmark computer code (RELAP5) calculations. Test data will also be compared to other tests in the series to assess the effects of break size and alternative operator recovery operations.

W. A. Owca and T. H. Chen, *Quick Look Report for Semiscale MOD-2C Test S-FS-1*, EGG-SEMI-6858, May 1985.

Results are presented of a preliminary analysis of the second test performed in the Semiscale MOD-2C Steam Generator Feedwater and Steam Line Break (S-FS) experiment series. Test S-FS-1 simulated a pressurized water reactor transient initiated by a double-ended offset shear of a steam generator main steam line downstream of the flow restrictor. Initial conditions represented normal full-scale plant "hot-standby" operation. The transient included an initial 600-s period in which only automatic plant protection systems responded to the initiating event. This period was followed by a series of operator actions necessary to stabilize the plant. Test data were compared with the RELAP5/MOD2 computer code and provided a basis for comparison with other tests in the series of the effects of break size and location of primary overcooling and primary-to-secondary heat transfer.

D. E. Palmrose and J. S. Herring, "Modeling of a Horizontal Steam Generator for the Submerging Nuclear Power Station Concept," *1993 RELAP5 International Users Meeting, Boston, MA July 6-9, 1993.*

A submerged nuclear power station has been proposed as an alternative power station with a relatively low environmental impact for use by both industrialized and developing countries. The station would be placed 10 m above the seabed at a depth of 30-100 m and a distance of 10 - 30 km from shore. The submerging nuclear power station would be manufactured and refueled in a central facility, thus gaining the economies of factory fabrication and the flexibility of shore-lead-time deployment. To minimize the size of the submerged hull, horizontal steam generators are proposed for the primary-to-secondary heat transfer, instead of the more traditional vertical steam generators. The horizontal steam generators for SNPS would be similar in design to the horizontal steam generators used in the N-Reactors except the tube orientation is horizontal (the tube's inlet and outlet connection points on the tubesheet are at the same elevation). Previous RELAP5 input decks for horizontal steam generators have been either very simplistic (Loviisa PWR) or used a vertical tube orientation (N-Reactor). This paper will present the development and testing of a RELAP5 horizontal steam generator model, complete with a simple secondary water level control system, that accounts for the dynamic flow conditions which exist inside horizontal steam generators.

R. J. Park, Y. Jin, S. D. Suk, and S. K. Chae, "Analysis of Station Blackout Transient for Kori Nuclear Power Plant Unit 1," *Third International Topical Meeting on Nuclear Power Plant Thermal Hydraulics and Operations, Seoul, Korea, November 1988*, Korea Advanced Energy Research Institute.

The postulated transients associated with station blackout were analyzed for the Kori Nuclear Power Plant Unit 1. The base transient, the TMLB' sequence, assumes no offsite power, onsite power, feedwater,

or operator actions. Reactor coolant pump (RCP) shaft seal leakage during the TMLB' sequence was also analyzed. The core damage occurred about 7,300 seconds after the transient initiated in the base TMLB' sequence. The core damage occurred earlier in TMLB' with RCP shaft seal leakage than in the base TMLB' sequence. The earlier the shaft seal failed, the earlier the core damage occurred. RELAP5/MOD2 and SCDAP/MOD1 computer codes were used in the analyses.

I. Parzer, B. Mavko, and S. Petelin, "RELAP5 Simulation of SBLOCA in a VVER 440 Model," *Transactions of the American Nuclear Society,* 1992.

The VVER-440-type plants differ considerably from western-type pressurized water reactors (PWR). The two main distinguishing characteristics are horizontal steam generators and loop seals in both hot and cold legs, which are lately a great safety concern worldwide. In 1987, the International Atomic Energy Agency (IAEA) organized and sponsored one of the tests performed on the Hungarian PMK-NVH test facility and called it IAEA-SPF-2. The test was chosen from a wider test matrix performed to investigate emergency core cooling system capability in VVER-440 plants for a small-break loss-of-coolant accident (SBLOCA). PMK-NVA is a one-loop, full-height, full-pressure model of the Hungarian Paks nuclear power plant, type VVER-440, Soviet production. The facility power level is 100% according to the 1:2070 scaling factor.

M. P. Paulsen, C. E. Peterson, and K. R. Katsma, *Feasibility Study for Improved Steady-State Initialization Algorithms for the RELAP5 Computer Code,* April 1993.

A design for a new steady-state initialization method is presented that represents an improvement over the current method used in RELAP5. Current initialization methods for RELAP5 solve the transient fluid flow balance equations simulating a transient to achieve steady-state conditions. Because the transient solution is used, the initial conditions may change from the desired values requiring the use of controllers and long transient running times to obtain steady-state conditions for system problems. The new initialization method allows the user to fix thermal-hydraulic values in volumes and junctions where the conditions are best known and have the code compute the initial conditions in other areas of the system. The steady-state balance equations and solution methods are presented. The constitutive, component, and special purpose models are reviewed with respect to modifications required for the new steady-state initialization method. The requirements for user input are defined and the feasibility of the method is demonstrated with a test bed code by initializing some simple channel problems. The initialization of the sample problems using the old and the new methods are compared.

J. J. Pena, S. Enciso, and F. Reventos, *Thermal-Hydraulic Post-Test Analysis of OECD LOFT LP-FP-2 Experiment,* Consejo de Seguridad Nuclear, Madrid, Spain, April 1992.

An assessment of RELAP5/MOD2 and SCDAP/MOD1 against the OECD LOFT experiment LP-FP-2 is presented. LP-FP-2 studies the hypothetical release of fission products and their transport following a large-break LOCA scenario. The report comprises a general description of the LP-FP-2 experiment, a summary of thermal-hydraulic data, a simulation of the LP-FP-2 experiment, results of the RELAP5/

MOD2 base calculation, the RELAP5/MOD2 sensitivity analysis, the SCDAP/MOD1 nodalization for an LP-FP-2 experiment, the results of the SCDAP/MOD1 calculation, and the summary and conclusions.

J. Perez, *RELAP5/MOD2 Post-Test Calculation of the OECD LOFT Experiment LP-SB-1,* Consejo de Seguridad Nuclear, Madrid, Spain, April 1992.

This document presents the analysis of the OECD LOFT LP-SB-1 Experiment performed by the Consejo de Seguridad Nuclear of Spain working group making use of RELAP5/MOD2 in the frame of the Spanish LOFT Project. LP-SB-1 experiment studies the effect of an early pump trip in a small break LOCA scenario with a 3-inch equivalent diameter break in the hot leg of a commercial PWR.

J. Perez, *RELAP5/MOD2 Post-Test Calculation of the OECD LOFT Experiment LP-SB-2,* Consejo de Seguridad Nuclear, Madrid, Spain, April 1992.

This document presents the analysis of the OECD LOFT LP-SB-2 Experiment performed by the Consejo de Seguridad Nuclear of Spain working group making use of RELAP/MOD2 in the frame of the Spanish LOFT Project. LB-SB-2 experiment studies the effect of a delayed pump trip in a small break LOCA scenario with a 3-inch equivalent diameter break in the hot leg of a commercial PWR.

L. Pernecsky, G. Ezsoel, L. Szbados, and I. Toth, *The Adaption of the RELAP5/MOD1 Code*, Hungarian Academy of Sciences, Budapest, Hungary, Central Research Institute for Physics, January 1990.

Experiences with the application of RELAP5/MOD1 in evaluating the LOCA type failure simulation experiments of pressurized water reactors are presented in two parts under the same title. The simulation experiments were performed in the SPES facility (Simulator PWR per Experienze di Sicurezza, Italy) in the framework of the Organization for Economic Cooperation and Development/Committee on Safety of Nuclear Installations International Standard Problem No. 22. The calculational procedures and the input preparation strategy for WWER-1000 type reactors are described.

S. Petelin, I. Parzer, M. Gregoric, B. Mavko, A. Stritar, and M. Osredkar, "Post-test Calculation of SPE-2 with RELAP5/MOD2," *Technical Committee/Workshop on Computer Aided Safety Analysis, Berlin, German Democratic Republic, April 1989, In Computer Aided Safety Analysis, 1989,* Institute Jozef Stefan Ljubljana, Yugoslavia.

The PMK-NVH test facility was selected for the International Atomic Energy Agency (IAEA) SPE-2 Standard Problem. This facility has a high-pressure hydraulic loop containing an electrically heated reactor core, steam generator, primary pump, high-pressure safety injection system, and low-pressure safety injection accumulators. A small break loss-of-coolant accident was simulated. Results presented in this paper were obtained by posttest calculation. Calculations were performed by the RELAP5/MOD1/025 IBM version and by the RELAP5/MOD2/36.00 VAX version using the same input model, rearranged only slightly for different input requirements for different program versions.

S. Petelin, O. Gortnar, and B. Mavko, "RELAP5/MOD2 Split Reactor Vessel Model," *Winter Meeting of the American Nuclear Society (ANS), San Francisco, CA, November 1991.*

The majority of transients in pressurized water reactor nuclear power plants are basically asymmetrical, and the phenomena in the reactor vessel are two- or three-dimensional. The RELAP5/MOD2 computer code is a one-dimensional thermal-hydraulic code with reactor point kinetics and some capability for modeling special components and control systems. Simple RELAP5/MOD2 plant models generally assume perfect mixing of primary coolant within the reactor vessel. The split reactor vessel model was developed to enable more realistic prediction of asymmetrical transients in a two-loop power plant.

S. Petelin, O. Gortnar, B. Mavko, and I. Parzer, "Break Modeling for RELAP5 Analyses of ISP-27 Bethsy," *Transactions of the American Nuclear Society,* 1992.

This paper presents pre- and post-test analyses of International Standard Problem (ISP) 27 on the Bethsy facility and separate RELAP5 break model tests considering the measured boundary condition at break inlet. This contribution also demonstrates modifications which have assured the significant improvement of model response in post-test simulations. Calculations were performed using the RELAP5/MOD2/36.05 and RELAP5/MOD3. 5M5 codes on the MicroVAX, SUN, and CONVEX computers. Bethsy is an integral test facility that simulates a typical 900-MW (electric) Framatome pressurized water reactor. The ISP-27 scenario involves a 2-inch cold-leg break without HPSI and with delayed operator procedures for secondary system depressurization.

S. Petelin, B. Mavko, and O. Gortnar, "RELAP5/MOD2 Split Reactor Vessel Model and Steamline Break Analysis," *Nuclear Technology*, April 1993.

A split reactor vessel model for the RELAP5/MOD2 computer code is developed in an attempt to realize more realistic predictions of asymmetrical transients in a two-loop nuclear power plant. Based on this split reactor model, coolant mixing processes within the reactor vessel are examined. This study evaluates the model improvements in terms of thermal-hydraulic simulations of the reactor core inlet fluid condition and the consequent core behavior. Furthermore, the split reactor vessel model is introduced into an integral RELAP5/MOD2 plower plant model, and a steamline break analysis is performed to determine the influence of the boron concentration in the boron injection tank on accident consequences.

S. Petelin, B. Mavko, I. Tiselji, and O. Gortnar, "PWR Low Pressure Natural Circulation and Loss of All AC Power," *Joint International Conference on Nuclear Engineering, San Francisco, CA March 21-24, 1993.*

First phase of the specific PWR nuclear power plant transient analysis in area of low pressure phenomena, where no special possibilities of interventions exist, has been done. Such transients may be initiated by hypothetical loss of all plant AC power due to different causes during cold or hot shutdown. Complete transient has not been analyzed yet, because of the errors in results calculated by the RELAP5/MOD2 and RELAP5/MOD3 programs. The analysis has shown, that the stable decay heat removal with

single-phase primary coolant natural circulation is achieved but not preserved in the case where the initial reactor coolant system pressure is 1 bar. After some 5.5 hours into the transient voids start to form in the upper section of steam generator U-tubes, and two-phase natural circulation appears. On the other hand the stable decay heat removal with single-phase primary natural circulation is preserved if initial reactor coolant system pressure is 10 bar. The duration of such stable heat removal is limited by steam generator secondary coolant inventory. RELAP5/MOD2 predictions at 1 bar initial pressure were acceptable despite troubles that appeared after first void formation. RELAP5/MOD3 calculations were performed without any difficulties but results produced are unacceptable due to significant numerical mass error which caused unacceptable primary mass decrease of 8% in the first 10 hours of transient time. Mass error appeared also during the calculations at initial pressure of 10 bar performed by RELAP5/MOD2. It caused significant variations of the secondary coolant mass.

M. P. Plessinger, *Quick Look Report for Semiscale MOD-2C Test S-FS-11*, EGG-RTH-7103, November 1985.

Results of a preliminary analysis of the fifth test performed in the Semiscale MOD-2C Steam Generator Feedwater and Steam Line Break (FS) experiment series are presented. Test S-FS-11 simulated a pressurized water reactor transient initiated by a 50% break in a steam generator bottom feedwater line downstream of the check valve. With the exception of primary pressure, the initial conditions represented the initial conditions used for the Combustion Engineering, Inc. System 80 Final Safety Analysis Report Appendix 15B calculations. The transient included an initial 600-s period in which only automatic plant protection systems responded to the initiating event. This period was followed by a series of operator actions necessary to stabilize the plant followed by break isolation and affected loop steam generator refill with auxiliary feedwater. The test results provided a measured evaluation of the effectiveness of the automatic responses in minimizing primary system overpressurization and operator actions in stabilizing the plant. Test data were compared with the RELAP5/MOD2 computer code and also provided a basis for comparison with other tests in the series of the effects of break size on primary overpressurization and primary-to-secondary heat transfer.

S. T. Polkinghorne, T. K. Larson, and B. J. Buescher, "RELAP5 Simulation of Advanced Test Reactor Scaled LOCA Experiments 7, 8, 12, and 14," *Nuclear Technology, 93, No. 2,* pp. 240-251, February 1991.

This paper reports on the RELAP5 computer code used to simulate four small-scale loss-of-coolant accident (LOCA) experiments. The purpose of the study is to help assess RELAP5 under conditions similar to those expected during a large-break LOCA at an Advanced Test Reactor (ATR). During an ATR large-break LOCA. It is expected that the primary system pressure will rapidly decrease from the initial operating pressure (~2.55 MPa) to sub-atmospheric conditions governed by the primary coolant temperature. Flashing will occur in the high points of the system and air ingress from the break is possible. The RELAP5 code had not previously been assessed under these conditions The results show that RELAP5 accurately predicted pressures, water levels, and air ingress behavior, thus providing confidence in the ability of the code to simulate an ATR large-break LOCA.

R. J. Preece and J. M. Putney, *Preliminary Assessment of PWR Steam Generator Modelling in RELAP5/ MOD3: International Agreement Report,* National Power, Leatherhead Technology and Environment Centre, U. K., July 1993.

A preliminary assessment of Steam Generator (SG) modeling in the PWR thermal-hydraulic code RELAP5/MOD3 is presented. The study is based on calculations against a series of steady-state commissioning tests carried out on the Wolf Creek PWR over a range of load conditions. Data from the tests are used to assess the modeling of primary to secondary side heat transfer and, in particular, to examine the effect of reverting to the standard form of the Chen heat transfer correlation in place of the modified form applied in RELAP5/MOD2. Comparisons between the two versions of the code are also used to show how the new interphase drag model in RELAP5/MOD3 affects the calculation of SG liquid inventory and the void fraction profile in the riser.

J. M. Putney and R. J. Preece, *Assessment of PWR Steam Generator Modelling in RELAP5/MOD2; International Agreement Report,* National Power, Leatherhead Technology and Environment Centre, U. K., June 1993.

An assessment of Steam Generator (SG) modeling in the PWR thermal-hydraulic code RELAP5/ MOD2 is presented. The assessment is based on a review of code assessment calculations performed in the U. K. and elsewhere, detailed calculations against a series of commissioning tests carried out on the Wolf Creek PWR and analytical investigations of the phenomena involved in normal and abnormal SG operation. A number of modeling deficiencies are identified and their implications for PWR safety analysis are discussed - including methods for compensating for the deficiencies through changes to the input deck. Consideration is also given as to whether the deficiencies will still be resent in the successor code RELAP5/MOD3.

M. Ragheb, A. Ikomomopoulos, B. G. Jones, S. A. Ho, and R. Endicott, “Best-Estimate Analysis of a Small-Break Loss-of-Coolant Accident for a PWR Plant,” *Transactions of the American Nuclear Society, November 11-16, 1990.*

This paper presents the results of a small-break loss-of-coolant accident transient analysis for the Salem Westinghouse four-loop pressurized water reactor (PWR). The analysis has been performed using the MOD2 version of the best-estimate code RELAP5 on a Cyber 932 under the NOS/VE operating system. This version of the code uses a nonhomogeneous, nonequilibrium, one-dimensional, two-phase flow model that is solved by a partially-implicit numerical scheme. This effort is justified by the recent recognition by some nuclear utilities of the need to perform more realistic transient analyses using best-estimate models, while retaining the necessary conservatism of the evaluation models. It is believed that the improved computational capabilities of these analyses will increase the plants' availability and operational flexibility, as well as expand plant operating lifetimes.

M. Ragheb, O. Uluyol, B. G. Jones, S. A. Ho, and R. Endicott, “Station Blackout Simulation Model for a BWR Plant,” *Transactions of the American Nuclear Society, November 11-16, 1990.*

This paper presents the results of a station blackout transient analysis for the Hope Creek Boiling water reactor (BWR). The analysis has been performed using the MOD2 version of the best-estimate code RELAP5 on a Cyber 932 under the NOS/VE operating system. Whereas the RELAP5 code is primary a pressurized water reactor simulation code, new modeling features introduced into the MOD2 version, particularly the jetmixer model, has allowed the authors to effectively simulate the jet pumps in BWR systems. The station blackout transient, unless otherwise stated, assumes and takes credit for normal functioning of plant instrumentation and controls, plant protection, and reactor protection system. In their analysis, three cases with different plant states and protections availabilities have been considered: (1) reference case: no steam dump, three banks of S/R valves available, the reactor coolant inventory control (RCIC) and high pressure core injection (HPCI) systems not operative; (2) steam dump: 25% steam dump, three banks of S/R valves available, the RCIC and HPCI systems not operative; and (3) HPCI system on: no stem dump, three banks of S/R valves available, the HPCI and HPCS systems operative.

L. L. Raja and Y. A. Hassan, "Comparison of the RELAP5/MOD3 and RELAP5/MOD2 Predictions of the Winfrith Post-dryout Experiment," *Annual Meeting of the American Nuclear Society (ANS); Orlando, FL, June 1-6, 1991.*

The development and modification of any computer code necessitate assessment and validation of the code. A similar task prevails with the release of the thermal-hydraulic analysis code RELAP5/MOD3. RELAP5/MOD3 was developed by EG&G Idaho, Inc. from its predecessor code RELAP5/MOD2 after identifying certain deficiencies in the latter. Among the various modifications is the new interfacial drag model. In this study, the RELAP5/MOD2 and RELAP5/MOD3 codes are used to predict the results of a steady-state post-dryout experiment conducted at the Winfrith facility in the United Kingdom. The Winfrith test facility is used to perform post-dryout experiments are relatively low heat fluxes and steam qualities.

L. L. Raja, S. Banerjee, and Y. A. Hassan, "Simulation of the Loss of RHR During Midloop Operations and the Role of Steam Generators in Decay Heat Removal," *Transactions of the American Nuclear Society, 1992.*

Loss of residual heat removal (RHR) during midloop operations was simulated using the RELAP5/MOD3 thermal-hydraulic code for a typical four-loop pressurized water reactor (PWR) under reduced inventory level. Two cases are considered here; one for an intact reactor coolant system with no vents and the other for an open system with a vent in the pressurizer. The effect of air on the transients was studied, unlike the RETRAN analysis of core boiling during midloop operations performed by Fujita and Rice, which did not analyze the presence of air in the system. The steam generators have water in the secondary covering the U-tubes. The system gets pressurized once water starts boiling in the core with higher system pressures for the vent-closed case. Reflux condensation occurs in the U-tubes aiding decay heat removal and preventing complete uncovery of the core. Sudden pressurization of the hot leg and vessel upper head causes the reactor vessel to act as a manometer reducing the core level and raising the downcomer level. Fuel centerline and clad temperatures are below safety limits throughout the transients.

V. H. Ransom, *Course A-Numerical Modeling of Two-Phase Flows for presentation at Ecole d'Ete d'Analyse Numerique*, EGG-EAST-8546, May 1989.

This course is designed to provide an introduction to the application of two-fluid modeling techniques to two-phase or, more generally, multiphase flows, and to the numerical methods that have been developed for the solution of such problems. The methods that are presented have evolved to a large extent as a result of international efforts to improve the understanding of light water reactor transient response to postulated loss-of-coolant accidents. Transient simulation codes that are based on these methods are now in routine use throughout the international light water reactor safety research and regulatory organizations. While modeling methods for two-phase flow have evolved to the point that it is possible to predict the behavior of nuclear power plants under a wide variety of transient situations, the state of two-phase modeling has not progressed to the point of true predictive capability. The material that is presented in this course represents, to the best of the author's knowledge, the state of the art in modeling two-phase transient processes in light water reactor nuclear power systems. The material is based on experience accumulated by the author in the course of developing the RELAP5 computer code for simulating the transient behavior of light water reactor systems under normal operation and postulated accident conditions such as loss-of-coolant accidents.

V. H. Ransom et al., *RELAP5/MOD2 Code Manual Volume 1: Code Structure, System Models, and Solution Methods*, NUREG/CR-4312, EGG-2396, August 1985.

V. H. Ransom et al., *RELAP5/MOD2 Code Manual Volume 2: Users Guide and Input Requirements*, NUREG/CR-4312, EGG-2396, December 1985.

The principal objective of the RELAP5 project is to provide the U. S. Nuclear Regulatory Commission with a fast running and user-convenient light water reactor system transient analysis code for use in rule making, licensing audit calculations, evaluating operator guidelines, and as a basis for a nuclear plant analyzer. The RELAP5/MOD2 code has been developed for best-estimate transient simulation of pressurized water reactors and associated systems. The code modeling capabilities are simulation of large- and small-break loss-of-coolant accidents, as well as operational transients such as anticipated transient without Scram, loss of offsite power, loss of feedwater, and loss of flow. A generic modeling approach uses as much of a particular system to be modeled as necessary. RELAP5/MOD2 extends the modeling base and capabilities offered by previous versions of the code. In particular, MOD2 contains two energy equations, reflood heat transfer, a two-step numerics option, a gap conductance model, revised constitutive models, and additional component and control system models. Control system and secondary system components have been added to permit modeling of plant controls, turbines, condensers, and secondary feedwater conditioning systems. The modeling theory and associated numerical schemes are documented in Volume 1 to acquaint the user with the modeling base and thus aid in effective use of the code. Volume 2 contains detailed instructions for code application and input data preparation. In addition, Volume 2 contains user guidelines that have evolved over the past several years from application of the code at the Idaho National Engineering Laboratory and other national laboratories, and by industry users throughout the world.

V. H. Ransom, "RELAP5/MOD2: For PWR Transient Analysis," *International Conference on Numerical Methods in Nuclear Engineering, Montreal, Canada, September 6, 1983.*

RELAP5 is a light water reactor system transient simulation code for use in nuclear plant safety analysis. Development of a new version, RELAP5/MOD2, has been completed and will be released to the U. S. Nuclear Regulatory Commission during September 1983. The new and improved modeling capability of RELAP5/MOD2 is described and some developmental assessment results are presented. The future plans to extend the code to include severe accident modeling are briefly discussed.

V. H. Ransom and V. Mousseau, "Convergence and Accuracy Expectations for Two-Phase Flow Simulations," *1990 Canadian Nuclear Society International Conference on Simulation Methods in Nuclear Engineering, Montreal, Canada, April 18-20, 1990.*

The convergence and accuracy of the RELAP5/MOD2 two-phase flow model is studied by using analytical arguments, simple test problems, and comparison with results using a totally hyperbolic two-fluid model. The results of this study indicate that the basic two-fluid model, as numerically implemented in RELAP5/MOD2, is consistent, stable, and convergent. When constitutive models are included to obtain an engineering model for two-phase flow, convergence is obtained for discretizations that are consistent with the modeling uncertainty. Small irregularities in the solutions were observed at the finest discretizations. These irregularities are due to the constitutive models and/or their numerical implementation, but remain well within the two-phase flow model uncertainties.

V. H. Ransom and J. D. Ramshaw, "Discrete Modeling Considerations in Multiphase Fluid Dynamics," *Third International Topical Meeting on Nuclear Power Plant Thermal Hydraulics and Operations, Seoul, Korea, November 1988.*

A discussion is given of discrete modeling considerations in multiphase fluid dynamics and related areas. By the term "discrete modeling" the authors refer to a collection of ideas and concepts that they hope will ultimately provide a philosophical basis for a more systematic approach to the solution of practical engineering problems using digital computers. As presently constituted, the main ingredients in the discrete modeling "Weltanschauung" are made up of five considerations. First, any physical model must eventually be cast into discrete form to be solved on a digital computer. Second, the usual approach of formulating models in differential form and then discretizing them is an indirect route to a discrete model. It is also potentially hazardous: the length and time scales of the discretization may not be compatible with those represented in the model. Therefore, it may be preferable to formulate the model in discrete terms from the outset. Third, computer time and storage constraints limit the resolution that can be employed in practical calculations. These limits effectively define the physical phenomena, length scales, and time scales, which cannot be directly represented in the calculation and therefore must be modeled. This information should be injected into the model formulation process at an early stage. Fourth, practical resolution limits are generally so coarse that traditional convergence and truncation-error analyses become irrelevant. Fifth, a discrete model constitutes a *reduced description* of a physical system from which fine-scale details are eliminated. This elimination creates a closure problem, which has an inherently statistical character because of the uncertainty about the missing details. Methods from statistical physics may

therefore be useful in the formulation of discrete models. In the present paper, the authors elaborate on these themes and illustrate them with simple examples. The modeling of multiphase flow plays a fundamental role in light water reactor safety because of the impossibility of testing power reactors under all regimes of operation that might exist as a result of hypothetical accidents. System simulation codes such as RELAP5 and TRAC have been developed for use in predicting the response of reactor systems to design basis accidents, and they rely heavily on multiphase flow modeling. The development and assessment of these codes continue to be the focus of significant worldwide attention. Even so, these models for multiphase flow can not be regarded as entirely satisfactory for either an accuracy or a computing speed. The lesser used detailed multidimensional codes such as COBRA and COMMIX suffer similar deficiencies.

L. Rebollo, *Qualification of the Code RELAP5/MOD2 with Regard to Pressurizer Separate Effect Experiments,* December 1992.

As part of the RELAP5/MOD2 code assessment matrix, developed to qualify this simulation tool for analysis of pressurization transients in PWRs, two pressurizer separate effect experiments were analyzed. The results allow some conclusions concerning simulation of pressurization transients in real nuclear plants. The geometry, thermal properties and heat losses of the pressurizer as well as the time lag constant of the instrumentation and the time step of the calculation were identified as the key parameters. Some conclusions were obtained concerning the code's capability to predict the thermal gradients, the heat transfer at the different interfaces, the condensation and evaporation rates, and their impact on pressure behavior.

L. Rebollo, *RELAP5/MOD2 Analysis of a Postulated Cold Leg SBLOCA Simultaneous to a Total Black-Out Event in the Jose Cabrera Nuclear Station,* Union Electrica, SA Madrid, Spain, April 1992.

Several beyond-design bases cold leg small-break LOCA postulated scenarios based on the “lessons learned” in the OECD-LOFT LP-SB-3 experiment have been analyzed for the Westinghouse single-loop Jose Cabrera Nuclear Power Plant belonging to the Spanish utility UNION ELECTRICA FENOSA, S.A. The analysis has been done by the utility in the Thermal-Hydraulic & Accident Analysis Section of the Engineering Department of the Nuclear Division. The RELAP5/MOD2/36.04 code has been used on a CYBER 180/830 computer and the simulation includes the 6-inch RHRS charging line, the 2-inch pressurizer spray, and the 1.5-inch CVCS make-up line piping breaks. The assumption of a “total blackout condition” coincident with the occurrence of the event has been made in order to consider a plant degraded condition with total active failure of the ECCS. As a result of the analysis, estimates of the “time to core overheating startup” as well as an evaluation of alternate operator measures to mitigate the consequences of the event have been obtained. Finally a proposal for improving the LOCA emergency operating procedure (E-1) has been suggested.

L. Rebollo, *Assessment of the Code RELAP5/MOD2 Against Loss of Feedwater Without SCRAM,* Kerntechnik, Germany, February 1993.

The integral effect test L9-3 (loss of feedwater without reactor trip) performed at the LOFT facility was analyzed as part of an assessment of the RELAP5/MOD2 code with the aim of qualifying this simulation tool for analysis of pressurization transients in pressurized water reactors. The code proved suitable for analysis of this kind of transients. Some conclusions of relevance to simulation of anticipated transients without scram scenarios with forced circulation could be drawn.

L. Rebollo, *Simulation of the LOFT L9-4 Experiment with the Code RELAP5/MOD2,* Kemtechnik, Germany, February 1993.

The integral effect Test L9-4 (loss of offsite power without reactor trip) performed at the LOFT facility was analyzed as part of an assessment of the RELAP5/MOD2 code with the aim of qualifying this simulation tool for analysis of pressurization transient in pressurized water reactors. The code was qualified for analysis of the thermal-hydraulics and kinetics associated to this kind of sequences. Some conclusions concerning simulation of anticipated transients without scram scenarios under natural circulation and axial power profile redistribution in power reactors are derived.

F. Reventos, J. S. Baptista, A. P. Navas, and P. Moreno, *Assessment and Application of Blackout Transients at Asco Nuclear Power Plant with RELAP5/MOD2,* Asociacion Nuclear Asco, Barcelona, Spain, June 1993.

The Asociacion Nuclear Asco has prepared a model of Asco NPP using RELAP5/MOD2. This model, which include thermal-hydraulics, kinetics and protection and controls, has been qualified in previous calculations of several actual plant transients. The first part of the transients presented in this report is an actual blackout and one of the transients of the qualification process. The results are in agreement with plant data. The second part of the transient is a hypothetical case. It consists in restarting a primary pump and assume a new blackout. The phenomenology prediction of this second part has been useful from the operation and safety point of view.

F. Reventos, J. S. Baptista, A. P. Navas, and P. Moreno, *Assessment of a Pressurizer Spray Valve Faulty Opening Transient at Asco Nuclear Power Plant with RELAP5/MOD2: International Agreement Report,* Asociacion Nuclear Asco, Barcelona, Spain, December 1993.

The Asociacion Nuclear Asco has prepared a model of Asco NPP using RELAP5/MOD2. This model, which included thermal-hydraulics, kinetics and protection and controls, has been qualified in previous calculations of several actual plant transients. One of the transients of the qualification process is a pressurizer spray valve faulty opening presented in the report. It consists in a primary coolant depressurization that causes the reactor trip by over-temperature and later on the actuation of the safety injection. The results are in close agreement with plant data.

M. Richner, G. T. Analytis, and S. N. Aksan, *Assessment of RELAP5/MOD2, Cycle 36.02, using NEPTUN Reflooding Experimental Data,* Paul Scherrer Inst. (PSI), Villigen, Switzerland, August 1992.

This report discusses seven NEPTUN reflooding experiments with varying parameters flooding rate, single rod power, pressure and initial rod temperatures which were simulated with the code RELAP5/MOD2, version 36.02, to assess the code, especially its reflood model. These calculations were performed with the specific objectives of evaluating the general prediction capability as well as specific problem areas of the RELAP5/MOD2 code in modeling boiloff and reflood behavior. First a study of the effect of the hydraulic and conduction nodalization to the results of the code was performed using a high and a low flooding rate experiment. After the choice of a proper nodalization, base case calculations were done for all seven NEPTUN reflooding tests. The differences between code predictions and experiments are described and analyzed. Implementing new correlations into the code and modifying or correcting existing correlations, for example for wall heat transfer or interphase friction, some of the weak points of the code during reflooding could be identified. These modifications were checked with all seven NEPTUN experiments. Additionally, two FLECHT-SEASET tests were simulated with the frozen version and also with the modifications mentioned above.

R. A. Riemke, *Horizontal Flow Stratification Modifications for RELAP5/MOD3*, EGG-EAST-8526, February 1989.

The report documents the modifications to the horizontal stratification model in RELAP5/MOD3. Background information, the model description and solution method, coding changes, and an assessment of these changes are described in the report. The use of the phasic velocity difference in the Taitel-Dukler criterion along with a mass flux criterion improved the void fraction data comparison for the Two-Phase Flow Test Facility tests. Modifications and error corrections to the void gradient term improved the code's capability to calculate the correct velocities.

R. A. Riemke, “Countercurrent Flow Limitation Model for RELAP5/MOD3,” *Nuclear Technology, 93,* pp. 166-173, February 1991.

A countercurrent flow limitation model is incorporated into the RELAP5/MOD3 system transient analysis code. The model is based on the form used by Bankoff et al., and it is implemented in a manner similar to the RELAP5 choking model. Simulations using Dukler and Smith's air/water flooding test problem demonstrate the ability of the code to significantly improve its comparison to data when a flooding correlation suggested in Dukler and Smith's study is used. Independent assessment of the RELAP5/MOD2 code through the International Code Assessment Program has identified a number of deficiencies in the code. Evaluation of these deficiencies, and their regulatory significance, provides the basis for improvements in the RELAP5/MOD3 code. This paper documents the countercurrent flow limitation (CCFL) model that has been incorporated into RELAP5/MOD3.

R. A. Riemke, *Travel to Korea to Discuss the RELAP5/MOD3 Code at the Korea Atomic Energy Research Institute,* July 21, 1992.

This report discusses travel requested by the Korea Atomic Energy Research Institute (KAERI) to present seminars and participate in discussion sessions relating to the RELAP5/MOD3 code.

M. A. Rinckel and R. J. Schomaker, *RELAP5/MOD2 Benchmark of OTIS Leak Size Test #2202AA*, BAW-1092, January 1986.

This benchmark of the RELAP5/MOD2 code using OTIS Test #2202AA was performed to demonstrate the capabilities of the RELAP5/MOD2 code to predict the phenomena characteristic of a small break loss-of-coolant transient. This report is produced as partial fulfillment of the Babcock & Wilcox Owners Group commitment to the Integral System Test Program. The Once-Through Integral System (OTIS) facility, was designed and built for the investigation of thermal-hydraulic phenomena associated with small break loss-of-coolant accidents (SBLOCAs). The facility is a one-loop (one hot leg, one steam generator, and one cold leg) scaled representation of a B&W 205 Fuel Assembly raised loop plant. In March 1984, OTIS test 2202AA, which consisted of a 15 cm^2 pump suction SBLOCA with the pressurizer isolated and guard heaters energized, was completed. Important SBLOCA phenomena observed included system saturation, intermittent two-phase natural circulation, high elevation and pool boiler condenser modes of cooling, and system refill. The objective of this analysis was to simulate OTIS test 2202AA, up to and including the pool boiler condenser mode of cooling, with the current B&W version of RELAP5/MOD2/36. A model noding diagram is presented. The hot leg U-bend and steam generator noding are consistent with the modeling used for the Multiloop Integral System Test facility. A detailed description of the OTIS facility in parallel with a discussion of the RELAP5 model is presented are also given. The results of the study and concluding comments are also given.

S. C. Robert and Y. A. Hassan, "RELAP5 Model of a Once-Through Steam Generator of Nonuniform Auxiliary Feedwater Distribution," *Winter Meeting of the American Nuclear Society (ANS), San Francisco, CA, November 1991.*

The modeling of the steam generator plays an important role in simulating the thermal-hydraulic behavior of pressurized water reactors. The role of the steam generator is particularly important in the case of a 12-inch small-break loss-of-coolant accident (SBLOCA), where heat removal is vital in handling such thermal-hydraulic transient phenomena. The thermal-hydraulic analysis code RELAP5/MOD3 has been used to simulate the behavior of the Babcock and Wilcox full-scale once-through steam generator (FSOTSG) during an SBLOCA. To check the reliability of the RELAP5/MOD3 model, a sensitivity study must be performed. The purpose of this study is to determine the sensitivity of the RELAP5 model with respect to once-through steam generator (OTSG) primary-side renodalization. This includes a comparison of the secondary-side behavior due to renodalization of the primary side. In addition, possible recirculation in the primary side during the accident was investigated.

J. M. Rogers, *An Analysis of Semiscale Mod-2C S-FS-1 Steam Line Break Test Using RELAP5/MOD2,* Central Electricity Generating Board, Barnwood, United Kingdom, March 1992.

An analysis has been performed of Semiscale Steam Line Break Test, to support the validation of RELAP5/MOD2. Previous analyses of steam line breaks in the U.K. have made conservative assumptions about the lack of water carryover in the break discharge. This analysis utilizes more sophisticated steam generator models attempting to follow the complex two-phase phenomena that occur in this transient to

obtain a more realistic assessment of its consequences. Modeling, particularly of the phase separation process, is outlined. Problems with initial calculations are explained, and their solutions detailed. The main conclusion drawn is that although the calculations were acceptable overall, the carryover of water during the first seconds of the transient was too great. In addition, the heat transfer degraded too quickly, resulting in a smaller than observed primary cooldown, which would in a real plant result in an underestimate of the potential reactivity insertion. These deficiencies lead to the recommendation that the implementation of interphase drag, and steam generator heat transfer warrant further study.

U. S. Rohatgi, P. Saha, and B. K. Chexal, "Considerations for Realistic ECCS Evaluation Methodology for LWRs," *Third International Meeting on Reactor Thermal Hydraulics, Newport, RI, October 1985*, BNL-NUREG-37036, *Nuclear Technology, 76*, 1, pp. 11-26.

Various phenomena that govern the course of large- and small-break loss-of-coolant accidents in light water reactors and affect the key parameters (e.g., peak cladding temperature, timing of the end of blowdown, beginning of reflood, and complete quench) have been identified. The models and correlations for these phenomena in the current literature, in advance codes, and as prescribed in the current emergency core cooling system methodology outlined in Appendix K of Code of Federal Regulations 50 have been reviewed. It was found that the models and correlations in the present best-estimate codes such as TRAC and RELAP5 could be made more realistic by incorporating some of these models from the literature. However, an assessment program will be needed for the final model selection for the codes.

O. Rosdahl and D. Caraher, *Assessment of RELAP5/MOD2 Against Critical Flow Data from Marviken Tests JIT 11 and CFT 21*, NUREG/IA-0007, STUDSVIK/NP-86/99, September 1986, Studsvik Energiteknik AB.

RELAP5/MOD2 simulations are reported for the critical flow of saturated steam, the critical flow of subcooled liquid, and a low quality two-phase mixture. The experiments which were simulated used nozzle diameters of 0.3 m and 0.5 m. RELAP5 overpredicted the experimental flow rates by 10 to 25 percent unless discharge coefficients were applied.

O. Rosdahl and D. Caraher, *International Agreement Report: Assessment of RELAP5/MOD2 Against Marviken Jet Impingement Test 11 Level Swell*, NUREG/IA-0006, September 1986, Swedish Nuclear Power Inspectorate.

RELAP5/MOD2 simulations are reported for level swell of saturated liquid in a large vessel (5-m diameter, 22-m high). For certain nodalizations, RELAP5 is shown to predict the measured void fraction profile with fair accuracy. RELAP5 results are shown to be dependent on nodalization, with the accuracy of computed results deteriorating significantly when a large number of nodes is employed.

P. A. Roth, R. R. Schultz, and C. M. Choi, *Analysis of Two Small Break Loss-of-Coolant Experiments in the BETHSY Facility Using RELAP5/MOD3,* July 1992.

Small Break loss-of-coolant accident (SBLOCA) data were recorded during tests 9.lb and 6.2 TC in the Boucle d'Etudes Nucleares de Grenoble (CENG) complex in Grenoble, France. The data from test 9.lb form the basis for the International Standard Problem number 27 (ISP-27). For each test the primary system depressurization, break flow rate, core heatup, and effect of operator actions were analyzed. Based on the test 9.lb/ISP-27 and 6.2 TC data, an assessment study of the RELAP5/MOD3 version 7 code was performed which included a study of the above phenomena along with countercurrent flow limitation and vapor pull-through. The code provided a reasonable simulation of the various phenomena which occurred during the tests.

G. P. Rouel and E. J. Stubbe, *Assessment Study of RELAP5/MOD2 Cycle 36.05 Based on the Tihange-2 Reactor Trip of January 11, 1983,* TRACTEBEL, Brussels, Belgium, Nuclear Dept. March 1992.

This report presents a code assessment study for RELAP5/MOD2 Cycle 36.05 based on a plant transient (TIHANGE 2 power plant following reactor trip). The plant trip from full power was performed as part of a commissioning test series on January 11th, 1983, and the most important plant parameters were recorded on a Data Acquisition System (DAS). The analysis by means of the frozen version of the RELAP5/MOD2/Cycle 36.05 code was performed to qualify the plant input deck for this plant and assess the code potential for simulating such transient.

S. Z. Rouhani, "A New Model for ECC [Emergency Core Cooling] Mixing and Condensation in RELAP5/MOD3," *Winter meeting of the American Nuclear Society (ANS) and Nuclear Power and Technology Exhibit; San Francisco, CA, November 1989.*

One of the more difficult processes to model in the loss-of-coolant accident (LOCA) simulation is the mixing of subcooled emergency core coolant (ECC) water with the high-temperature steam and water in the primary coolant system. Applications of RELAP5/MOD2 to the prediction of ECC mixing with steam and water and the subsequent condensation process in the cold leg of simulated pressurized water reactor (PWR) experiments, such as in the upper plenum test facility (UPTF), had shown poor agreement with measured data. The condensation rate was usually underpredicted and, as a result, the calculated pressure transients did not agree with the data. This paper describes a new model for the ECC mixing and condensation process developed for the RELAP5/MOD3 computer code, referred to as the ECCMIX component.

A. E. Ruggles and D. G. Morris, "Thermal-Hydraulic Simulation of Natural Convection Decay Heat Removal in the High Flux Isotope Reactor (HFIR) Using RELAP5 and TEMPEST: Part 2, Interpretation and Validation of Results," *RELAP5 Users Seminar, College Station, TX, January 1989.*

The RELAP5/MOD2 code was used to predict the thermal-hydraulic behavior of the High Flux Isotope Reactor (HFIR) core during decay heat removal through boiling natural circulation. The low system pressure and low mass flux values associated with boiling natural circulation are far from conditions for which RELAP5 is well exercised. Therefore, some simple hand calculations are used to establish the physics of the results. The interpretation and validation effort is divided between the time-average flow conditions and the time-varying flow conditions. The time average-flow conditions are

evaluated using a lumped parameter model and heat balance. The Martinelli-Nelson correlations are used to model the two-phase pressure drop and void fraction vs. flow quality relationship within the core region. Systems of parallel channels are susceptible to both density wave oscillations and pressure drop oscillations. Periodic variations in the mass flux and exit flow quality of individual core channels are predicted by RELAP5. These oscillations are consistent with those observed experimentally and are of the density wave type. The impact of the time-varying flow properties on local wall superheat is bounded herein. The conditions necessary for Ledinegg flow excursions are identified. The conditions do not fall within the envelope of decay heat levels relevant to HFIR in boiling natural circulation.

A. E. Ruggles, "Applicability of RELAP5 to Water-Cooled Research Reactor Designs," *Transactions of the American Nuclear Society,* June 1990.

A generalized water-cooled research or production reactor is a nominally subcooled, moderately pressurized system that operates with high coolant velocities in the fuel element region. The behavior of these systems after a rupture in the primary piping is quite different from that which occurs in a power reactor. As a result, the flow conditions and phenomena important to the transient behavior are frequently not well modeled in system codes that were primarily developed and validated for power reactor safety evaluations. Oak Ridge National Laboratory (ORNL) has been reviewing the models and correlations in RELAP5 for applicability in modeling the transient behavior of both the high-flux isotope reactor and the advanced neutron source (ANS). More model development and validation is needed, however, before this code is generally applicable to reactors of this type.

P. Salim and Y. A. Hassan, "A RELAP5/MOD2 Model of a Nuclear Power Plant and Sensitivity Study on the Nodalization Scheme," *Transactions of the American Nuclear Society 57, Joint Meeting of the European Nuclear Society and the American Nuclear Society, Washington, D.C., 1988.*

The complex nature of nuclear power plants makes it essential to have an extensive understanding of its behavior under various operation conditions. One of the analysis methods is to perform simulations on system computer codes. These codes provide the analyst with a tool to predict the system behavior under normal and abnormal conditions. Prior information obtained from such analyses becomes of paramount importance in designing and operating a nuclear power system. The purpose of this study was to develop a RELAP5/MOD2 model of a nuclear power plant and conduct a sensitivity study on the nodalization scheme. Favorable agreement was obtained.

P. Salim and Y. A. Hassan, "Simulation of IAEA's Third Standard Problem Exercise (SPE-3) on RELAP5/MOD3," *Transactions of the American Nuclear Society, November 11-16, 1990.*

With the increasing use of advanced computer codes in nuclear safety assessment, it becomes necessary to closely evaluate the prediction capability of these codes. The purpose of the work presented here is to perform a RELAP5/MOD3 analysis of the International Atomic Energy Agency's (IAEA), PMK-NVH, third standard problem exercise (SPE-3) and to compare it with the experimental data. Sponsored by the IAEA, SPE-3 is performed in cooperation with the Central Research Institute of Physics of the Hungarian Academy of Sciences. The general objective of the SPE is to evaluate the prediction capability

of various thermal-hydraulic computer codes and to assess the level of uncertainty in code calculations. Furthermore, the exercise renders a unique opportunity to investigate a similar plant transient and to assess code performance under significantly different conditions.

O. Sandervag, "Swedish Experience with RELAP5/MOD2 Assessment," *14th Water Reactor Safety Information Meeting, Gaithersburg, Maryland, October 27, 1986,* NUREG-CP-0082, Volume 5, February 1987, pp. 117-132 Studsvik Energiteknik AB, Nykoping, Sweden.

The Swedish assessment of RELAP5/MOD2 is a part of the International Code Assessment Program, which is organized by the U. S. Nuclear Regulatory Commission. The major part of the experimental data used for assessment is of Swedish origin. The data encompass critical-flow-at-level-swell data from the Marviken facility. A part of the agreed assessment matrix has been completed. Comparison with boiling water reactor integral test data show that the major phenomena that control the core cooling during intermediate- and large-break loss-of-coolant accidents are qualitatively reproduced by RELAP5. Assessment against separate and integral experiments shows that the dominant uncertainty in presentation of clad temperatures is due to a poor calculation of dryout. Predicted post-dryout wall temperatures, given the experiment dryout location as input parameter, generally agree well with data. Simulations of level swell following depressurization of the large diameter Marviken vessel showed that RELAP5/MOD2 was able to calculate overall axial void profiles in fair agreement with data. The assessment indicated that increasing the modeling detail could give rise to numerical instabilities. Assessment against large-scale critical flow data revealed that the agreement with data was somewhat dependent on upstream fluid conditions and modeling. Low quality two-phase flow was, in general, accurately predicted while subcooled liquid flow and saturated steam flow were generally overpredicted if no discharge coefficient was applied.

O. Sandervag, "Assessment and Application of RELAP5/MOD2 at STUDSVIK, Use of TRAC-PF1/ MOD1 to Analyze Loss-of-Grid Transients," *13th Water Reactor Safety Information Meeting, Washington, D.C., October 1985*, NUREG/CP-0072, Volume 5, February 1986, Studsvik Energiteknik AB.

The Swedish assessment plans for the advanced computer codes RELAP5/MOD2 and TRAC-PF1 are presented. RELAP5/MOD2 is based on data from experiments of mainly Swedish origin. Preliminary assessment results indicate that predictions of dryout locations and post-CHF temperatures have been improved in MOD2 as compared to MOD1. TRAC-PF1/MOD1 will be assessed using loss of external grid plant transients. One such test with improved instrumentation was conducted in Ringhal's 4 in September 1985.

L. Sardh and K. M. Becker, *Assessments of CHF Correlations Based on Full-Scale Rod Bundle Experiments*, February 1986, Royal Institute of Technology, Stockholm, Sweden.

In the present study, the Barnett, Becker, Biasi, CISE-4, XN-1, Electric Power Research Institute (EPRI), and Bezrukov burnout correlations have been compared with burnout measurements obtained with full-scale 81, 64, 36 and 37-rod bundles. The total power and local power hypotheses were employed for

the comparisons. The results clearly indicated that the Biasi and CISE-4 correlations do not predict the burnout conditions in full-scale rod bundles. Since these correlations yield nonconservative results, their use in computer programs such as RELAP5, TRAC, or NORA should be avoided. Considering that the effects of spacers were not included in the predictions, the Becker and Bezrukoz correlations were in excellent agreement with the experimental data. However, it should be pointed out that the Bezrukov correlation only covered the 70 and 90 bar data, while the Becker correlation agreed with the experimental data in the whole pressure range between 30 and 90 bar. The Barnett, XN-1 and EPRI correlations were also in satisfactory agreement with the experiments. The authors concluded that for predictions of the burnout conditions in full-scale boiling water reactor rod bundles, the Becker correlation should be employed.

E. A. Schneider, *A Station Blackout Simulation for the Advanced Neutron Source Reactor Using the Integrated Primary and Secondary System Model,* 1994

The Advanced Neutron Source Reactor (ANSR) is a research reactor to be built at Oak Ridge National Laboratory. This paper deals with thermal-hydraulic analysis of ANSR's cooling systems during nominal and transient conditions, with the major effort focusing upon the construction and testing of computer models of the reactor's primary, secondary and reflector vessel cooling systems. The code RELAP5 was used to simulate transients, such as loss-of-coolant accidents and loss of offsite power, as well as to model the behavior of the reactor in steady-state. Three stages are involved in constructing and using a RELAP5 model: (1) construction and encoding of the desired model, (2) testing and adjustment of the model until a satisfactory steady-state is achieved, and (3) running actual transients using the steady-state results obtained earlier as initial conditions. By use of the ANSR design specifications, a model of the reactor's primary and secondary cooling systems has been constructed to run a transient simulating a loss of offsite power. This incident assumes a pump coastdown in both the primary and secondary loops. The results determine whether the reactor can survive the transition from forced convection to natural circulation.

R. R. Schultz, Y. Kukita, and K. Tasaka, *Simulation of a TMI-2 Type Scenario at the ROSA-IV Program's Large Scale Test Facility: A First Look*, JAERI-M-84-176, September 1984, Japan Atomic Energy Research Institute.

The Three-Mile Island-2 (TMI-2) type scenario in a Westinghouse (W)-type four loop pressurized water reactor (PWR) was studied in preparation for upcoming tests in the ROSA-IV Program's Large Scale Test Facility (LSTF). The LSTF is a 1/48 scale simulator of a W-type four loop PWR with full-scale component elevation differences. TMI-2 scenario simulation analyses were conducted to establish a pretest prediction database for RELAP5 LSTF's capability to simulate the reference PWR. The basis for such RELAP5 calculations and the similarities between the LSTF and reference PWR thermal hydraulic behaviors during a TMI-2 type scenario are presented.

R. R. Schultz, Y. Kukita, Y. Koizumi, and K. Tasaka, “LSTF Simulation of the TMI-2 Scenario in a Westinghouse Type Four Loop PWR,” *International Meeting on Thermal Nuclear Reactor Safety,*

Karlsruhe, Federal Republic of Germany, September 1984, KFK-3880/1, pp. 467-476, Japan Atomic Energy Research Institute.

The scenario was studied in preparation for upcoming tests in the ROSA-IV Program's Large Scale Test Facility (LSTF). The LSTF is a 1/48 scale simulator of a W-type four-loop pressurized water reactor (PWR) with full-scale component elevation differences. Three-Mile Island (TMI)-2 scenario simulation analyses were conducted to establish a pretest prediction database for RELAP5 code evaluation purposes and furnish a means of evaluating the LSTF's capability to simulate the reference PWR. The basis for such RELAP5 calculations and the similarities between the LSTF and reference PWR thermal-hydraulic behavior during a TMI-2 scenario are presented.

R. R. Schultz, *International Code Assessment and Applications Program: Summary of Code Assessment Studies Concerning RELAP5/MOD2, RELAP5/MOD3, and TRAC-B: International Agreement Report,* December 1993.

Members of the International Code Assessment Program (ICAP) have assessed the U. S. Nuclear Regulatory Commission (USNRC) advanced thermal-hydraulic codes over the past few years in a concerted effort to identify deficiencies, to define user guidelines, and to determine the state of each code. The results of sixty-two code assessment reviews, conducted at INEL, are summarized. Code deficiencies are discussed and user recommended nodalizations investigated during the course of conducting the assessment studies and reviews are listed. All the work that is summarized was done using the RELAP5/MOD2, RELAP5/MOD3, and TRAC-B codes.

A. H. Scriven, *Analysis of LOBI Test BL02 (Three Percent Cold Leg Break) with RELAP5 Code,* Central Electricity Research Labs., Leatherhead, U. K., March 1992.

The Test BL02 was a United Kingdom specified test conducted on the electrically heated 2-loop test system at Ispra, northern Italy, as part of the LOBI 'B' series of tests sponsored by the Joint European Research Commission. The pretest calculations for this test were performed with the RELAP5/MOD1 code and the posttest analysis was carried out using RELAP5/MOD2. Comparisons between the code predictions and the test data are given, and for the case of the posttest MOD2 calculation, detailed studies of the codes performance in a number of areas are included.

A. H. Scriven, *Application of the RELAP5/MOD2 Code to the LOFT Tests L3-5 and L3-6,* National Power, Leatherhead, U. K., April 1992.

RELAP5/MOD2 is being used by National Power Nuclear, Technology Division for calculation of certain small break loss-of-coolant accidents and pressurized transients in the Sizewell “B” PWR. The code version being used in RELAP5/MOD2 cycle 36.05 Winfrith version E03. As part of the program of assessment of this code a number of comparisons of calculations with integral test facility experiments are being carried out. At the request of NPN-TD the LOFT 2.5 cold leg small-break tests L3-5 (pumps off) and L3-6 (pumps on) have been calculated. These previously performed tests involved a number of features,

including stratification, pump performance and offtake effects which suggested they would be useful measures of code performance.

A. H. Scriven, *Pre- and Post-test Analysis of LOBI MOD2 Test ST-02 (BT-00) with RELAP5/MOD1 and MOD2 (Loss of Feed Water),* National Power, Leatherhead, U. K., April 1992.

The experiment ST-02 (later renamed BT-00) is one of a series of Special Transient tests being performed on the electrically heated LOBI facility in Ispra, Italy. This test was designed to simulate a loss of main feedwater transient leading via a steam generator dryout to a long term cooldown using bleed and feed. The RELAP5/MOD2 code has been chosen by the Board for assessment work on the Sizewell Pre-Operation Safety Report. It was originally designed for loss-of-coolant accidents, but is now finding wider applications. RELAP5/MOD1 was used for a pre-test calculation, and RELAP5/MOD2 for the detailed post-test analysis. This was to allow cross-code comparisons, assess the possibility of using RELAP5 for pressurized transients, and because the final phase of bleed and feed which occurs in test ST02 is more representative of small-break transients than pressurized faults. This report documents the results of this calculation and comparisons with the test data. After accounting for test conditions and events outside the original specification the RELAP5/MOD2 code was found to perform rather well.

R. A. Shaw and C. B. Davis, "Simulation of Three-Dimensional Hydrodynamic Components With a One-Dimensional Transient Analysis Code," *Transactions of the American Nuclear Society 1990 Winter Annual Meeting, Washington, D.C., November 11-15, 1990*.

The RELAP5/MOD2 code is a fast-running, user-convenient reactor transient analysis code that has been used to simulate a wide spectrum of thermal-hydraulic transients in both nuclear and nonnuclear systems involving steam-water-noncondensable fluid mixtures. For most of the past decade, however, the Transient Reactor 4 Analysis Code has been the primary code used to simulate transients in which multi-dimensional hydraulic behavior was anticipated. With the inclusion of the crossflow junction into RELAP5, however, it has become possible to use RELAP5 to simulate certain components having multi-dimensional hydraulics, even though RELAP5 is having a one-dimensional code. A novel application of the RELAP5 code to a situation with known three-dimensional hydraulic behavior is presented. The RELAP5 code is currently being used to support restart analyses at the U. S. Department of Energy Savannah River Site (SRS). The computer code and input model were benchmarked against several sets of SRS data to demonstrate their applicability for thermal-hydraulic analysis of SRS production reactors. The benchmarking process provide a significant measure of confidence in the capability of RELAP5 to determine system response in situations where multi-dimensional hydraulic behavior occurs.

R. A. Shaw and D. G. Hall, *Pretest Analysis Document for Test S-FS-6*, EGG-SEMI-6878, May 1985.

This report documents the pretest analyses completed for Semiscale Test S-FS-6. This test simulated a transient initiated by a 100% break in a steam generator bottom feedwater line downstream of the check valve for a Combustion Engineering, Inc. System 80 nuclear power plant. Predictions of transients resulting from feedwater line breaks in these plants have indicated that significant primary system overpressurization may occur. The enclosed analyses include a RELAP5/MOD2/21 code calculation and

preliminary results from a facility hot integrated test that was conducted to near S-FS-6 specifications. The results of these analyses indicate that the test objectives for Test S-FS-6 can be achieved. The primary system overpressurization will pose no threat to personnel or plant integrity.

R. A. Shaw, S. Z. Rouhani, T. K. Larson, and R. A. Dimenna, *Development of a Phenomena Identification and Ranking Table (PIRT) for Thermal-Hydraulic Phenomena during a PWR Large Break LOCA*, EGG-2527, November 1988.

The U. S. Nuclear Regulatory Commission (NRC) is proposing to amend its regulations to permit the use of best-estimate safety analysis codes to demonstrate that the emergency core cooling system would protect the reactor core during a postulated loss-of-coolant accident (LOCA). A key feature of this proposed rule is that the licensee will be required to quantify the uncertainty of the best-estimate calculations and include that uncertainty when comparing the calculated results with the Appendix K limits. The NRC has further proposed a code scaling, applicability, and uncertainty evaluation methodology. One of the cornerstones of that methodology is the identification and ranking of all the processes that occur during a specific scenario. The ranking is done according to importance during the scenario and is used to limit the uncertainty analysis to a sufficient but cost-effective scope. The work reported in this document identifies the thermal-hydraulic phenomena that occur during a large-break LOCA in a Westinghouse four-loop pressurized water reactor and ranks the relative importance of each with respect to peak cladding temperature.

A. S. L. Shieh, R. Krishnamurthy, and V. H. Ransom, "Stability, Accuracy, and Convergence of the Numerical Methods in RELAP5/MOD3," *Nuclear Science and Engineering; 116,* pp. 227-244, 1994.

Both theoretical and numerical results on the relationships between the magnitude of the interphase drag coefficients, the mesh size, and the stability of the semi-implicit method used in RELAP5 are presented. It is shown that the numerical solutions are both stable and convergent on meshes with a characteristic ratio (ratio of mesh size-to-hydraulic diameter) that is not too small, that the code is capable of simulating physical instabilities on coarse meshes, and that unphysical instabilities will occur only at small mesh size even for problems that admit physical instabilities. Good transition from pre-critical heat flux (CHF) to post-CHF, however, is necessary to improve the accuracy of certain calculations.

N. Shinozawa, M. Fujisaki, M. Makino, K. Kondou, and M. Ishiguro, *Conversion Tool for the LWR Transient Analysis Code RELAP5 from the CDC Version to the FACOM Version*, JAERI-M-86-186, January 1987, Japan Atomic Energy Research Institute, Tokyo.

The light water reactor transient analysis code RELAP5 was developed on the Control Data Corporation (CDC)-CYBER 176 at the Idaho National Engineering Laboratory. The RELAP5 code has often been updated to extend the analyzing model and correct the errors. At the Japan Atomic Energy Research Institute, the code was converted from the CDC version to the FACOM version and the converted code was used. The conversion consumes a lot of time because the code is large and there is a difference between CDC and FACOM machines. To convert the RELAP5 code automatically, the software tool was developed. By using this tool, the efficiency for converting the RELAP5 code was

improved. Productivity of the conversion is increased about 2.0 to 2.6 times in comparison with the manual. The procedure of conversion by using the tools and the option parameters of each tool are described.

L. M. Shotkin, "Completion of Thermal-Hydraulic Code Development: TRAC-PF-1/MOD2, RELAP5/MOD3, and TRAC-BF1/MOD1," *Transactions of the Eighteenth Water Reactor Safety Information Meeting, Gaithersburg, MD, October 1990, p. 211.*

During the last 15 years, the NRC Office of Nuclear Regulatory Research (RES) engaged in research to develop computer codes that would calculate realistically the response of light water reactors to transients and loss-of-coolant accidents (LOCA). The purpose of this paper is to apprise the technical community that the development program was completed with the release of the final versions of these codes (TRAC-PF1/MOD2, RELAP5/MOD3, and TRAC-BF1/MOD1) in 1990. Thermal-hydraulic systems codes were developed to provide the NRC staff with an independent capability to analyze plant transients. Two versions of the Transient Reactor Analysis Code (TRAC) were developed, for PWRs (TRAC-PWR) and for BWRs (TRAC-BWR). The TRAC code treats the vessel in three-dimensions and other fluid systems in one-dimension. Its development dates from 1975. A third code, RELAP, treats the entire system in one-dimension. Its development dates from 1966. The codes have now reached a state of sufficient maturity such that further work would not be expected to yield major gains in accuracy. Following the release of the codes in 1990, the ICAP participants are carrying out independent code assessment. By the end of 1991, the mission of ICAP will be completed, and a successor program will take effect to maintain a code-users group focused on: 1. code applications for plant safety analysis; and 2. code maintenance.

R. W. Shumway, *New Critical Heat Flux Method for RELAP5/MOD3*, EGG-EAST-8443, January 1989.

The RELAP5/MOD2 computer program has been criticized for using the Biasi correlation to predict the critical heat flux in rod bundles when the correlation is based on tube data. In addition, the Royal Institute of Technology in Sweden tested MOD2 against their tube data and found it to generally overpredict the value of the critical heat flux. This report discusses the updates that result in MOD3 using the 1986 Atomic Energy of Canada, Limited-University of Ottawa table lookup method for critical heat flux. The table is made from tube data but has multiplying factors to allow application to rod bundles. In addition, it considers both forward and reverse flow and the effect of boundary layer changes at both the bundle inlet and behind grid spacers. The new model has been tested against both tube and rod bundle data. Generally, the results are better with the new model particularly in the mid-mass flux range.

R. W. Shumway, J. R. Larson, and J. L. Jacobson, *Applicability of RELAP5/MOD2 to N-Reactor Safety Analysis Part 1 -- Quick Look Evaluation*, EGG-TFM-8026, February 1988.

This report is Part 1 of a two-part evaluation of the ability of the RELAP5 computer code to calculate N-Reactor transients. The RELAP5/MOD2 computer code, in modified form, has been used by EG&G Idaho, Inc. and Westinghouse Hanford to model hypothetical N-Reactor transients. Because RELAP5/MOD2 was developed primarily to model commercial pressurized water reactors, which have vertical fuel

channels, its ability to accurately calculate the thermal hydraulic phenomena in N-Reactor type horizontal fuel channels has never been assessed. Part 1 of this study relies on readily available modeling information, and Part 2 involves obtaining horizontal channel data and making new calculations and data comparisons.

A. Sjoeberg and D. Caraher, *Assessment of RELAP5/MOD2 Against 25 Dryout Experiments Conducted at the Royal Institute of Technology*, NUREG/IA-0009, October 1986, Swedish Nuclear Power Inspectorate.

RELAP5/MOD2 simulations of post-dryout heat transfer in a 7-m long, 1.5-cm diameter heated tube are reported. The Biasi critical heat flux correlation is shown to be inadequate for predicting the experimental dryout. RELAP5 accurately predicted the measured temperatures downstream of the dryout once it was forced to predict dryout at the experimentally measured location.

S. M. Sloan and Y. Hassan, "Simulation of Loss of Coolant Accident: Results of a Standard Problem Exercise of the International Atomic Energy Agency," *Transactions of the American Nuclear Society,* June 1989.

The purpose of this study was to compare the results generated from the IBM version of RELAP5/MOD2 to the experimental data of an International Atomic Energy Agency (IAEA) standard problem exercise. The standard problem exercise data were that of a 7.4% break loss-of-coolant accident conducted at a test facility in Hungary. The United States did not formally participate in this exercise whose aim was to assess the capabilities of computer codes and modeling techniques and in which a total of 17 organizations from 12 countries participated. The results obtained using the IBM version of RELAP5/MOD2 compared favorably with the experimental data. The experimental facility, PMK-NVH (Paks Model Circuit), is a scaled-down model of a Hungarian reactor, the VVER-440 Paks nuclear power plant. A volume and power scaling ration of 1:2070 is used. The six loops of the actual reactor are modeled by one active loop called the PMK. The secondary loop in the experimental facility is the NVH loop. The coolant in the facility is water, and the operating conditions are the same as in the actual reactor. The orientation of the steam generator is horizontal, as opposed to the vertical design of once-through and U-tube steam generators. The parameters of the accident are that it starts at full power, a 3-mm cold-side break occurs at the upper head of the downcomer, there is no injection from hydroaccumulators, the high-pressure injection system corresponds to the case in which one-third of the pumps are available, and isolation of the secondary occurs immediately after transient initiation.

S. M. Sloan and Y. A. Hassan, *A Study of RELAP5/MOD2 and RELAP5/MOD3 Predictions of a Small-Break Loss-of-Coolant Accident Simulation Conducted at the ROSA-IV Large-Scale Test Facility,* October 1992

The thermal-hydraulics simulation codes RELAP5/MOD2 and RELAP5/MOD3 are utilized to calculate the phenomena that occurred during a small-break loss-of-coolant accident (LOCA) simulation conducted at the ROSA-IV Large-Scale Test Facility. In this paper the RELAP5/MOD2 and RELAP5/MOD3 predictions are compared with each other and assessed against the experimental results. The overall conclusion is that both code versions predict trends well, but each differs in the prediction of the magnitude and timing of concurrences. Specific areas of difference include primary system pressure, differential

pressure in the upper plenum, core liquid level depression and subsequent heatup, core void fraction profile, and the differential pressure in the steam generator inlet plenum. All but the last of these differences are related to the RELAP5/MOD3 prediction of excessive liquid holdup in the upper plenum during the first core liquid depression, which is believed to lead to the prediction of water trickling into the upper core volumes and providing a cooling mechanism not present during the experiment. The liquid holdup is believed to be the result of an overprediction of interphase drag at the junctions between the upper plenum volumes.

G. C. Slovik, U. S. Rohatgi, and J. Jo, *RELAP5/MOD2.5 Analysis of the HFBR [High Flux Beam Reactor] for a Loss of Power and Coolant Accident*, BNL-52243, May 1990.

A set of postulated accidents were evaluated for the High Flux Beam Reactor (HFBR) at Brookhaven National Laboratory. A loss-of-power accident (LOPA) and a loss-of-coolant accident were analyzed. This work was performed in response to a U. S. Department of Energy review that wanted to update the understanding of the thermal-hydraulic behavior of the HFBR during these transients. These calculations were used to determine the margins to fuel damage at the 60-MW power level. The LOPA assumes all the backup power systems fail (although this event is highly unlikely). The reactor scrams, the depressurization valve opens, and the pumps coast down. The HFBR has downflow through the core during normal operation. To avoid fuel damage, the core normally goes through an extended period of forced downflow after a scram before natural circulation is allowed. During a LOPA, the core will go into flow reversal once the buoyancy forces are larger than the friction forces produced during the pump coast down. The flow will stagnate, reverse direction, and establish a buoyancy driven (natural circulation) flow around the core. Fuel damage would probably occur if the critical heat flux (CHF) limit is reached during the flow reversal event. The RELAP5/MOD2.5 code, with an option for heavy water, was used to model the HFBR and perform the LOPA calculation. The code was used to predict the time when the buoyancy forces overcome the friction forces and produce upward directed flow in the core. The Monde CHF correlation and experimental data taken for the HFBR during the design verification phase in 1963 were used to determine the fuel damage margin.

A. J. Smethurst, *Post-test Analysis of LOBI Test BT-12 Using RELAP5/MOD2,* Atomic Energy Establishment, Winfrith, U. K., April 1992.

This report describes calculations carried out with RELAP5/MOD2 on LOBI experiment BT-12, a large steam line break. The following sensitivity studies were performed; heat losses on the intact steam generator; discharge coefficient at break; water in steam lines; nearly-implicit numerics. Qualitatively the general trends of BT-12 were predicted well, in particular the timing of events was fairly accurate.

A. Sozer and M. W. Wendel, “Solid Primary Coolant system Response to a Small Break,” *Annual meeting of the American Nuclear Society, Orlando, FL, June 2-6 1991.*

How does a pressurized primary coolant system completely filled with liquid water respond to a small break? Postulated small- and large-break loss-of-coolant accidents (LOCAs) at commercial pressurized water reactors (PWRs) and boiling water reactors (BWRs) have been studied numerous times.

To the best of the authors knowledge there is no study of LOCAs for nuclear reactors having solid primary coolant systems (no gas/vapor space and filled with compressed liquid water) in the open literature. LOCA analysis is preformed for the High-Flux Isotope Reactor (HFIR) having a solid primary coolant system. The reactor is light water cooled and moderated. The well known RELAP5 computer code is the primary tool used in the LOCA studies. The HFIRSYS computer code, specific to the HFIR is used in support of RELAP5 LOCA calculations and for performing system transients. No fuel damage is likely to occur during the transient.

H. Stadtke, "JRC ISPRA Contribution to the Improvement of RELAP5/MOD2," *16th Water Reactor Safety Information Meeting, Gaithersburg, MD, March 1989*, Commission of the European Communities, Ispra, Italy.

The assessment of the RELAP5/MOD2 code within the framework of the International Code Assessment and Applications Program (ICAP) has identified various modeling deficiencies and a strong need for a further development of this code. For this reason, a multinational effort, coordinated by the ICAP Technical Program Group, has been started for the improvement of RELAP5/MOD2. The Joint Research Centre (JRC) Ispra contribution to this activity is based on the experience gained from the improvement of RELAP5/MOD1. The paper summarizes several modifications and model improvements that have been implemented into a JRC Ispra version of RELAP5/MOD2. This concerns the calculations of state properties for vapor and steam, interphase drag coefficients, occurrence of stratified conditions in horizontal pipes, and critical flows for saturated (two-phase) conditions. The results of these model improvements are demonstrated by the comparison of calculated values using the original and modified versions of RELAP5/MOD2 with separate effect and integral test data.

H. Stadtke and W. Kolar, "JRC Ispra Results from Assessment of RELAP5/MOD2 on the Basis of LOBI Test Data," *15th Water Reactor Safety Information Meeting, Gaithersburg, MD, October, 26, 1987*, February Commission of the European Communities, Ispra, Italy.

In the framework of the LOBI project, various RELAP5 code versions have been used extensively for test design calculations, pretest predictions and posttest analysis. Important results from assessment calculations and code sensitivity studies performed in 1986/1987 with RELAP5/MOD2 are presented in this paper. The assessment cases include small break loss-of-coolant accident and special transients experiments. From the comparison of measured and predicted parameters, conclusions are drawn on the prediction capabilities of RELAP5/MOD2. Specific problems observed with regard to the automatic time step control, flow regime selection, interphase heat transfer, and break mass flow calculations are analyzed. The significance of these deficiencies are described and recommendations are given for the improvement of the RELAP5 code.

H. Stadtke et al., "Post-Test Analysis of LOBI-MOD2 Special Transients Tests Using RELAP5," *American Nuclear Society Anticipated and Abnormal Transients in Nuclear Power Plants, Atlanta GA, April 1987*, Joint Research Centre - Ispra Establishment.

The LOBI-MOD2 integral test facility is a 1/700 scaled model of a pressurized water reactor operated at the Joint Research Centre of the European Communities in Ispra, Italy. Within the LOBI-MOD2 test program, three experiments simulating special transient scenarios in a pressurized water reactor have been performed so far: (a) loss of normal onsite and offsite power with failure of automatic scram system (Test A2-90), (b) loss of main feedwater (Test BT-00), and (c) small steam line break (Test BT-01). For all three experiments, various pretest and posttest predictions have been performed with the reactor safety codes RELAP5/MOD1-EUR, an improved version of RELAP5/MOD1, and RELAP5/MOD2. In general, the predicted system behavior shows a good qualitative and quantitative agreement with the measured data for the short-term transient (5 to 10 minutes). The relatively large deviations observed for the long-term transients (2 to 4 hours) are a result of both deficiencies in codes and uncertainties in defining second-order effects like heat losses, structural heat, bypass flows, and small leakages. In the paper, a comparison of measured and predicted key parameters will be given for all three experiments and existing discrepancies will be analyzed. Specific emphasis will be give to the codes' capabilities to describe the governing phenomena including (a) single- and two-phase natural circulation in the primary system at high pressure, (b) mismatch between power generated in the core and the heat removal by the steam generators, (c) pressurizer insurge and fluid temperature stratification, (d) heat transfer conditions in the steam generators with reduced mass inventory on the secondary side, and (e) modeling of complex control circuits and valve operation. From the analysis of existing discrepancies between measured and predicted system behavior, recommendations will be given for a further improvement of the analytical capabilities of RELAP5 for special transient calculations.

H. Stadtke and B. Worth, “JRC Ispra Contribution to the Assessment and Improvement of RELAP5,” *Seminar on the Commission Contribution to Reactor Safety Research, Varese, Italy, November 20-24, 1989.*

Various RELAP5 code versions have been used extensively within the framework of the LWR Off-normal Behavior Investigations project at the Joint Research Centre Ispra for pretest predictions and posttest analyses. The codes applied include the original versions of RELAP5/MOD1 and MOD2 as supplied by the code developer, as well as versions substantially modified at the JRC. The work performed can be considered as a significant contribution to the international effort for the assessment of the RELAP5 code. The results obtained clearly demonstrates the prediction capability of the RELAP5 code and indicate where further code improvements are necessary.

R. Steinke et al., “Nuclear Plant Analyzer: An Interactive TRAC/RELAP Power-Plant Simulation Program,” *Proceedings of the International Conference on Power Plant Simulation, Mexico City, Mexico, November 1984*.

The Nuclear Plant Analyzer (NPA) is a computer-software interface for executing the TRAC or RELAP5 power plant systems codes. The NPA is designed to use advanced supercomputers, long-distance data communications, and a remote workstation terminal with interactive computer graphics to analyze power plant thermal-hydraulic behavior. The NPA interface simplifies the running of these codes through automated procedures and dialog interaction. User understanding of simulated plant behavior is enhanced through graphics displays of calculational results. These results are displayed concurrently with the

calculation. The user has the capability to override the plant's modeled control system with hardware adjustment commands. This gives the NPA the utility of a simulator and the accuracy of an advanced, best-estimate, power plant systems code for plant operation and safety analysis.

P. M. Stoop, J. P. A. VanDenBogaard, A. Woudstra, and H. Koning, "Application of RELAP5/MOD2 for Determination of Accident Management Procedures," *15th Water Reactor Safety Information Meeting, Gaithersburg, MD, October 26, 1987*, Netherlands Energy Research Foundation, Petten.

This paper presents the results of a number of severe accident transient analyses, which have been performed for the two nuclear power plants (NPPs) under operation in the Netherlands, using the RELAP5/MOD2 computer program. The two NPPs include a natural circulation boiling water reactor (BWR) of the early General Electric design, and a pressurized water reactor (PWR) of the Kraftwerk Union design. The transients considered include station blackout, anticipated transient without scram, primary feed and bleed (PWR), and intermediate break loss-of-coolant accident (BWR). All transients considered may potentially end up in a core melt situation. The influence of the operator action on the course of the transient events has been investigated, especially with respect to the possibility of depressurizing the plant before core melt actually occurs. The results of the analyses serve as input for a safety evaluation of both NPPs presently being performed as part of the post-Chernobyl activities in the Netherlands.

J. E. Streit and W. E. Owca, *Pretest Analysis Document for Test S-NH-2*, EGG-RTH-7101, November 1985.

This report documents the pretest calculations completed with the RELAP5/MOD2/36.01 code for Semiscale MOD-2C Test S-NH-2. The test simulated the transient that results from the shear in a small diameter penetration of a cold leg, equivalent to 2.1% of the cold leg flow area. The high-pressure injection system was assumed to be inoperative throughout the transient. The recovery procedure consisted of latching open both steam generator atmospheric dump valves, supplying both steam generators with auxiliary feedwater, and injecting water by normal accumulator operation. The auxiliary feedwater system was assumed to be partially inoperative so the auxiliary feedwater flow was degraded. Recovery was initiated upon a peak cladding temperature of 811 K (100°^{o}F). The test was terminated when primary pressure had been reduced to the low-pressure injection system setpoint of 1.38 MPa (200 psia). The calculated results indicate that the test objectives can be achieved and the proposed test scenario poses no threat to personnel or plant integrity.

E. J. Stubbe, *International Agreement Report: Assessment Study of RELAP5/MOD2/Cycle-36.01 Based on the DOEL 2 Steam Generator Tube Rupture Incident of June 1979*, NUREG/IA-0008, October 1986, TRACTIONEL - Brussels, Belgium.

This report presents a code assessment study based on a real plant transient that occurred at the DOEL-2 power plant in Belgium on June 25, 1979. DOEL-2 is a two-loop Westinghouse pressurized water reactor plant of 392 MWe. A steam generator tube rupture occurred at the end of a heatup phase, which

initiated a plant transient that required substantial operator involvement and presented many plant phenomena of interest for code assessment. While real plant transients are of special importance for code validation because of the elimination of code scaling uncertainties, they introduce some uncertainties related to the specifications of the exact initial and boundary conditions. These conditions must be reconstructed from available on-line plant recordings and on-line computer diagnostics. Best-estimate data have been reconstructed for an assessment study with RELAP5/MOD2/36.01. Because of inherent uncertainties in the plant data, the assessment work is focussed on phenomena where the comparison between plant data and computer data is based more on trends than on absolute values. Such an approach is able to uncover basic code weaknesses and strengths that can contribute to a better understanding of the code potential. This work was performed by TRACTIONEL, the Architect-Engineer for all DOEL plants, in cooperation with the utility EBES, which owns and runs these plants.

E. J. Stubbe and L. Vanhoenacker, "Application of RELAP5 to Analysis of the DOEL Steam Generator Tube Rupture and Studies of the Loss of Feedwater Line Break Transients," *13th Water Reactor Safety Research Information Meeting, Washington, D. C., October 1985*, TRACTIONEL, Brussels, Belgium.

The RELAP5 code has been used extensively since 1981 as the main thermal-hydraulic system code at TRACTIONEL. The principle analyses concerned the DOEL 1 and 2 power plants (392 MWe, 2-loop pressurized water reactors), which are not strictly covered by the existing vendor studies. The purposes of the study were to: (a) improve the understanding of various phenomena occurring during postulated plant transients, (b) update the various emergency procedures and improve operator interventions, (c) re-analyze some accident analyses in the framework of the 10-year revision of those plants, and (d) define and analyze the pressurized thermal shock limiting transients. This paper concludes with some specific remarks about the need to freeze the code in its actual state.

E. J. Stubbe, *Assessment of RELAP5/MOD2 Cycle 36.04 Based on the DOEL-4 Manual loss of Load Test of November 23, 1985,* TRACTEBEL, Brussels, Belgium, March 1992.

The loss of external load test conducted on the DOEL-4 power plant has been analyzed on the basis of a high quality data acquisition system. A detailed numerical analysis of the transient by means of the best estimate code RELAP5/MOD2 is presented. The RELAP5 code is capable to simulate the basic plant behavior. Deficiencies noted involved structural heat simulation, acoustic phenomena, and excessive interphase drag.

E. J. Stubbe, L. VanHoenacker, and R. Otero, *RELAP5/MOD3 Assessment for Calculation of Safety and Relief Valve Discharge Piping Hydrodynamic Loads: International Agreement Report,* TRACTEBEL, Brussels, Belgium, February 1994.

This report presents an assessment study for the use of the code RELAP5/MOD3 5m5 in the calculation of transient hydrodynamic loads on safety and relief discharge pipes. Its predecessor, RELAP5/MOD1, was found adequate for this kind of calculations by EPRI. The hydrodynamic loads are very important for the discharge piping design because of the fast opening of the valves and the presence of liquid in the upstream loop seals. The code results are compared to experimental load measurements

performed at the Combustion Engineering Laboratory in Windsor (U. S.). Those measurements were part of the PWR Valve Test Program undertaken by EPRI after the TMI-2 accident. This particular kind of transients challenges the applicability of the following code models; two-phase choked discharge; interphase drag in conditions with large density gradients; heat transfer to metallic structures in fast changing conditions; two-phase flow at abrupt expansions. The code applicability to this kind of transients is investigated. Some sensitivity analyses to different code and model options are performed. Finally, the suitability of the code and some modeling guidelines are discussed.

J. L. Thompson, J. S. Miller, and J. R. White "RELAP5 Simulation of Reactor Water Backflow into the High-Pressure Core Spray System Piping," *Winter meeting of the American Nuclear Society and Nuclear Power and Technology Exhibit; San Francisco, CA, November 1989.*

On August 15, 1988, a loss of electric load occurred at the River Bend Station boiling water reactor. With the unit at 100% power, the reactor automatically scrammed due to a turbine control valve fast closure caused by automatic main generator and turbine trips. Due to hydraulically induced high-frequency oscillations in the water level instrumentation reference legs, the high pressure core spray (HPCS) and reactor core isolation cooling systems injected water into the reactor vessel. Subsequent to shutoff of the HPCS pump, reactor water was observed to flow into the HPCS system. Several questions arose concerning the safety consequences of this event. The RELAP5/MOD2 code and other support computer programs and calculations were used to answer these questions. The results presented in this paper provide evidence that an onsite organization capable of responding to safety questions for these type of events can be very important in ensuring that the plant continues to operate in a safe and reliable manner.

G. D. Tin, G. Sobrero, X. J. Chen, T. N. Veziroglu, and C. L. Tien, "Posttest Analysis of LOBI-MOD2 Loss of Main Feedwater Test Using RELAP5/MOD2," *Second International Symposium on Multiphase Flow and Heat Transfer, Xiam, China, September 18-21, 1989.*

This paper describes a posttest analysis to assess the RELAP5/MOD2 performance in the application to the loss of feedwater test BT-00 performed in the LOBI-MOD2 facility of the Joint Research Centre of the European Community at Ispra (Italy). The analysis concerns the middle term transient (time period 200 to 5200 s). Several cases have been analyzed to check the influence of the steam generation nodalization and the steam generators heat loss on the code predictions.

P. Ting, R. Hanson, and R. Jenks, *International Code Assessment and Applications Program, Annual Report*, NUREG-1270, Volume 1, March 1987.

This is the first annual report of the International Code Assessment and Applications Program (ICAP). ICAP was organized by the Office of Nuclear Regulatory Research, U. S. Nuclear Regulatory Commission (NRC) in 1985. ICAP is an international cooperative reactor safety research program planned to continue over a period of approximately five years. To date, eleven European and Asian countries/ organizations have joined the program through bilateral agreements with NRC. Seven proposed agreements are currently under negotiation. The primary mission of ICAP is to provide independent assessment of the three major advanced computer codes (RELAP5, TRAC-PWR, and TRAC-BWR)

developed by NRC. However, program activities can be expected to enhance the assessment process throughout member countries. The codes were developed to calculate the reactor plant response to transients and loss-of-coolant accidents. Accurate prediction of normal and abnormal plant response using the codes enhances procedures and regulations used for the safe operation of the plant and also provides a technical basis for assessing the safety margin of future reactor plant designs. ICAP is providing required assessment data that will contribute to quantification of the code uncertainty for each code. The first annual report is devoted to coverage of program activities and accomplishments between April 1985 and March 1987.

H. Tuomisto, *Thermal-Hydraulics of the Loviisa Reactor Pressure Vessel Overcooling Transients*, June 1987, Imatran Voima Oy, Helsinki, Finland.

In the Loviisa reactor pressure vessel safety analyses, the thermal-hydraulics of various overcooling transients have been evaluated to give pertinent initial data for fracture-mechanics calculations. The thermal-hydraulic simulations of the developed overcooling scenarios have been performed using best-estimate thermal-hydraulic computer codes. Experimental programs have been carried out to study phenomena related to natural circulation interruptions in the reactor coolant system. These experiments include buoyancy-induced phenomena such as thermal mixing and stratification of cold high-pressure safety injection water in the cold legs and the downcomer, and oscillations of the single-phase natural circulation. In the probabilistic pressurized thermal shock study, the Loviisa training simulator and the advanced system code RELAP5/MOD2 were used to simulate selected sequences. Flow stagnation cases were separately calculated with the REMIX computer program. The methods employed were assessed for these calculations against the plant data and Imatran Voima Oy's experiments.

H. Tuomisto, B. Mohsen, and H. Kantee, “Thermal Hydraulic Analyses of Selected Overcooling Transients in the Probabilistic PTS Study of the Loviisa Reactor Pressure Vessel,” *European Nuclear Conference '86 Transactions, Geneva, Switzerland, June 1986*, Technical Research Centre of Finland.

An integral probabilistic study of pressurized thermal shock to a reactor vessel has been performed at the Loviisa Nuclear Power Station in Finland. Scenarios for all overcooling events have been developed using an event tree formalism. The Loviisa training simulator, which contains a two-phase primary circuit SMABRE model, has been used to predict the thermal-hydraulic response of the plant to selected overcooling sequences. The training simulator has been validated for overcooling transient analyses by comparing predictions with actual plant transients and by benchmark calculations with RELAP5/MOD2. Special attention has been given to prediction of flow stagnation cases.

J. R. Venhuizen and E. T. Laats, “Development of a Full Scope Reactor Engineering Simulator,” *Summer Computer Simulation Conference, Seattle, WA, July 25, 1988.*

The Idaho National Engineering Laboratory (INEL) is pursuing the development of an engineering simulator for use by several agencies of the U. S. Government. This simulator, which is part of the INEL Engineering Simulation Center, will provide the highest fidelity simulation with initial objectives for studying augmented nuclear reactor operator training, and later objectives for advanced concepts testing

applicable to control room accident diagnosis and management. The simulator is being built for the Advanced Test Reactor (ATR) located at the INEL. The ATR is a 250 MW light water nuclear reactor designed to study the effects of intense radiation on samples of reactor materials. A modernization of the reactor control room (RCR) is underway to enhance reliable and efficient operation of the reactor for the next 20 years. A new simulator facility has been constructed for the RCR to support operator training requirements. The simulator, completed in April 1988, will undergo a major upgrade by replacing the simplified core physics and fluid dynamics models with the widely used RELAP5 simulation code. When completed, the RELAP5 code will operate on a CRAY X-MP/24 computer and communicate with the ATR simulator, which is some 50 miles away. The high fidelity engineering simulator will then be used to train operators to recognize and respond to severe accident scenarios, a feature never before possible with previous simulators. The unique combination of the new simulator, communications, and computing hardware demonstrates a major product of the INEL Engineering Simulation Center.

P. Vuorio, H. Tuomisto, and J. Miettinen, "Assessment of the RELAP5 and SMABRE Phase Separation Models Against Full-Scale Loop Seal Experiments," *Third International Topical Meeting on Nuclear Power Plant Thermal Hydraulics and Operations, Seoul, Korea, November 1988,* Technical Research Centre of Finland.

Full-scale experiments of the two-phase flow behavior in the cold leg loop seal of a pressurized water reactor have been performed in Imatran Voima Oy, Finland. The results of these experiments have been used to assess the two-phase calculation capability of the thermal-hydraulic system codes RELAP5/MOD1, RELAP5/MOD2, and the fast running code SMABRE. The results indicate that flow regime maps of both RELAP5 versions are not sufficiently accurate to make satisfactory code predictions. On the basis of the experimental results, an improved phase separation model is proposed for the loop seal geometry using the formulation for a two-fluid model and the drift-flux model. The drift-flux model of the SMABRE code makes modifications easier. As a result, a better correspondence with the experimental results can be obtained. The improved model was demonstrated with the SMABRE code.

J. L. Wang, J. F. Kunze, and C. J. McKibben, "LOCA Analysis of a Proposed Power Increase for MURR Using RELAP5/MOD2," *Transactions of the American Nuclear Society*, November 1987, pp. 698-699.

The University of Missouri Research Reactor (MURR) has been licensed to operate at 10-MW power since 1974. A preliminary study to increase its present power to a much higher level (Ý30 MW) shows that this is readily achievable for steady-state operating conditions. The methods used to approach the goal of power upgrade operation include the flattening of the radial power distribution by varying the fuel loading of the plates, and the changing of operating conditions to provide a somewhat higher flow rate and greater heat exchanger capability. These changes are easily accomplished without major alternations to that portion of the primary system within the pool section of the loop. However, one of the principal considerations in the power upgrade study for licensing is the loss-of-coolant accident, which is addressed in this analysis.

S. Wang, C. Wu, and J. Wang, "Assessment of the RETRAN02/MOD3 and RELAP5/MOD2 Pressurizer Model," *Transactions of the American Nuclear Society*, November 1987, pp. 704-705.

The pressurizer in pressurized water reactor (PWR) power plants plays an important role in determining the pressure history of the primary coolant system. Thus, accurate modeling of the pressurizer is needed to simulate overall PWR power plant behavior during transients. The purpose of this paper is to present an assessment of the pressurizer model in the RETRAN02/MOD3 and RELAP5/MOD2 codes by using data from nuclear power plants. The data are from two tests at the Maanshan power plant, one test at the Shippingport nuclear power plant, and the Three Mile Island accident. The results are shown to be in good agreement with the test data.

L. W. Ward, W. Arcieri, and C. Heath, *Consequences of the Loss of the Residual Heat Removal Systems in Pressurized Water Reactors,* May 1992.

During the shutdown at Vogtle Unit 1 on March 20, 1990, the loss of vital AC power and the Residual Heat Removal System (RHRS) focused much attention on the need to evaluate system performance following such an event in light water reactor (LWR) facilities. The RELAP5/MOD3 transient, nonequilibrium system performance code and an alternate methodology were used to evaluate this scenario and to investigate the accident consequences and identify key phenomenological and system behaviors characterizing these events. To investigate thermal-hydraulic behavior following a loss of the RHRS, studies evaluated the use of the steam generators as an alternative for removing decay heat from mid-loop operation. Additional studies investigated the effects of decay power and changes in reactor coolant system (RCS) water level on system behavior when attempting to use the steam generators for heat removal. Under these alternative heat removal conditions, analysis identified the time to core uncovery in the event a nozzle dam or the temporary thimble tube seal fails. Other evaluations included assessing the impact of a loss of the RHRS with the reactor vessel internals in place and the upper head removed. For some plant designs, the flow restrictions through the upper internals may inhibit the downflow of water from the refuel pool cavity to the core during boiling, which could lead to the long-term uncovering of the fuel Lastly, in the event boiling occurs in an open RCS, the impact of the addition of borated water for extended periods of time was investigated to identify the potential for boric acid precipitation.

T. Watanabe and Y. Kukita, *Analysis of ROSA-IV/LSTF Experiment Simulating the Mihama Unit-2 Steam Generator U-Tube Rupture Incident by Using RELAP5/MOD2 Code,* Japan Atomic Energy Research Inst., Tokyo, Japan, February 1993.

The analysis of the ROSA-IV/LSTF experiment, Run SB-SG-06, simulating the Mihama Unit-2 steam generator tube rupture (SGTR) incident was performed by using the RELAP5/MOD2 code. The objectives of the analysis are to assess the code and the input data for SGTR experiment analyses, and to evaluate the predictive capability of the code for the characteristic phenomena in SGTR incidents. Major transient parameters including break flow rate, primary pressure, fluid temperatures, and natural circulation flow rates, were predicted very well, while the SG secondary side liquid levels and pressure increase in the broken SG secondary sides were overestimated. These are probably due to a relatively rough noding in the SG secondary side used in the analysis and to the limitation in the vertical stratification model of the code. The steam in the pressurizer was found in the analysis to penetrate into the hot leg after loss of pressurizer liquid level, as was observed in the experiment. The void fraction in the hot leg was,

however, underestimated. The flow regime in the hot leg during this period was bubbly, and the stratified flow seen in the experiment was not calculated. This is because the calculated steam velocity in the hot leg was larger than the criterion for the horizontal stratification.

T. Watanable, Y. Kukita, and M. Wang, *Analysis of ROSA-IV/LSTF Experiment Simulating a Steam Generator Tube Rupture Design Basis Incident by Using RELAP5/MOD2 Code,* Japan Atomic Energy Research Inst., Tokyo, Japan, March 1993

The experiment (RUN SB-SG-07), which simulated the design-basis steam generator tube rupture (SGTR) scenario for a pressurized water reactor (PWR), was conducted at the ROSA-IV/LSTF. The analysis of this experiment was performed using the RELAP5/MOD2 code, and the predictive capability of the code for the characteristic phenomena in SGTR incidents was assessed against experimental data. This experiment and the analysis were performed after the experiment simulating the Mihama Unit-2 SGTR incident (Run SB-SG-06) and its analysis. The analytical results predicted well the behavior of major parameters in the experiment. However, in detail, the following differences between the experiment and the analysis were found. The break flow rate was slightly overestimated immediately after the break. This was related to the experimental uncertainty in the initial fluid temperature in the break line. The increase in pressurizer water level was underestimated during the depressurization of primary side by opening the pressurizer power operated relief valve (PORV). The primary pressure was overestimated after the closing of the PORV. The secondary side liquid levels were overestimated in both the SGs, as was the case with the SG-SB-06 analysis. In the analysis, the decrease in the upper head fluid temperature was almost the same as that in the former experiment, but larger than that in this experiment. From the SB-SG-06 and SB-SG-07 analyses, several problems were found in the SGTR analysis by using RELAP5/MOD2 as such (1) the criterion for the horizontal stratification, and (2) the interfacial heat transfer model in the vertical stratification model.

M. E. Waterman, C. M. Kullberg, and P. D. Wheatley, *Venting of Noncondensable Gas From the Upper Head of a B &W Reactor Vessel Using Hot Leg U-bend Vent Valves*, NUREG/CR-4488, EGG-2436, March 1986.

This report describes RELAP5/MOD2 thermal-hydraulic analyses of noncondensable gas removal from Babcock & Wilcox reactor systems before and during natural circulation conditions following a severe core damage accident. Hot leg U-bend vent valves were modeled as the principal noncondensable venting pathway. The analyses will assist the U. S. Nuclear Regulatory Commission (NRC) in determining whether three B&W plants should receive permanent exemptions from a reactor vessel upper head vent requirement.

J. C. Watkins, *R5FORCE/MOD3s: A Program to Compute Fluid Induced Forces Using Hydrodynamic Output from the RELAP5/MOD3 Code*, EG&G Idaho, Inc., September 1990.

This report describes an update of a computer program which operates on hydrodynamic force/time histories for input into various structural analysis codes. This version of the program is compatible with RELAP5/MOD3 and the Micro Vax computing environment whereas an earlier version of the program

was compatible with RELAP5/MOD1. The report describes the force calculation theory, showing the development of a general force equation and the solution of this equation within the RELAP5 output structure. To illustrate the calculational method and provide results for discussion, a sample problem is presented. A detailed user manual for the computer program is included as an appendix.

W. L. Weaver, "Plans and Status of RELAP5/MOD3," *RELAP5 Users Seminar, College Station, TX, January 30 - February 3, 1989,* CONF-890173.

RELAP5/MOD3 is a pressurized water reactor (PWR) system analysis code being developed jointly by the U. S. Nuclear Regulatory Commission and a consortium consisting of several of the countries that are members of the International Code Assessment and Applications Program. This code development program is called the ICAP Code Improvement Program. The mission of the RELAP5/MOD3 code improvement program is to develop a code version suitable for the analysis of all transients and postulated accidents in PWR systems including both large- and small-break loss-of-coolant accidents (LOCAs) as well as the full range of operational transients. The emphasis of the RELAP5/MOD3 development will be on large break LOCAs since previous versions of RELAP5 were developed and assessed for small-break LOCAs and operation transient test data. The paper discusses the various code models to be improved and presents the results of work completed to date.

W. L. Weaver, "RELAP5/MOD3 Development Plan and Status," *16th Water Reactor Safety Information Meeting, Gaithersburg, MD, October 1988*.

RELAP5/MOD3 is a pressurized water reactor (PWR) system analysis code being developed jointly by the U. S. Nuclear Regulatory Commission and a consortium consisting of several of the countries that are members of the International Code Assessment Program. The objective of the RELAP5/MOD3 code development program is to develop a code suitable for the analysis of all transients and postulated accidents in PWR systems including both large and small break loss-of-coolant accidents as well as the full range of operational transients.

W. L. Weaver et al., "The RELAP5/MOD3 Code for PWR Safety Analysis," *Fourth Internal Topical Meeting on Nuclear Reactor Thermal Hydraulics, Karlsruhe, West Germany, October 10-13, 1989*.

RELAP5/MOD3 is a pressurized water reactor (PWR) system analysis code being developed jointly by the U. S. Nuclear Regulatory Commission and a consortium consisting of several countries that are members of the International Code Assessment and Applications Program (ICAP). This code development program is called the ICAP Code Improvement Program. The mission of the RELAP5/MOD3 code improvement program is to develop a code version suitable for the analysis of all transients and postulated accidents in PWR systems including both large- and small-break loss-of-coolant accidents (LOCAs) as well as the full range of operational transients. The emphasis of the RELAP5/MOD3 development will be on large break LOCA since previous versions of RELAP5 were developed and assessed for small-break LOCAs and operational transient test data. The paper discusses the various code models to be improved and presents the results of work completed to date.

M. W. Wendel, "Thermal Hydraulic System Simulation of the HFIR with RELAP5/MOD2," *American Nuclear Society Annual Meeting, Nashville, TN, June 10-15, 1990.*

A model of the High Flux Isotope Reactor (HFIR) in Oak Ridge has been developed to simulate loss-of-coolant accidents (LOCAs) and operational transients using the RELAP5/MOD2 program. This work constitutes a portion of the analytical studies being performed to update the HFIR Thermal-Hydraulic Safety Analysis. RELAP5 permits the determination of the survivability of the core through various transients based on the critical heat flux (CHF) criteria rather than the more conservative incipient boiling criteria, which have been used previously. Preliminary simulations for small-diameter breaks have been completed, and results are discussed in this document.

M. W. Wendel, "Accurate Representation of Primary Coolant System Depressurization for High Flux Isotope Reactor Transients," *National Conference and Exposition on Heat Transfer, Atlanta, GA. August 8-11, 1993.*

Because the High Flux Isotope Reactor primary coolant system is typically all liquid, the pressure falls very rapidly if a leak forms in the primary piping. This depressurization is the predominate phenomenon in the consideration of the loss-of-coolant-accident analysis that has been completed recently for the High Flux Isotope Reactor Safety Analysis Report. Small differences in the rate of depressurization can significantly affect the safety margin. A RELAP5 thermal-hydraulic input model has been developed, but the capabilities of the RELAP5 code do not automatically take into account the effect on the system pressure of a stretching or shrinkage in the pressure boundary. Because this change in the pressure boundary is so important in an all-liquid system, a scheme has been developed to account for the effect implementation of the structural elasticity model involved using the control variable capability of RELAP5. During simulated transients involving rapid pressure changes, mass is added to or taken away from the primary system depending on whether the system is decreasing or increasing in pressure. By doing so, a more realistic system response to transients involving significant pressure changes is obtained. The model has been used to perform various HFIR transient simulations including loss-of-coolant accidents (LOCAs), loss of offsite power, and loss-of-secondary-cooling transients. Results for a small break LOCA are presented with and without the elasticity model in place.

M. Wendel and D. G. Morris., "Pump Cavitation of the HFIR Primary Coolant Pumps During Pump Coastdown Initiated by a LOCA," *Winter Meeting of the American Nuclear Society, San Francisco, CA, November 10-15, 1991.*

The objective of this effort was to present the effects of pump cavitation within the context of the RELAP5/MOD2 High Flux Isotope Reactor (HFIR) primary coolant system input model. Using the existing data available for the main circulating pumps, such a scheme was developed. The head degradation associated with pump cavitation was achieved in the model by modulating the pump speed value input to the RELAP5 pump model. The modulated pump speed is less than the noncavitating pump speed, thus producing the required head degradation.

M. W. Wendel and P. T. Williams, "Verification of RELAP5 Capabilities to Simulate Pressure Wave Propagation for Instantaneous Pipe Breaks," *35th Annual Meeting of the American Nuclear Society; New Orleans, LA, June 11-16, 1994.*

The Advanced Verification Neutron Source Reactor (ANSR), currently in conceptual design in the Oak Ridge National Laboratory (ORNL), is to be a very high flux neutron research facility. The ANSR uses plate-type fuel cooled by high-velocity, highly subcooled heavy water. A submerged coolant loop configuration assures long-term inventory after pipe breaks, and passive gas pressurized accumulators are included to slow the rate of system depressurization. During the design of the ANSR, RELAP5 has been used for the thermal-hydraulic analysis of pipe break events. A significant finding in the RELAP5 simulations is that the predicted limiting phenomenon for an instantaneous break in the ANSR piping in the acoustic depressurization was that it propagates from the encounters and various area changes which produce reflections and transmissions of a different amplitude than the original wave, hence the RELAP5 results show a complicated transient behavior of the pressure at the outlet of the fuel channel. If the break is large enough (i.e., if the amplitude of the expansion wave is great enough) the local pressure decrease at this location leads to violation of the flow excursion thermal limit, which is a strong function of coolant subcooling (i.e., saturation pressure).

P. D. Wheatley et al., *RELAP5/MOD2 Code Assessment at the Idaho National Engineering Laboratory*, NUREG/CR-4454, EGG-2428, March 1986.

Independent assessment of the RELAP5 code was continued with the assessment of RELAP5/MOD2 during 1985. RELAP5 was assessed using a range of integral and separate-effects data. Semiscale tests S-UT-8, S-UT-6, and S-PL-4 simulating small-break transients were used for assessment. GERDA 1605AA and Model Boiler-2 were also used. The crossflow junction capability in RELAP5 was assessed using the Electric Power Research Institute's single-phase liquid subchannel blockage test data. International Standard Problem 18 was also reviewed as part of the assessment of RELAP5/MOD2. Results of the independent assessments are documented in this report.

F. J. Winkler, "FRG Assessment of TRAC-PF1/MOD1 and RELAP5/MOD2," *13th Water Reactor Safety Information Meeting, Washington, D.C., October 1985*, NUREG/CP-0072, Volume 5, February, Kraftwerk Union AG, Federal Republic of Germany.

The U. S. Nuclear Regulatory Commission and Bundes Ministerium Für Forschung und Technologie (BMFT) of the Federal Republic of Germany (FRG) have established a bilateral agreement in which Kraftwerk Union (KWU) and Gesellschaft für Reaktorsicherheit (GRS) will perform 50 code assessment calculations in return for receipt of the four advanced computer codes TRAC-PF1, TRAC-BD, TRAC-BF1, and RELAP5/MOD2. This presentation describes the structure of the proposed code assessment studies and the experimental facilities and experiments to be used for these studies. The proposed studies currently include analysis of experiments in FRG experimental facilities and analysis for commissioning transients in modern KWU 1,300-MW pressurized water reactor and boiling water reactor nuclear power plants. The currently proposed studies in experimental facilities use data from the Upper Plenum Test Facility, PKL, and the Karlstein Calibration test facility. Separate effects test data will primarily be used to

assess individual models within the codes while integral test data will be used to assess the entire code. These assessment activities will be the FRG contribution to the International Code Assessment Program.

F. J. Winkler and K. Wolfert, "Experience with Use of RELAP5/MOD2 and TRAC-PF1/MOD1 in the Federal Republic of Germany," *15th Water Reactor Safety Information Meeting, Gaithersburg, MD, October 26, 1987*, Siemens, KWU, Erlangen, Federal Republic of Germany.

The purpose of the Federal Republic of Germany's (FRG's) participation in the International Code Assessment and Applications Program (ICAP), with Siemens Kraftwerk Union (KWU) and Gesellschaft für Reaktorsicherheit (GRS) as executing agents of the Bundes Ministerium für Forschung and Technologie (BMFT), is primarily to establish internationally assessed and approved computer codes for accident analysis of light water reactors. In Siemens KWU RELAP5/MOD2 is used as the main thermal-hydraulic code for loss-of-coolant accident (LOCA) analysis over the entire transient range. Therefore, more emphasis is placed on the updated FRG-ICAP matrix on assessing RELAP5/MOD2 for large break LOCA analysis. In KWU and GRS, TRAC-PF1 is used mainly for multi-dimensional pressurized water reactor-benchmark studies and research, in particular for Upper Plenum Test Facility pretest and posttest analysis. The updated FRG-ICAP matrix includes 42 specific assessment studies, with 8 yet to be defined. In the paper, the types of analysis performed in FRG at KWU and GRS using RELAP5/MOD2 and TRAC-PF1 are explained. Examples of results from RELAP5 and TRAC-PF1 calculations are also presented and significant findings discussed.

A. Woudstra, J. P. A. Van De Bogaard, and P. M. Stoop, *Assessment of RELAP5/MOD2 Against ECN-Reflood Experiments,* Netherlands Energy Research Foundation (ECN), Petten, Netherlands, July 1993.

As part of the ICAP (International Code Assessment and Applications Program) agreement between ECN (Netherlands Energy Research Foundation) and USNRC, ECN has performed a number of assessment calculations with the computer program RELAP5. This report describes the results as obtained by ECN from the assessment of the thermal-hydraulic computer program RELAP5/MOD2/CY 36.05 versus a series of reflood experiments in a bundle geometry. A total number of seven selected experiments have been analyzed, from the reflood experimental program as previously conducted by ECN under contract of the Commission of the European Communities (CEC). In this document, the results of the analyses are presented and a comparison with the experimental data is provided.

H. Xue, T. Tanrikut, and R. Menzel, *The Assessment of RELAP5/MOD2 Based on Pressurizer Transient Experiments,* Inst. fuer Kernenergetik and Energiesysteme, March 1992.

Two typical experiments have been performed in a Chinese test facility under full pressure load corresponding to typical PWRs, (1) the dynamic behavior of the pressurizer due to relief valve operations (Case-1) is extremely important in transients and accident conditions regarding depressurization of PWR primary system, and (2) outsurge/insurge operation is one of the transients which is often encountered and experienced in pressurizer systems due to pressure transients in primary system of PWRs. The simulation capability of RELAP5/MOD2 is good in comparison to experimental results. The physical index (such as interface model, stratification model), playing a major role in such simulation, seems to be realistic. The

effect of realistic valve modeling in depressurization simulation is extremely important. Sufficient data for relief valve (the dynamic characteristics of valve) play a major role. The time-dependent junction model and the trip valve model with a reduced discharge coefficient of 0.2 give better predictions in agreement with the experiment data while the trip valve models with a discharge coefficient 1.0 yield overdepressurization. The simulation of outsurge/insurge transient yields satisfactory results. The thermal nonequilibrium model is important with respect to simulation of complicated physical phenomena in outsurge/insurge transients but has a negligible effect upon the depressurization simulation.

M. S. Yeung, R. T. Fernandez, R. K. Sundaram, and J. Wu, "RELAP5/MOD3 Simulation of the Water Cannon Phenomenon," *Nuclear Technology*, February 1993.

The results of the transient behavior of the water cannon phenomenon determined by RELAP5/MOD3 Version 5m5 are presented. The physical system consists of a 0.7112-m-long, 0.381-m-i-d. vertical tube partially immersed in a reservoir of subcooled water. The tube is closed at the top and initially filled with saturated steam. The water cannon is created when a liquid slug is drawn in to the tube because of the rapid condensation of the steam. In a fraction of a second, the liquid slug strikes the top end of the tube and causes a large pressure spike. The primary objective is to apply the RELAP5/MOD3 computer code to analyze the water cannon event and assess the ability of RELAP5/MOD3 to simulate fast two-phase transients. The sensitivity of time step size and mesh size has been studied. It is found that RELAP5/MOD3 adequately simulated the transient process with a mesh size of 0.07112 m (i.e., ten nodes) and a time step size of 10^{-5} seconds. The calculated peak pressure of the first pressure spike is of the same order of magnitude as experimental data from literature. The effect of reservoir temperature on the magnitude of the first pressure spike is also studied, and it is found that the pressure peak value decreased with increasing reservoir temperature.

V. Yrjola, *Assessment of RELAP5/MOD2, Cycle 36.04, Against the LOVIISA-2 Stuck-Open Turbine By-Pass Valve Transient on September 1, 1981: International Agreement Report,* Valtion Teknillinen Tutkimuskeskus, Helsinki Finland, Nuclear Engineering Lab. March 1992.

This document discusses an overcooling type transient that took place in the LOVIISA Unit 2 and was analyzed using the RELAP5/MOD2 code. The code version was cycle 36.04. The transient that occurred on September 1, 1981 was initiated from full power by a reactor trip. Incorrect operation of the level gauges in four steam generators caused the trip signal. An associated stuck-open failure of one turbine bypass valve caused a fast cooldown. The high pressure safety injection started to operate, but was quickly turned off by the operator. The downcomer temperature decreased from 265°C to 215°C in fifteen minutes. The cooling down ceased when he operator closed the shut-off valve of the open bypass line. Although the plant data are not gathered as comprehensively as those from the extensively instrumented test facilities, the real plant transients are important in order to verify the scaling capability of the current one-dimensional codes to large three-dimensional power plants. The transient data together with the start-up commissioning tests also form a good data base when the applicability of the nodalization model for accident analysis is tested. This work was performed at the Technical Research Centre of Finland (VTT) in

cooperation with the utility Imatran Voima Oy (IVO), which owns and operates these plants. Many people in both organizations have contributed to the work and their support and assistance is acknowledged.

R. Y. Yuann, K. S. Liang, and J. L. Jacobson, *RELAP5/MOD2 Assessment Using Semiscale Experiments S-NH-1 and S-LH-2*, NUREG/CR-5010, EGG-2520, October 1987.

This report presents the results of the RELAP5/MOD2 posttest assessment using two small-break loss-of-coolant accident (LOCA) tests (S-NH-1 and S-LH-2), which were performed in the Semiscale MOD-2C facility. Test S-NH-1 was a 0.5% small-break LOCA where the high-pressure injection system (HPIS) was inoperable throughout the transient. Test S-LH-2 was a 5% small-break LOCA involving a relatively high upper-to-downcomer initial bypass flow and nominal emergency core cooling. Through comparisons between data and best-estimate RELAP5 calculations, the capabilities of RELAP5 to calculate the transient phenomena are assessed. For S-NH-1, emphasis was placed on the capability of the code to calculate various operator actions to initiate core heatup in the absence of the HPIS. For S-LH-2, the capability of the code to calculate basic small break system response (e.g., vessel level during loop seal formation and clearing, break uncovery, and primary pressure response following accumulator injection) was assessed.

Appendix B
Example of Pressurized Water Reactor RELAP5-3D© Input Listing

```
=Example PWR model for RELAP5-3D User's Guidelines
*
* Note:  The following input model is for a hypothetical Westinghouse
*       type pressurized water reactor.  Even though there are many
*       similarities between the Example PWR and some existing
*       reactor systems, the Example PWR should not be taken as a
*       model of any existing system.  The dimensions contained herein
*       although similar to some existing systems, are fictitious.
*
*-----------------------------------------------------------------------
*crdno          problem type       option
0000100              new           transnt
*-----------------------------------------------------------------------
*crdno          inp-chk/run option
0000101                run
*-----------------------------------------------------------------------
*crdno          input units        output units
0000102            british            british
*-----------------------------------------------------------------------
*crdno    time 1     time 2
0000105   20.0        30.0
*-----------------------------------------------------------------------
*crdno    noncond 1     noncond 2    noncond 3    noncond 4    noncond 5
0000110   nitrogen
*-----------------------------------------------------------------------
*crdno end time  min dt   max dt  ssd00    minor ed  major ed  restart
0000201  200.0  1.0e-6    0.05    0003       40      2000       2000
*=*=*=*=*=*=*=*=*=*=*=*=*=*=*=*=*=*=*=*=*=*=*=*=*=*=*=*=*=*=*=*=*=*=*=*=*=*=***
*edit no.     var name       var number
0000301       p              282010000
0000302       p              382010000
0000303       p              482010000
0000304       p              800010000
0000305       p              826010000
0000306       p              854010000
0000307       p              878010000
0000308       p              510010000
0000309       p              610010000
0000310       p              710010000
0000311       p              340010000
0000312       mflowj         278010000
0000313       mflowj         278020000
0000314       mflowj         278030000
0000315       mflowj         378010000
0000316       mflowj         378020000
```

```
0000317    mflowj     378030000
0000318    mflowj     478010000
0000319    mflowj     478020000
0000320    mflowj     478030000
0000321    mflowj     505000000
0000322    mflowj     555000000
0000323    mflowj     605000000
0000324    mflowj     655000000
0000325    mflowj     705000000
0000326    mflowj     755000000
0000327    mflowj     828000000
0000328    mflowj     852000000
0000329    mflowj     863000000
0000330    mflowj     866000000
0000331    mflowj     204010000   $vessel
0000332    mflowj     304010000   $vessel
0000333    mflowj     404010000   $vessel
0000334    tempf      830010000   $lp htr 1
0000335    tempf      830020000   $lp htr 2
0000336    tempf      840010000   $lp htr 3
0000337    tempf      840020000   $lp htr 4
0000338    tempf      840030000   $lp htr 5
0000339    tempf      854010000   $mfw pmp sctn hdr
0000340    tempf      878010000   $hp htr 6
0000341    tempf      112010000   $vessel
0000342    tempf      118010000   $vessel
0000343    tempf      126010000   $vessel
0000344    tempf      204040000   $vessel
0000345    tempf      304040000   $vessel
0000346    tempf      405010000   $vessel
0000347    tempf      550010000   $vessel
0000348    tempf      650010000   $vessel
0000349    tempf      750010000   $vessel
0000350    mflowj     102020000   $vessel
0000351    mflowj     100020000   $vessel
0000352    mflowj     112010000   $vessel
0000353    mflowj     120040000   $vessel
0000354    cntrlvar   101
0000355    cntrlvar   102
0000356    cntrlvar   103
0000357    cntrlvar   121
0000358    cntrlvar   131
0000359    cntrlvar   141
0000360    cntrlvar   60
0000361    cntrlvar   180
0000362    cntrlvar   181
0000363    cntrlvar   182
0000364    cntrlvar   183
0000365    cntrlvar   003
0000367    cntrlvar   005
```

```
0000369      cntrlvar      007
0000371      cntrlvar      506
0000372      cntrlvar      606
0000373      cntrlvar      706
0000374      cntrlvar      570
0000375      cntrlvar      670
0000376      cntrlvar      770
0000377      cntrlvar      771
0000378      cntrlvar      200
0000379      cntrlvar      202
0000380      cntrlvar      203
0000381      cntrlvar      207
0000383      cntrlvar      529
0000384      cntrlvar      629
0000385      cntrlvar      729
0000386      mflowj        804000000
0000387      p             806010000
*
*=*=*=
```

```
*----------------------------------------------------------------------
0000504  cntrlvar  111      ge   null     0         2.0        n
$*=*=*=*=*=*=*=*=*=*=*=*=*=*=*=*=*=*=*=*=*=*=*=*=*=*=*=*=*=*=*=*=*=*=*=*=**
$tavg .le. 554f - 1/2 msiv closure.  page 20
*----------------------------------------------------------------------
0000505  cntrlvar  104      le   null     0         554.0      n
$*=*=*=*=*=*=*=*=*=*=*=*=*=*=*=*=*=*=*=*=*=*=*=*=*=*=*=*=*=*=*=*=*=*=*=*=**
$2/3 reactor over-temp delta t.  page 32a
*----------------------------------------------------------------------
0000507  cntrlvar  180      ge   null     0         2.0        l
$*=*=*=*=*=*=*=*=*=*=*=*=*=*=*=*=*=*=*=*=*=*=*=*=*=*=*=*=*=*=*=*=*=*=*=*=**
$2/3 reactor over-power delta t.  page 32a
*----------------------------------------------------------------------
0000508  cntrlvar  182      ge   null     0         2.0        l
$*=*=*=*=*=*=*=*=*=*=*=*=*=*=*=*=*=*=*=*=*=*=*=*=*=*=*=*=*=*=*=*=*=*=*=*=**
$low rc flow trip.  page 35a
*----------------------------------------------------------------------
0000509  cntrlvar  196      ge   cntrlvar  197       0.0        l
$*=*=*=*=*=*=*=*=*=*=*=*=*=*=*=*=*=*=*=*=*=*=*=*=*=*=*=*=*=*=*=*=*=*=*=*=**
$pzr level .le. 14.4%.  page 52
*----------------------------------------------------------------------
0000510  cntrlvar  202      le   null     0         0.144      l
$*=*=*=*=*=*=*=*=*=*=*=*=*=*=*=*=*=*=*=*=*=*=*=*=*=*=*=*=*=*=*=*=*=*=*=*=**
$pzr level error lt -5%.  page 53
*----------------------------------------------------------------------
0000511  cntrlvar  203      lt   null     0        -0.05       n
$*=*=*=*=*=*=*=*=*=*=*=*=*=*=*=*=*=*=*=*=*=*=*=*=*=*=*=*=*=*=*=*=*=*=*=*=**
$pzr compensated pressure error .le. -25 psi.  page 53
*----------------------------------------------------------------------
0000512  cntrlvar  212      le   null     0        -25.0       n
$*=*=*=*=*=*=*=*=*=*=*=*=*=*=*=*=*=*=*=*=*=*=*=*=*=*=*=*=*=*=*=*=*=*=*=*=**
$pzr compensated pressure error .ge. 30 psi.  page 54
*----------------------------------------------------------------------
0000513  cntrlvar  212      ge   null     0         30.0       n
$*=*=*=*=*=*=*=*=*=*=*=*=*=*=*=*=*=*=*=*=*=*=*=*=*=*=*=*=*=*=*=*=*=*=*=*=**
$pzr compensated pressure error .ge. 100 psi.  page 54
*----------------------------------------------------------------------
0000514  cntrlvar  212      ge   null     0         100.0      n
$*=*=*=*=*=*=*=*=*=*=*=*=*=*=*=*=*=*=*=*=*=*=*=*=*=*=*=*=*=*=*=*=*=*=*=*=**
$pzr pressure .ge. 2265 psia.  page 55
*----------------------------------------------------------------------
0000515  cntrlvar  210      ge   null     0         2280.0     n
$*=*=*=*=*=*=*=*=*=*=*=*=*=*=*=*=*=*=*=*=*=*=*=*=*=*=*=*=*=*=*=*=*=*=*=*=**
$pzr pressure .ge. 2350 psia.  page 55
*----------------------------------------------------------------------
0000516  cntrlvar  210      ge   null     0         2350.0     n
$*=*=*=*=*=*=*=*=*=*=*=*=*=*=*=*=*=*=*=*=*=*=*=*=*=*=*=*=*=*=*=*=*=*=*=*=**
$pzr pressure .ge. 2460 psia.  page 56
*----------------------------------------------------------------------
0000517  cntrlvar  210      ge   null     0         2460.0     n
```

```
$*=*=*=
```

```
*----------------------------------------------------------------------
0000530  cntrlvar  518      le   null     0         628644.73   1
$*=*=*=*=*=*=*=*=*=*=*=*=*=*=*=*=*=*=*=*=*=*=*=*=*=*=*=*=*=*=*=*=*=*=*=*=**
$condensate pump discharge pressure .le. 465 psia.  page 74
*----------------------------------------------------------------------
0000531  p        826010000 le   null     0         465.0      1
$*=*=*=*=*=*=*=*=*=*=*=*=*=*=*=*=*=*=*=*=*=*=*=*=*=*=*=*=*=*=*=*=*=*=*=*=**
$manual mfw pump trip.  page 74
*----------------------------------------------------------------------
0000532  time     0        ge   null     0         1.0e6      1
$*=*=*=*=*=*=*=*=*=*=*=*=*=*=*=*=*=*=*=*=*=*=*=*=*=*=*=*=*=*=*=*=*=*=*=*=**
$plant at hot standby.  page 77
*----------------------------------------------------------------------
0000533  time     0        ge   null     0         1.0e6      1
$*=*=*=*=*=*=*=*=*=*=*=*=*=*=*=*=*=*=*=*=*=*=*=*=*=*=*=*=*=*=*=*=*=*=*=*=**
$electric power to motor driven afw pumps available.  page 78
*----------------------------------------------------------------------
0000534  time     0        ge   null     0         0.0        n
$*=*=*=*=*=*=*=*=*=*=*=*=*=*=*=*=*=*=*=*=*=*=*=*=*=*=*=*=*=*=*=*=*=*=*=*=**
$afw discharge pressure .le. 665 psia.  page 78
*----------------------------------------------------------------------
*v trip  v code 1  param 1   rel  v code 2  param 2     constant  latch
0000535  cntrlvar  730      le   null     0           0.0      1
$*=*=*=*=*=*=*=*=*=*=*=*=*=*=*=*=*=*=*=*=*=*=*=*=*=*=*=*=*=*=*=*=*=*=*=*=**
$sga nr level .le. 15%.  page 79
*----------------------------------------------------------------------
0000536  cntrlvar  506      le   null     0         0.15       n
$*=*=*=*=*=*=*=*=*=*=*=*=*=*=*=*=*=*=*=*=*=*=*=*=*=*=*=*=*=*=*=*=*=*=*=*=**
$sgb nr level .le. 15%.  page 79
*----------------------------------------------------------------------
0000537  cntrlvar  606      le   null     0         0.15       n
$*=*=*=*=*=*=*=*=*=*=*=*=*=*=*=*=*=*=*=*=*=*=*=*=*=*=*=*=*=*=*=*=*=*=*=*=**
$sgc nr level .le. 15%.  page 79
*----------------------------------------------------------------------
0000538  cntrlvar  706      le   null     0         0.15       n
$*=*=*=*=*=*=*=*=*=*=*=*=*=*=*=*=*=*=*=*=*=*=*=*=*=*=*=*=*=*=*=*=*=*=*=*=**
$1/3 sg with low-ow level.  page 80
*----------------------------------------------------------------------
0000539  cntrlvar  734      ge   null     0         1.0        n
$*=*=*=*=*=*=*=*=*=*=*=*=*=*=*=*=*=*=*=*=*=*=*=*=*=*=*=*=*=*=*=*=*=*=*=*=**
$sias with 50 sec delay.  page 80
*----------------------------------------------------------------------
0000540  time     0        ge   timeof   668       50.0       n
$*=*=*=*=*=*=*=*=*=*=*=*=*=*=*=*=*=*=*=*=*=*=*=*=*=*=*=*=*=*=*=*=*=*=*=*=**
$2/3 sg with low-low level.  page 81
*----------------------------------------------------------------------
0000541  cntrlvar  734      ge   null     0         2.0        n
$*=*=*=*=*=*=*=*=*=*=*=*=*=*=*=*=*=*=*=*=*=*=*=*=*=*=*=*=*=*=*=*=*=*=*=*=**
$the following trips determine the pressure response of the steam line
$saftey valves.  the trips are such that the valve hysteresis can be
```

```
$modeled as described in source literature.
*----------------------------------------------------------------------
0000542  cntrlvar  554      gt   null     0        0.0        n
0000543  cntrlvar  551      gt   null     0        1254.0      n
0000544  cntrlvar  654      gt   null     0        0.0        n
0000545  cntrlvar  651      gt   null     0        1254.0      n
0000546  cntrlvar  754      gt   null     0        0.0        n
0000547  cntrlvar  751      gt   null     0        1254.0      n
$*=*=*=
```

```
*----------------------------------------------------------------------
0000561  cntrlvar  902      ge   cntrlvar  900        0.0        n
$*=*=*=*=*=*=*=*=*=*=*=*=*=*=*=*=*=*=*=*=*=*=*=*=*=*=*=*=*=*=*=*=*=*=*=*=**
$sgc steam flowrate .ge. setpoint steam flowrate.  page 113
*----------------------------------------------------------------------
0000562  cntrlvar  903      ge   cntrlvar  900        0.0        n
$*=*=*=*=*=*=*=*=*=*=*=*=*=*=*=*=*=*=*=*=*=*=*=*=*=*=*=*=*=*=*=*=*=*=*=*=**
$2/3 high steam flow.  page 113
*----------------------------------------------------------------------
0000563  cntrlvar  907      ge   null     0          2.0        n
$*=*=*=*=*=*=*=*=*=*=*=*=*=*=*=*=*=*=*=*=*=*=*=*=*=*=*=*=*=*=*=*=*=*=*=*=**
$sga low steam line pressure.  page 114
*----------------------------------------------------------------------
0000564  p        550010000 le   null     0          619.0      n
$*=*=*=*=*=*=*=*=*=*=*=*=*=*=*=*=*=*=*=*=*=*=*=*=*=*=*=*=*=*=*=*=*=*=*=*=**
$sgb low steam line pressure.  page 114
*----------------------------------------------------------------------
0000565  p        650010000 le   null     0          619.0      n
$*=*=*=*=*=*=*=*=*=*=*=*=*=*=*=*=*=*=*=*=*=*=*=*=*=*=*=*=*=*=*=*=*=*=*=*=**
$sgc low steam line pressure.  page 114
*----------------------------------------------------------------------
0000566  p        750010000 le   null     0          619.0      n
$*=*=*=*=*=*=*=*=*=*=*=*=*=*=*=*=*=*=*=*=*=*=*=*=*=*=*=*=*=*=*=*=*=*=*=*=**
$2/3 sg with low steam line pressure.  page 115
*----------------------------------------------------------------------
0000567  cntrlvar  911      ge   null     0          2.0        n
$*=*=*=*=*=*=*=*=*=*=*=*=*=*=*=*=*=*=*=*=*=*=*=*=*=*=*=*=*=*=*=*=*=*=*=*=**
$containment pressure .ge. 20 psig.  page 115
*----------------------------------------------------------------------
0000568  time     0        ge   null     0          1.0e6      l
$*=*=*=*=*=*=*=*=*=*=*=*=*=*=*=*=*=*=*=*=*=*=*=*=*=*=*=*=*=*=*=*=*=*=*=*=**
$sga high steam line differential pressure.  page 116
*----------------------------------------------------------------------
0000569  p        550010000 le   p        800010000  -100.0     n
$*=*=*=*=*=*=*=*=*=*=*=*=*=*=*=*=*=*=*=*=*=*=*=*=*=*=*=*=*=*=*=*=*=*=*=*=**
$sgb high steam line differential pressure.  page 116
*----------------------------------------------------------------------
0000570  p        650010000 le   p        800010000  -100.0     n
$*=*=*=*=*=*=*=*=*=*=*=*=*=*=*=*=*=*=*=*=*=*=*=*=*=*=*=*=*=*=*=*=*=*=*=*=**
$sgc high steam line differential pressure.  page 116
*----------------------------------------------------------------------
0000571  p        750010000 le   p        800010000  -100.0     n
$*=*=*=*=*=*=*=*=*=*=*=*=*=*=*=*=*=*=*=*=*=*=*=*=*=*=*=*=*=*=*=*=*=*=*=*=**
$sias high containment pressure (4 psig).  page 117
*----------------------------------------------------------------------
0000572  time     0        ge   null     0          1.0e6      l
$*=*=*=*=*=*=*=*=*=*=*=*=*=*=*=*=*=*=*=*=*=*=*=*=*=*=*=*=*=*=*=*=*=*=*=*=**
$turbine stop/governor valve area .le. 0.0.  page 120
*----------------------------------------------------------------------
0000573  cntrlvar  924      le   null     0          0.0        l
```

```
$*=*=*=
```

```
*-----------------------------------------------------------------------
0000586  time      0        ge   null      0          1.0e6      l
$*=*=*=*=*=*=*=*=*=*=*=*=*=*=*=*=*=*=*=*=*=*=*=*=*=*=*=*=*=*=*=*=*=*=*=**
$see if mass flow through mfw reg valve a is below 55.55 lbm/s
*-----------------------------------------------------------------------
0000587  mflowj   505000000  le   null      0         55.55       n
$*=*=*=*=*=*=*=*=*=*=*=*=*=*=*=*=*=*=*=*=*=*=*=*=*=*=*=*=*=*=*=*=*=*=*=**
$see if mass flow through mfw reg valve b is below 55.55 lbm/s
*-----------------------------------------------------------------------
0000588  mflowj   605000000  le   null      0         55.55       n
$*=*=*=*=*=*=*=*=*=*=*=*=*=*=*=*=*=*=*=*=*=*=*=*=*=*=*=*=*=*=*=*=*=*=*=**
$see if mass flow through mfw reg valve c is below 55.55 lbm/s
*-----------------------------------------------------------------------
0000589  mflowj   705000000  le   null      0         55.55       n
$*=*=*=*=*=*=*=*=*=*=*=*=*=*=*=*=*=*=*=*=*=*=*=*=*=*=*=*=*=*=*=*=*=*=*=***
$l.p. heater bypass                                          *
$-----------------------------------------------------------------------
0000591  p         854010000 le   null      0        414.7        n
0000592  p         854010000 le   null      0        314.7        n
$*=*=*=*=*=*=*=*=*=*=*=*=*=*=*=*=*=*=*=*=*=*=*=*=*=*=*=*=*=*=*=*=*=*=*=***
$main feedwater pump recirculation valve trips; corresponds to 1410gpm $
*-----------------------------------------------------------------------*
0000593  velfj     861010000 lt   null      0        3.429        n
0000594  velfj     861010000 lt   null      0        1.595        n
0000595  velfj     864010000 lt   null      0        3.429        n
0000596  velfj     864010000 lt   null      0        1.595        n
*
*
$*=*=*=*=*=*=*=*=*=*=*=*=*=*=*=*=*=*=*=*=*=*=*=*=*=*=*=*=*=*=*=*=*=*=*=***
$logic trips                                                 $
$                                                        $
*-----------------------------------------------------------------------*
* remove logic trip 600 so problem will run on vax3100
*
*l trip  trip no. 1          trip no. 2
*0000600     501                 502
*
$*=*=*=*=*=*=*=*=*=*=*=*=*=*=*=*=*=*=*=*=*=*=*=*=*=*=*=*=*=*=*=*=*=*=*=**
*l trip  trip no. 1  rel   trip no. 2    latch    comments
0000607     591      and      608          n     $comments
0000608     592      or       607          n     $bp vlv
0000609     608      and     -630          n     $vlv/pmp
0000610    -523      and     -523          n     $rcp on
0000611     511      or       512          n     $page 53
0000612     611      and     -510          n     $on-off htr permissive
0000613     513      and      614          n     $porv #1 stay open
0000614     514      or       613          n     $porv #1 open. pg 54
0000615     515      and      616          n     $porv #2 stay open.
0000616     516      or       615          n     $porv #2 open. p55
0000617     517      and      618          n     $pzr sf stay open.
```

```
0000618   518   or   617   n   $pzr sf open. p 56
0000619   524   or   525   n   $sga or b hi lvl. p 70
0000620   619   or   526   n   $or sgc hi lvl. p 70
0000621   696   and  505   l   $rx and t<554. p 71
0000622   620   or   668   l   $1/3 hi lvl or si.
0000623   621   or   622   l   $fw vlv cls w/o pmp tr
0000624   622   or   529   l   $1/3 hi lvl / lo sctn p
0000625   530   or   531   l   $lo hw/vl or lo dschg p
0000626   624   or   625   l   $
0000627   626   or   532   l   $manual mfw pump trip
0000628   627   or   527   l   $mfwp1 lo flo/mfwp1 trp
0000629   627   or   528   l   $mfwp2 lo flo/mfwp2 trp
0000630   628   and  629   l   $both mfwps tripped
0000631   630   or   623   l   $mfw valves close
0000632   534   and  -535  n   $
0000633   539   or   540   n   $
0000634   633   or   630   n   $
0000635   634   and  632   n   $
0000636   -534  or   541   n   $
0000637   636   and  -535  l   $
0000642   542   or   543   n   $a safety
0000643   544   or   545   n   $b safety
0000644   546   or   547   n   $c safety
0000650   550   and  651   n   $bank 1 stay open. p86
0000651   650   or   551   n   $bank 1 air. p 86
0000652   552   and  653   n   $bank 2 stay open. p86
0000653   652   or   553   n   $bank 2 air. p 86
0000654   554   and  655   n   $bank 3 stay open.
0000655   654   or   555   n   $bank 3 air. p 86
0000656   556   and  557   l   $trip lrc to spc. p 92
0000657   656   or   533   l   $hsb/spc on. p 92
0000658   -657  and  -696  n   $rx trip/lrc off. p 92
0000659   -657  and  696   n   $spc off&rx trip/pt on
0000660   504   or   567   n   $2/3 lo t or pr. p 115
0000661   660   and  563   l   $2/3 hi stm flo/msiv
0000662   661   or   568   l   $hi c p/msiv trip.
0000663   -662  and  -662  n   $msivs stay open-p 115
0000664   569   or   570   n   $a/b hi dp. p 117
0000665   664   or   571   l   $or c. p 117
0000666   522   or   665   n   $lo pzr p/hi dp. p 117
0000667   666   or   572   n   $or hi cv pr. p 117
0000668   667   or   661   l   $or msiv w/ocv- sias
0000669   -523  and  -523  n   $rcps on. p 118
0000670   -558  or   573   n   $cndnsr trp/ttrp. p120
0000671   670   or   696   n   $or rx trip. p 120
0000672   671   or   533   n   $or hsb. p 120
0000673   672   or   620   n   $or hi sg lvl. p 121
0000674   673   or   574   l   $man trp/ttrip. p 121
0000675   575   or   576   n   $trbn dt trips. p 121
0000676   675   and  577   n   $rbk & sp=1. p 122
```

```
0000677    675    and    579      n    $rbk after 30 sec.
0000678    676    or     677      n    $
0000679    678    and    -674     n    $t vlv runback. p 122
0000680    580    and    583      l    $sga lvl/flo trp.
0000681    581    and    584      l    $sgb lvl/flo trip
0000682    582    and    585      l    $sgc lvl/flo trp
0000683    680    or     681      l    $a or b lvl/flow
0000684    683    or     682      l    $or sgc lvl/flow
0000685    503    or     586      l    $hi pwr/man trip
0000686    507    or     508      l    $over-t or p dt
0000687    685    or     686      l    $
0000688    687    or     509      l    $low rc flow
0000689    688    or     519      l    $hi pzr lvl
0000690    689    or     520      l    $hi pzr press
0000691    690    or     521      l    $lo pzr press
0000692    691    or     523      l    $rcp trip
0000693    692    or     539      l    $lo sg lvl. p 129
0000694    693    or     668      l    $sias
0000695    694    or     674      l    $turbine trip
0000696    695    or     684      l    $sg lvl/flow mismatch
0000698   -592    and    -630     n    $heater drain pump trip
0000699   -674    or     -674     n    $heater stm supply trip
*=*=*=
```

```
*
*
*v trip  v code 1  param 1   rel  v code 2  param 2     constant  latch
0000507  cntrlvar  180      ge   null     0         4.0        l
0000508  cntrlvar  182      ge   null     0         4.0        l
0000510  cntrlvar  202      le   null     0        -0.144      l
0000563  cntrlvar  907      ge   null     0         4.0        l
0000576  cntrlvar  183      ge   null     0         4.0        n
0000578  time      0        le   null     0         0.0        n
0000541  cntrlvar  734      ge   null     0         4.0        l
0000575  cntrlvar  181      ge   null     0         4.0        n
0000577  cntrlvar  920      ge   null     0        12.0        n
$*=*=*=*=*=*=*=*=*=*=*=*=*=*=*=*=*=*=*=*=*=*=*=*=*=*=*=*=*=*=*=*=*=*=*=*=*=*=*=*=*=*=***
*l trip  trip no. 1  rel   trip no. 2    latch    comments
0000635     574      and      574          n     $
0000637     574      and      574          n     $
0000668     574      or       574          n     $
0000674     574      or       574          n     $
0000609     574      and      574          n     $
0000630     574      and      574          l     $
0000631     574      and      574          l     $
0000679     574      and      574          n     $
0000627     574      and      574          n     $
0000628     574      and      574          n     $
0000629     574      and      574          n     $
0000696     574      and      574          n     $
$*=*=*=*=*=*=*=*=*=*=*=*=*=*=*=*=*=*=*=*=*=*=*=*=*=*=*=*=*=*=*=*=*=*=*=*=*=*=*=*=*=*=***
*
*
*=*=*=*=*=*=*=*=*=*=*=*=*=*=*=*=*=*=*=*=*=*=*=*=*=*=*=*=*=*=*=*=*=*=*=*=*=*=*=*=*=*=*=
*            hydrodynamic components                                  *
*=*=*=*=*=*=*=*=*=*=*=*=*=*=*=*=*=*=*=*=*=*=*=*=*=*=*=*=*=*=*=*=*=*=*=*=*=*=*=*=*=*=*=
*
*
*=*=*=*=*=*=*=*=*=*=*=*=*=*=*=*=*=*=*=*=*=*=*=*=*=*=*=*=*=*=*=*=*=*=*=*=*=*=*=*=*=*=*
*                    vessel                                  *
*=*=*=*=*=*=*=*=*=*=*=*=*=*=*=*=*=*=*=*=*=*=*=*=*=*=*=*=*=*=*=*=*=*=*=*=*=*=*=*=*=*=*
*
*  vessel inlet annulus                                      *
*-----------------------------------------------------------------
*crdno            component name      component type
1000000              inannup             annulus
*
*crdno            number of volumes
1000001                  3
*
*crdno        vol area                                  vol.no.
1000101         0.0                                       3
*
*crdno        length                                    vol.no.
```

```
1000301      1.6110                          1
1000302      1.8240                          2
1000303      3.4350                          3
*
*crdno       volume                        vol.no.
1000401      37.306                          1
1000402      52.613                          2
1000403      60.493                          3
*
*crdno       vert angle                    vol.no.
1000601        90.0                          3
*
*crdno       elev change                     vol.no.
1000701        1.6110                        1
1000702        1.8240                        2
1000703        3.4350                        3
*
*crdno       roughness      hyd. diameter          vol.no.
1000801        0.00015        1.408                1
1000802        0.00015        1.500                2
1000803        0.00015        0.922                3
*
*crdno       f loss         r loss                jun.no.
1000901        0.0            0.0                   2
*
*crdno       fe                                 vol.no.
1001001        00                                 3
*
*crdno       cahs                               jun.no.
1001101        0000                               2
*
*crdno     vol ic  pressure          eq temp          vol.no.
1001201   0        2297.4000 534.19000 1048.9000 .00000000 0.0       01
1001202   0        2296.8000 534.95000 1049.0000 .00000000 0.0       02
1001203   0        2295.9000 536.34000 1049.0000 .00000000 0.0       03
*
*crdno       vel/flw
1001300   0
*
*crdno       f flowrate     g flowrate     j flowrate     jun.no.
1001301   .04702690 .04702690 0.0       01
1001302   .06188220 .06188220 0.0       02
*         junc dia   beta     c     m
1001401   0.922      0.       1.    1.    2
*
*=*=*=
```

```
*crdno          component name      component type
1020000              inann              branch
*
*crdno                    number of junctions          vel/flw
1020001   6        0
*
*crdno   flow area          length             volume
1020101     0.0             1.6110            37.306
*
*crdno   horz orient        vert orient        delta z
1020102      0.0              -90.0           -1.6110
*
*crdno   roughness          hyd. diameter      fe
1020103   0.00015              1.408           00
*
*crdno     vol ic  pressure           eq temp
1020200   0        2294.6000 533.58000 1049.1000 .00000000
*
*crdno    from          to           area   f loss    r loss    cahs
1021101   102000000     100000000   0.0      0.0       0.0      0000
1022101   102010000     104000000   0.0      0.0       0.0      0000
1023101   102000000     120010000   0.0    1.37e5   1.37e5      0000
1024101   220010000     102000000   0.0     0.0       0.0       0100
1025101   320010000     102000000   0.0     0.0       0.0       0100
1026101   420010000     102000000   0.0     0.0       0.0       0100
*
*crdno                f flowrate     g flowrate     j flowrate
1021201   .04700050 .04700050 0.0
1022201   25.457000 25.457000 0.0
1023201   .20307000 .20307000 0.0
1024201   40.971000 40.971000 0.0
1025201   40.971000 40.971000 0.0
1026201   40.968000 40.968000 0.0
*         junc dia   beta     c     m
1021110   1.408      0.       1.    1.
1022110   0.959      0.       1.    1.
1023110   1.289      0.       1.    1.
1024110   1.289      0.       1.    1.
1025110   1.289      0.       1.    1.
1026110   1.289      0.       1.    1.
*
*=*=*=*=*=*=*=*=*=*=*=*=*=*=*=*=*=*=*=*=*=*=*=*=*=*=*=*=*=*=*=*=*=*=*=*=*=*=*=*=*
*  the following data represent the vessel inlet annulus fluid  *
*  volume below the cold leg centerline (lower volume)          *
*=*=*=*=*=*=*=*=*=*=*=*=*=*=*=*=*=*=*=*=*=*=*=*=*=*=*=*=*=*=*=*=*=*=*=*=*=*=*=*=*
*
*crdno          component name      component type
1040000              inannlo            branch
*
*crdno                    number of junctions          vel/flw
```

```
1040001   2         0
*
*crdno   flow area          length              volume
1040101     0.0             2.4410              57.576
*
*crdno   horz orient        vert orient         delta z
1040102     0.0             -90.0               -2.4410
*
*crdno   roughness          hyd. diameter       fe
1040103   0.00015             0.959             00
*
*crdno     vol ic  pressure            eq temp
1040200   0         2297.4000 533.59000 1048.9000 .00000000
*
*crdno    from          to           area   f loss    r loss    cahs
1041101   104010000     106000000    0.0     0.0       0.0      0000
1042101   104010000     116000000    0.0     21144.   3169.     0000
*
*crdno                  f flowrate     g flowrate     j flowrate
1041201   29.932000 29.932000 0.0
1042201   .20732000 .20732000 0.0
*         junc dia   beta     c     m
1041110   0.957      0.       1.    1.
1042110   0.790      0.       1.    1.
*
*=*=*=*=*=*=*=*=*=*=*=*=*=*=*=*=*=*=*=*=*=*=*=*=*=*=*=*=*=*=*=*=*=*=*=*=*=*=*
*  the following data represent the downcomer fluid volume  *
*=*=*=*=*=*=*=*=*=*=*=*=*=*=*=*=*=*=*=*=*=*=*=*=*=*=*=*=*=*=*=*=*=*=*=*=*=*=*
*
*crdno            component name      component type
1060000               downcom            annulus
*
*crdno            number of volumes
1060001                   7
*
*crdno       vol area                              vol.no.
1060101        0.0                                   7
*
*crdno       length                                vol.no.
1060301       2.111                                   6
1060302       4.094                                   7
*
*crdno       volume                                 vol.no.
1060401      41.350                                   6
1060402      102.90                                   7
*
*crdno       vert angle                             vol.no.
1060601        -90.0                                  7
*
*crdno       elev change                             vol.no.
```

```
1060701        -2.1110                          6
1060702        -4.094                          7
*
*crdno       roughness      hyd. diameter              vol.no.
1060801       0.00015         0.512                    6
1060802       0.00015         0.0                     7
*
*crdno       f loss         r loss                    jun.no.
1060901       0.0            0.0                       6
*
*crdno       fe                                      vol.no.
1061001       00                                       7
*
*crdno       cahs                                     jun.no.
1061101       0000                                     6
*
*crdno     vol ic  pressure          eq temp           vol.no.
1061201   0        2295.8000 533.59000 1049.1000 .00000000 0.0       01
1061202   0        2296.3000 533.59000 1049.0000 .00000000 0.0       02
1061203   0        2296.7000 533.59000 1049.0000 .00000000 0.0       03
1061204   0        2297.1000 533.59000 1049.0000 .00000000 0.0       04
1061205   0        2297.5000 533.59000 1048.9000 .00000000 0.0       05
1061206   0        2297.9000 533.59000 1048.9000 .00000000 0.0       06
1061207   0        2301.0000 533.59000 1048.7000 .00000000 0.0       07
*
*crdno       vel/flw
1061300   0
*
*crdno       f flowrate     g flowrate     j flowrate     jun.no.
1061301   29.932000 29.932000 0.0       01
1061302   29.932000 29.932000 0.0       02
1061303   29.932000 29.932000 0.0       03
1061304   29.932000 29.932000 0.0       04
1061305   29.932000 29.932000 0.0       05
1061306   29.932000 29.932000 0.0       06
*        junc dia   beta     c     m
1061401   0.512      0.       1.    1.   6
*
*=*=*=*=*=*=*=*=*=*=*=*=*=*=*=*=*=*=*=*=*=*=*=*=*=*=*=*=*=*=*=*=*=*=*=*=*=*=*=*=*=*=
*  the following data represent the lower plenum fluid volume  *
*  (upper volume)                                              *
*=*=*=*=*=*=*=*=*=*=*=*=*=*=*=*=*=*=*=*=*=*=*=*=*=*=*=*=*=*=*=*=*=*=*=*=*=*=*=*=*=*=
*
*crdno            component name      component type
1100000              lowplup             branch
*
*crdno                     number of junctions          vel/flw
1100001   2        0
*
*crdno   flow area          length             volume
```

```
1100101     0.0             5.736             484.86
*
*crdno   horz orient        vert orient        delta z
1100102      0.0               90.0            5.736
*
*crdno   roughness          hyd. diameter      fe
1100103   0.00015              0.0             00
*
*crdno     vol ic  pressure            eq temp
1100200   0         2292.0000 533.59000 1049.3000 .00000000
*
*crdno    from          to           area   f loss    r loss    cahs
1101101   106010000     110010000    0.0    4.70      4.70      0000
1102101   110010000     112000000    0.0    3.94      3.94      0000
*
*crdno                  f flowrate     g flowrate     j flowrate
1101201   23.326000 23.326000 0.0
1102201   10.180000 10.180000 0.0
*         junc dia   beta     c     m
1101110   5.657      0.       1.    1.
1102110   0.6835     0.       1.    1. *Hyd. Diam. of lower supp. pl.
*
*=*=*=*=*=*=*=*=*=*=*=*=*=*=*=*=*=*=*=*=*=*=*=*=*=*=*=*=*=*=*=*=*=*=*=*=**
*  the following data represent the core inlet fluid volume  *
*=*=*=*=*=*=*=*=*=*=*=*=*=*=*=*=*=*=*=*=*=*=*=*=*=*=*=*=*=*=*=*=*=*=*=*=**
*
*crdno             component name      component type
1120000               coreinl              branch
*
*crdno                      number of junctions           vel/flw
1120001   2         0
*
*crdno   flow area           length             volume
1120101     0.0             4.094            235.80
*
*crdno   horz orient        vert orient        delta z
1120102      0.0               90.0            4.094
*
*crdno   roughness          hyd. diameter      fe
1120103   0.00015              0.0             00
*
*crdno     vol ic  pressure            eq temp
1120200   0         2287.7000 533.60000 1049.6000 .00000000
*
*crdno    from          to           area   f loss    r loss    cahs
1121101   112010000     114000000   0.0      2.1       2.1     0000
1122101   116010000     112010000   5.291    1.5       1.5     0000
*
*crdno                  f flowrate     g flowrate     j flowrate
1121201   14.148000 14.148000 0.0
```

```
1122201   .60610000 .60610000 0.0
*         junc dia   beta     c     m
1121110   0.037      0.       1.    1.
1122110   0.790      0.       1.    1.
*
*=*=*=*=*=*=*=*=*=*=*=*=*=*=*=*=*=*=*=*=*=*=*=*=*=*=*=*=*=*=*=*=*=*=*=*=
*  the following data represent the core fluid volume  *
*=*=*=*=*=*=*=*=*=*=*=*=*=*=*=*=*=*=*=*=*=*=*=*=*=*=*=*=*=*=*=*=*=*=*=*=
*
*crdno            component name      component type
1140000                core                pipe
*
*crdno            number of volumes
1140001                  6
*
*crdno       vol area                              vol.no.
1140101        41.670                                 6
*
*crdno       jun. area                             jun. no.
1140201        40.174                                 5
*
*crdno       length                                vol.no.
1140301        2.1110                                 6
*
*crdno       volume                                 vol.no.
1140401        0.0                                   6
*
*crdno       vert angle                             vol.no.
1140601          90.0                                 6
*
*crdno       elev change                            vol.no.
1140701        2.1110                                 6
*
*crdno       roughness      hyd. diameter                 vol.no.
1140801        0.00015          0.037                       6
*
*crdno       f loss         r loss                     jun.no.
1140901        0.59             0.59                       5
*
*crdno       fe                                     vol.no.
1141001       100                                       6
*
*crdno      fvcahs                                  jun.no.
1141101     000000                                       5
*
*crdno     vol ic  pressure            eq temp            vol.no.
1141201   0         2283.3000 546.50000 1049.9000 .00000000 0.0       01
1141202   0         2280.3000 560.79000 1050.1000 .00000000 0.0       02
1141203   0         2277.2000 574.84000 1050.3000 .00000000 0.0       03
1141204   0         2274.1000 588.79000 1050.6000 .00000000 0.0       04
```

```
1141205   0        2271.0000 602.50000 1050.8000 .00000000 0.0       05
1141206   0        2267.9000 611.25000 1051.0000 .00000000 0.0       06
*
*crdno       vel/flw
1141300   0
*
*crdno       f flowrate     g flowrate     j flowrate     jun.no.
1141301   14.888000 14.888000 0.0       01
1141302   15.142000 15.142000 0.0       02
1141303   15.406000 15.406000 0.0       03
1141304   15.689000 15.689000 0.0       04
1141305   15.989000 15.989000 0.0       05
*        junc dia   beta     c     m
1141401   0.019      0.       1.    1.   5  *Hyd. Diam. at grid spacer
*
*=*=*=*=*=*=*=*=*=*=*=*=*=*=*=*=*=*=*=*=*=*=*=*=*=*=*=*=*=*=*=*=*=*=*=*=***
*  the following data represent the core bypass fluid volume  *
*=*=*=*=*=*=*=*=*=*=*=*=*=*=*=*=*=*=*=*=*=*=*=*=*=*=*=*=*=*=*=*=*=*=*=*=***
*
*crdno            component name      component type
1160000                bypass               annulus
*
*crdno            number of volumes
1160001                   6
*
*crdno       vol area                                vol.no.
1160101        15.435                                   6
*
*crdno       length                                  vol.no.
1160301      2.1110                                     6
*
*crdno       volume                                   vol.no.
1160401      0.00                                       6
*
*crdno       vert angle                               vol.no.
1160601        -90.0                                    6
*
*crdno       elev change                              vol.no.
1160701       -2.1110                                     6
*
*crdno       roughness      hyd. diameter                 vol.no.
1160801       0.00015          .790                        6
*
*crdno       f loss         r loss                      jun.no.
1160901       9640.          9640.                          5
*
*crdno       fe                                       vol.no.
1161001      00                                          6
*
*crdno       cahs                                     jun.no.
```

```
1161101      0000                                  5
*
*crdno     vol ic  pressure           eq temp            vol.no.
1161201   0        2296.0000 534.17000 1049.0000 .00000000 0.0       01
1161202   0        2294.3000 534.68000 1049.2000 .00000000 0.0       02
1161203   0        2292.5000 535.08000 1049.3000 .00000000 0.0       03
1161204   0        2290.8000 535.36000 1049.4000 .00000000 0.0       04
1161205   0        2289.0000 535.53000 1049.5000 .00000000 0.0       05
1161206   0        2287.2000 535.59000 1049.7000 .00000000 0.0       06
*
*crdno       vel/flw
1161300   0
*
*crdno       f flowrate     g flowrate     j flowrate     jun.no.
1161301   .20745000 .20745000 0.0       01
1161302   .20756000 .20756000 0.0       02
1161303   .20765000 .20765000 0.0       03
1161304   .20772000 .20772000 0.0       04
1161305   .20776000 .20776000 0.0       05
*         junc dia   beta     c     m
1161401   0.790      0.       1.    1.   5
*
*=*=*=*=*=*=*=*=*=*=*=*=*=*=*=*=*=*=*=*=*=*=*=*=*=*=*=*=*=*=*=*=*=*=*=*=*=*=*=*=
*  the following data represent the upper plenum fluid volume  *
*  below the hot leg centerline (lower volume)                 *
*=*=*=*=*=*=*=*=*=*=*=*=*=*=*=*=*=*=*=*=*=*=*=*=*=*=*=*=*=*=*=*=*=*=*=*=*=*=*=*=
*
*crdno             component name      component type
1180000               uppllo1              branch
*
*crdno                     number of junctions           vel/flw
1180001   1         0
*
*crdno   flow area           length              volume
1180101     0.0              2.441              225.121
*
*crdno   horz orient         vert orient         delta z
1180102      0.0               90.0             2.4410
*
*crdno   roughness           hyd. diameter       fe
1180103   0.00015               1.289            00
*
*crdno     vol ic  pressure           eq temp
1180200   0        2266.1000 611.25000 1051.1000 .00000000
*
*crdno    from          to           area   f loss    r loss    cahs
*
1181101   114010000     118000000   0.0     1.05       1.05     0000
*
*crdno                 f flowrate     g flowrate     j flowrate
```

```
*
1181201   15.612000 15.612000 0.0
*         junc dia   beta     c     m
1181110   0.037      0.       1.    1.
*
*=*=*=*=*=*=*=*=*=*=*=*=*=*=*=*=*=*=*=*=*=*=*=*=*=*=*=*=*=*=*=*=*=*=*=*=*=
*  the following data represent the upper plenum fluid volume  *
*  below the hot leg centerline (upper volume)                 *
*=*=*=*=*=*=*=*=*=*=*=*=*=*=*=*=*=*=*=*=*=*=*=*=*=*=*=*=*=*=*=*=*=*=*=*=*=
*
*crdno            component name      component type
1200000              uppllo2             branch
*
*crdno                     number of junctions          vel/flw
1200001   5         0
*
*crdno   flow area          length             volume
1200101     0.0             1.6110             128.075
*
*crdno   horz orient        vert orient        delta z
1200102      0.0              90.0             1.6110
*
*crdno   roughness          hyd. diameter      fe
1200103   0.00015              1.289           00
*
*crdno     vol ic  pressure            eq temp
1200200   0         2264.2000 610.50000 1051.3000 .00000000
*
*crdno    from          to           area   f loss    r loss    cahs
1201101   120010000     204000000   4.577   0.0400    1.0000    0100
1202101   120010000     304000000   4.577   0.0400    1.0000    0100
1203101   120010000     404000000   4.577   0.0400    1.0000    0100
1204101   122010000     120010000     0.0    0.0       0.0      0000
1205101   118010000     120000000     0.0    4.1       4.1      0000
*
*crdno                 f flowrate     g flowrate     j flowrate
1201201   47.436000 47.436000 0.0
1202201   47.451000 47.451000 0.0
1203201   47.429000 47.429000 0.0
1204201   .10648000 .10648000 0.0
1205201   8.0900000 8.0900000 0.0
*
*         junc dia   beta     c     m
1201110   1.211      0.       1.    1.
1202110   1.211      0.       1.    1.
1203110   1.211      0.       1.    1.
1204110   1.289      0.       1.    1.
1205110   1.289      0.       1.    1.
*=*=*=*=*=*=*=*=*=*=*=*=*=*=*=*=*=*=*=*=*=*=*=*=*=*=*=*=*=*=*=*=*=*=*=*=*=
*  the following data represent the upper plenum fluid volume  *
```

```
*  above the hot leg centerline                          *
*=*=*=*=*=*=*=*=*=*=*=*=*=*=*=*=*=*=*=*=*=*=*=*=*=*=*=*=*=*=*=*=*=*=*=*=*=*=*=*=
*
*crdno          component name      component type
1220000              upplup              pipe
*
*crdno          number of volumes
1220001                 3
*
*crdno      vol area                            vol.no.
1220101       0.0                                 3
*
*crdno      length                              vol.no.
1220301      3.435                                1
1220302      1.824                                2
1220303      1.611                                3
*
*crdno      volume                              vol.no.
1220401     323.846                               1
1220402     171.964                               2
1220403     128.075                               3
*
*crdno      vert angle                          vol.no.
1220601       -90.0                               3
*
*crdno      elev change                         vol.no.
1220701       -3.435                              1
1220702       -1.824                              2
1220703       -1.611                              3
*
*crdno      roughness      hyd. diameter                vol.no.
1220801       0.00015         1.289                      3
*
*crdno      f loss         r loss                     jun.no.
1220901       0.0            0.0                         2
*
*crdno      fe                                    vol.no.
1221001      00                                      3
*
*crdno     fvcahs                                 jun.no.
1221101    000100                                     2
*
*crdno    vol ic  pressure          eq temp          vol.no.
1221201   0        2262.7000 600.62000 1051.4000 .00000000 0.0       01
1221202   0        2263.5000 600.50000 1051.3000 .00000000 0.0       02
1221203   0        2264.0000 600.41000 1051.3000 .00000000 0.0       03
*
*crdno      vel/flw
1221300   0
*
```

```
*crdno       f flowrate     g flowrate     j flowrate     jun.no.
1221301   .08982550 .08982550 0.0       01
1221302   .10650000 .10650000 0.0       02
*        junc dia   beta     c     m
1221401   1.289      0.       1.    1.   2
*
*=*=*=*=*=*=*=*=*=*=*=*=*=*=*=*=*=*=*=*=*=*=*=*=*=*=*=*=*=*=*=*=*=*=*=**
*  the following data represent the upper head fluid volume  *
*  (lower volume)                                            *
*=*=*=*=*=*=*=*=*=*=*=*=*=*=*=*=*=*=*=*=*=*=*=*=*=*=*=*=*=*=*=*=*=*=*=**
*
*crdno            component name      component type
1260000               uphead2              branch
*
*crdno                     number of junctions           vel/flw
1260001   2         0
*
*crdno   flow area           length              volume
1260101     0.0              6.72150            513.640
*
*crdno   horz orient         vert orient         delta z
1260102      0.0              -90.0            -6.72150
*
*crdno   roughness           hyd. diameter       fe
1260103   0.00015               0.0              00
*
*crdno     vol ic  pressure            eq temp
1260200   0         2261.6000 600.82000 1051.4000 .00000000
*
*crdno    from          to           area   f loss    r loss    cahs
1261101   100010000     126010000   0.0      1.1000e6   1.1000e6  0000
1262101   126010000     122000000   0.0      6.310e3    6.310e3   0000
*
*crdno                 f flowrate     g flowrate     j flowrate
1261201   .06196980 .06196980 0.0
1262201   .11087000 .11087000 0.0
*        junc dia   beta     c     m
1261110   0.922      0.       1.    1.
1262110   1.289      0.       1.    1.
*
*rccfp
*=*=*=*=*=*=*=*=*=*=*=*=*=*=*=*=*=*=*=*=*=*=*=*=*=*=*=*=*=*=*=*=*=*=*=**
*  the following data connection between the uh and core     *
*  and represents the rcc flow path                          *
*=*=*=*=*=*=*=*=*=*=*=*=*=*=*=*=*=*=*=*=*=*=*=*=*=*=*=*=*=*=*=*=*=*=*=**
*
*crdno            component name      component type
1290000               rccfp                branch
*
*crdno                     number of junctions           vel/flw
```

```
1290001   2         0
*
*crdno   flow area          length              volume
1290101     0.0            10.922              10.9220
*
*crdno   horz orient        vert orient         delta z
1290102     0.0             90.0              10.922
*
*crdno   roughness          hyd. diameter       fe
1290103   0.00015             0.0              00
*
*crdno     vol ic  pressure            eq temp
1290200   0         2264.4000 611.25000 1051.2000 .00000000
*
*crdno    from          to           area   f loss    r loss    cahs
1291101   129010000     126010000     0.0    1.5650    1.5650   0000
1292101   118000000     129000000     0.0    1.5650    1.5650   0000
*
*crdno                  f flowrate     g flowrate     j flowrate
1291201   7.4024000 7.4024000 0.0
1292201   7.4023000 7.4023000 0.0
*         junc dia   beta     c     m
1291110   1.128      0.       1.    1.
1292110   1.128      0.       1.    1.
$*=*=*=*=*=*=*=*=*=*=*=*=*=*=*=*=*=*=*=*=*=*=*=*=*=*=*=*=*=*=*=*=*=*=*=*=*=*=*=*=*=***
$loop a - includes the hot leg, steam generator inlet plenum, u-tubes, $
$steam generator outlet plenum, pump suction leg, rc pump,and cold leg $
$*=*=*=*=*=*=*=*=*=*=*=*=*=*=*=*=*=*=*=*=*=*=*=*=*=*=*=*=*=*=*=*=*=*=*=*=*=*=*=*=*=**$
$loop a hot leg                                                    $
*-----------------------------------------------------------------*
*hydro            component name      component type
2040000             "hotleg1"            pipe
*-----------------------------------------------------------------*
*hydro       no. volumes
2040001           4
*
*hydro         vol area                                  vol
2040101           0.                                     4
*
*hydro         jun area                                  jun
2040201           0.                                     3
*
*hydro          length                                   vol
2040301          5.3105                                    3
2040302          6.7932                                    4
*
*hydro          volume                                    vol
2040401         24.4874                                     1
2040402         24.3590                                     3
2040403         33.1338                                     4
```

```
*
*hydro        vert angle                                vol
2040601          0.                                    3
2040602         26.29                                    4
*
*hydro         delta z                                 vol
2040701          0.                                    3
2040702         3.0088                                    4
*
*hydro        roughness     hyd diam                          vol
2040801         .00015         0.                          4
*
*hydro          f loss        r loss                        jun
2040901          0.           0.                           2
2040902          .05          .05                           3
*
*hydro           fe                                      vol
2041001          0                                       4
*
*hydro         fvcahs                                    jun
2041101        000000                                       3
*
*hydro    ic    pressure      eq. temp                          vol
2041201   0        2249.2000 610.49000 1052.3000 .00000000 0.0       01
2041202   0        2248.8000 610.50000 1052.3000 .00000000 0.0       02
2041203   0        2248.6000 610.50000 1052.4000 .00000000 0.0       03
2041204   0        2248.9000 610.50000 1052.3000 .00000000 0.0       04
*
*hydro         vel/flw
2041300   0
*
*hydro        f flowrate   g flowrate    j flowrate                jun
2041301   47.696000 47.696000 0.0       01
2041302   47.697000 47.697000 0.0       02
2041303   47.697000 47.697000 0.0       03
*         junc dia   beta     c     m
2041401   2.417      0.       1.    1.   3
$*=*=*=
```

```
2060102          0.              90.              3.28
*
*hydro        roughness        hyd diam            fe
2060103        .00015            0.              00
*
2060200   0       2250.2000 610.50000 1052.2000 .00000000
*
*hydro    from        to        area     f loss    r loss    vcahs
2061101   204010000    206000000    0.0       0.       0.     00100
2062101   206010000    208000000    10.53     0.       0.     00100
*
*
2061201   44.855000 44.855000 0.0
2062201   20.777000 20.777000 0.0
*        junc dia   beta     c     m
2061110   2.492      0.       1.    1.
2062110   0.06458    0.       1.    1.
$*=*=*=*=*=*=*=*=*=*=*=*=*=*=*=*=*=*=*=*=*=*=*=*=*=*=*=*=*=*=*=*=*=*=*=*=*=*=*=*=*=*=***
$loop a u-tubes                                                    *
$-----------------------------------------------------------------*
*hydro          component name      component type
2080000           "sg tubes"           pipe
*-----------------------------------------------------------------*
*hydro      no. volumes
2080001         8
*
*hydro        vol area                                vol
2080101        10.53                                   8
*
*hydro        length                                  vol
2080301        7.834                                   8
*
*hydro        volume                                  vol
2080401        0.0                                     8
*
*hydro       vert angle                               vol
2080601        90.                                     4
2080602       -90.                                     8
*
*hydro       roughness     hyd diam                      vol
2080801       0.00015       .06458                        8
*
*hydro          fe                                     vol
2081001         00                                      8
*
*hydro        fvcahs                                   jun
2081101       000000                                     7
*
2081201   0       2242.9000 595.99000 1052.8000 .00000000 0.0      01
2081202   0       2234.7000 581.09000 1053.3000 .00000000 0.0      02
```

```
2081203   0        2226.7000 569.21000 1053.9000 .00000000 0.0       03
2081204   0        2218.6000 559.75000 1054.5000 .00000000 0.0       04
2081205   0        2213.2000 551.68000 1054.9000 .00000000 0.0       05
2081206   0        2210.2000 544.44000 1055.1000 .00000000 0.0       06
2081207   0        2207.4000 538.10000 1055.3000 .00000000 0.0       07
2081208   0        2204.6000 533.60000 1055.5000 .00000000 0.0       08
2081300   0
*
2081301   20.351000 20.351000 0.0       01
2081302   19.955000 19.955000 0.0       02
2081303   19.654000 19.654000 0.0       03
2081304   19.432000 19.432000 0.0       04
2081305   19.246000 19.246000 0.0       05
2081306   19.086000 19.086000 0.0       06
2081307   18.952000 18.952000 0.0       07
*         junc dia   beta     c     m
2081401   0.06458    0.       1.    1.   7
$*=*=*=*=*=*=*=*=*=*=*=*=*=*=*=*=*=*=*=*=*=*=*=*=*=*=*=*=*=*=*=*=*=*=*=*=*=*=*=*=*=*=*=*=*=*=*=*=***
$loop a steam generator outlet plenum                                  *
$-----------------------------------------------------------------------*
*hydro            component name      component type
2100000      "sg outle"                branch
*-----------------------------------------------------------------------*
*hydro           no. juns            vel/flw
2100001   2         0
*
*hydro            area               length              volume
2100101           0.0                3.28                115.1
*
*hydro         horz angle          vert angle            delta z
2100102           0.0                -90.                -3.28
*
*hydro          roughness           hyd diam               fe
2100103          0.00015             0.0                  00
*
2100200   0        2204.3000 533.61000 1055.5000 .00000000
*
*hydro    from          to           area      f loss    r loss    vcahs
2101101   210010000     212000000    4.9        0.       0.0      00100
2102101   208010000     210000000    10.53      0.0      0.0      00100
*
*
2101201   35.945000 35.945000 0.0
2102201   18.858000 18.858000 0.0
*         junc dia   beta     c     m
2101110   2.498      0.       1.    1.
2102110   0.06458    0.       1.    1.
$*=*=*=*=*=*=*=*=*=*=*=*=*=*=*=*=*=*=*=*=*=*=*=*=*=*=*=*=*=*=*=*=*=*=*=*=*=*=*=*=*=*=*=*=*=*=*=*=***
$loop a pump suction leg                                               *
$-----------------------------------------------------------------------*
```

```
*hydro          component name     component type
2120000           "rcsuctio"          pipe
*-----------------------------------------------------------------*
*hydro      no. volumes
2120001          5
*
*hydro        vol area                                vol
2120101          0.                                  5
*
*hydro        jun area                                jun
2120201          0.                                  4
*
*hydro         length                                 vol
2120301         4.9599                                 1
2120302         2.7219                                 2
2120303         7.1209                                 3
2120304         4.2250                                 4
2120305         7.1209                                 5
*
*hydro         volume                                  vol
2120401        27.4002                                  1
2120402        14.2667                                  2
2120403        37.3240                                  3
2120404        22.1451                                  4
2120405        37.3240                                  5
*
*hydro        vert angle                               vol
2120601         -60.                                  1
2120602         -90.                                  2
2120603        -39.54                                   3
2120604          0.                                  4
2120605         39.54                                   5
*
*hydro        delta z                                 vol
2120701        -4.2952                                  1
2120702        -2.7219                                  2
2120703        -4.5333                                  3
2120704          0.                                  4
2120705         4.5333                                  5
*
*hydro        roughness     hyd diam                        vol
2120801         .00015        0.                          5
*
*hydro         f loss       r loss                        jun
2120901          .053         .053                          1
2120902          0.           0.                          2
2120903          .1           .1                          3
2120904          .1           .1                          4
*
*hydro           fe                                     vol
```

```
2121001          0                                    5
*
*hydro        fvcahs                                  jun
2121101       000000                                   4
*
*hydro   ic   pressure      eq. temp                        vol
2121201  0        2194.8000 533.61000 1056.2000 .00000000 0.0      01
2121202  0        2194.9000 533.61000 1056.2000 .00000000 0.0      02
2121203  0        2196.0000 533.61000 1056.1000 .00000000 0.0      03
2121204  0        2195.8000 533.61000 1056.1000 .00000000 0.0      04
2121205  0        2194.2000 533.61000 1056.2000 .00000000 0.0      05
*
*hydro        vel/flw
2121300  0
*
*hydro        f flowrate   g flowrate    j flowrate              jun
2121301  37.889000 37.889000 0.0      01
2121302  37.888000 37.888000 0.0      02
2121303  37.888000 37.888000 0.0      03
2121304  37.888000 37.888000 0.0      04
*        junc dia   beta     c     m
2121401  2.583      0.      1.    1.   4
$*=*=*=*=*=*=*=*=*=*=*=*=*=*=*=*=*=*=*=*=*=*=*=*=*=*=*=*=*=*=*=*=*=*=*=*=*=*=*=*=*$
$loop a reactor coolant pump                                    $
$-----------------------------------------------------------------*
*hydro            component name      component type
2140000              "a rcp"              pump
*-----------------------------------------------------------------
*hydro           area              length             volume
2140101          0.0               4.0083             183.7506
*
*hydro        horz angle          vert angle           delta z
2140102          0                 90.0               4.0083
*
*hydro        equil flag
2140103          0
*
*hydro       from       jun area     f loss      r loss      vcahs
2140108      212010000   5.2414       0.0         0.0         00000
*
*hydro       to         jun area     f loss      r loss      vcahs
2140109      216000000   4.1247       0.0         0.0         00000
*        junc dia   beta     c     m
2140110  2.583      0.      1.    1.
2140111  2.292      0.      1.    1.
*
*hydro   ic    pressure      eq. temp
2140200  0        2250.5000 533.69000 1052.2000 .00000000
*
*hydro    vel/flw     f flowrate       g flowrate     j flowrate
```

```
2140201   0         37.889000 37.889000 0.0
2140202   0         48.128000 48.128000 0.0
$*=*=*=*=*=*=*=*=*=*=*=*=*=*=*=*=*=*=*=*=*=*=*=*=*=*=*=*=*=*=*=*=*=*=*=*=**
*hydro      ptdi   2fazi   diff i   tork i   pvel i   trip no.   rvrs i
2140301     0    0   -2        -1         0       523         0
2140302   1190.0000 1.0432773 88500.000 277.00000 23900.000 70000.000
2140303   47.180000 .00000000 .00000000 239.00000 23.900000 .00000000
*-----------------------------------------------------------------------
*hydro   rated pump vel.   init/rated vel.   rated flow    rated head
*
*hydro    rated torque     mom of inertia    rated dens    mtr torque
*
*hydro     coeff. tf2       coeff. tf0      coeff. tf1    coeff. tf3
*
*hydro      curve type          regime
2141100          1                 1
*
*hydro          v/a              head          $normal      (+q,+n)
2141101         0.000            1.747
2141102         0.042            1.714
2141103         0.097            1.682
2141104         0.150            1.648
2141105         0.198            1.597
2141106         0.253            1.540
2141107         0.299            1.481
2141108         0.352            1.414
2141109         0.399            1.368
2141110         0.451            1.326
2141111         0.497            1.304
2141112         0.548            1.280
2141113         0.593            1.265
2141114         0.646            1.250
2141115         0.670            1.255
2141116         0.692            1.261
2141117         0.718            1.261
2141118         0.739            1.253
2141119         0.773            1.238
2141120         0.792            1.219
2141121         0.824            1.197
2141122         0.852            1.170
2141123         0.878            1.139
2141124         0.914            1.098
2141125         0.947            1.055
2141126         0.974            1.017
2141127         1.000            1.000
*
*hydro      curve type          regime
2141200          1                 2
*
*hydro          a/v              head          $normal      (+q,+n)
```

```
2141201      0.000      -1.564
2141202      0.197      -1.104
2141203      0.397      -0.641
2141204      0.499      -0.411
2141205      0.598      -0.152
2141206      0.657       0.001
2141207      0.698       0.102
2141208      0.792       0.349
2141209      0.843       0.490
2141210      0.895       0.648
2141211      0.944       0.808
2141212      0.978       0.923
2141213      0.999       0.985
2141214      1.000       1.000
*
*hydro     curve type      regime
2141300      1             3
*
*hydro      v/a          head       $dissipation (-q,+n)
2141301     -1.000        4.224
2141302     -0.799        3.600
2141303     -0.597        2.993
2141304     -0.398        2.493
2141305     -0.201        2.061
2141306     -0.078        1.839
2141307     -0.023        1.765
2141308      0.000        1.747
*
*hydro     curve type      regime
2141400      1             4
*
*hydro      a/v          head       $dissipation (-q,+n)
2141401     -1.000        4.224
2141402     -0.799        3.542
2141403     -0.560        2.822
2141404     -0.399        2.395
2141405     -0.303        2.171
2141406     -0.222        1.986
2141407     -0.190        1.918
2141408     -0.150        1.850
2141409     -0.096        1.754
2141410     -0.044        1.685
2141411      0.000        1.636
*
*hydro     curve type      regime
2141500      1             5
*
*hydro      v/a          torque     $dissipation (-q,+n)
2141501      0.000        1.000
2141502      1.000        2.000
```

```
*
*hydro      curve type      regime
2141600       1             6
*
*hydro       v/a          torque      $dissipation (-q,+n)
2141601      0.000        1.636
2141602      1.000        2.000
*
*hydro      curve type      regime
2141700       1             7
*
*hydro       v/a          torque      $dissipation (-q,+n)
2141701     -1.000        0.200
2141702      0.000        1.000
*
*hydro      curve type      regime
2141800       1             8
*
*hydro       v/a          torque      $dissipation (-q,+n)
2141801     -1.000        0.200
2141802      0.000       -1.564
*
*hydro      curve type      regime
2141900       2             1
*
*hydro       v/a          torque      $normal     (+q,+n)
2141901      0.000        0.944
2141902      0.037        0.949
2141903      0.076        0.954
2141904      0.151        0.962
2141905      0.199        0.963
2141906      0.239        0.957
2141907      0.262        0.958
2141908      0.294        0.954
2141909      0.341        0.949
2141910      0.387        0.950
2141911      0.455        0.954
2141912      0.525        0.959
2141913      0.579        0.968
2141914      0.622        0.977
2141915      0.681        0.994
2141916      0.732        1.008
2141917      0.767        1.017
2141918      0.805        1.025
2141919      0.862        1.024
2141920      0.934        1.019
2141921      1.000        1.000
*
*hydro      curve type      regime
2142000       2             2
```

```
*
*hydro        a/v          torque       $normal      (+q,+n)
2142001       0.000        -1.475
2142002       0.127        -1.079
2142003       0.198        -0.883
2142004       0.288        -0.652
2142005       0.370        -0.449
2142006       0.480        -0.190
2142007       0.557        -0.006
2142008       0.651         0.209
2142009       0.739         0.405
2142010       0.820         0.597
2142011       0.897         0.764
2142012       0.959         0.912
2142013       1.000         1.000
*
*hydro      curve type       regime
2142100        2              3
*
*hydro        v/a          torque       $dissipation (-q,+n)
2142101      -1.000         3.058
2142102      -0.795         2.468
2142103      -0.724         2.267
2142104      -0.635         2.017
2142105      -0.525         1.699
2142106      -0.477         1.559
2142107      -0.445         1.479
2142108      -0.411         1.397
2142109      -0.385         1.334
2142110      -0.339         1.240
2142111      -0.294         1.155
2142112      -0.251         1.087
2142113      -0.208         1.026
2142114      -0.156         0.979
2142115      -0.112         0.954
2142116      -0.070         0.945
2142117       0.000         0.944
*
*hydro      curve type       regime
2142200        2              4
*
*hydro        a/v          torque       $dissipation (-q,+n)
2142201      -1.000         3.058
2142202      -0.821         2.590
2142203      -0.766         2.451
2142204      -0.701         2.301
2142205      -0.642         2.174
2142206      -0.592         2.076
2142207      -0.539         1.977
2142208      -0.481         1.878
```

```
2142209      -0.435        1.803
2142210      -0.396        1.741
2142211      -0.368        1.706
2142212      -0.343        1.671
2142213      -0.295        1.626
2142214      -0.256        1.590
2142215      -0.212        1.563
2142216      -0.163        1.536
2142217      -0.108        1.509
2142218      -0.049        1.490
2142219      -0.014        1.479
2142220       0.000        1.475
*
*hydro     curve type      regime
2142300       2             5
*
*hydro       a/v          torque      $dissipation (-q,+n)
2142301      0.000        -0.600
2142302      1.000        -0.200
*
*hydro     curve type      regime
2142400       2             6
*
*hydro       a/v          torque      $dissipation (-q,+n)
2142401      0.000         1.475
2142402      1.000        -0.200
*
*hydro     curve type      regime
2142500       2             7
*
*hydro       a/v          torque      $dissipation (-q,+n)
2142501     -1.000        -1.400
2142502      0.000        -0.600
*
*hydro     curve type      regime
2142600       2             8
*
*hydro       a/v          torque      $dissipation (-q,+n)
2142601     -1.000        -1.400
2142602      0.000        -1.475
*
*
* use semiscale two-phase multipliers
2143000 0 0.0 0.0  0.10 0.0  0.15 0.05  0.24 0.80  0.30 0.96
2143001  0.40 0.98 0.60 0.97 0.80 0.90  0.90 0.80  0.96 0.50  1.00  1.00
*
2143100 0 0.0 0.0  1.00 0.0
*
*hydro     trip no.       alpha vrc   numeric vrc
2146100      610           cntrlvar      050
```

```
*
*hydro      search arg         pump vel.
2146101        0.0               0.0
2146102       1300.0             1300.
*
$*=*=*=*=*=*=*=*=*=*=*=*=*=*=*=*=*=*=*=*=*=*=*=*=*=*=*=*=*=*=*=*=*=*=*=*=*=*=***
$loop a pump discharge and cold leg                                  *
$-----------------------------------------------------------------------*
*hydro             component name      component type
2160000              "pumpdis1"          snglvol
*-----------------------------------------------------------------------*
*hydro            area              length             volume
2160101          4.1247             3.9233              0.
*
*hydro         horz angle          vert angle           delta z
2160102            0.                0.                  0.
*
*hydro          roughness           hyd diam              fe
2160103          .00015               0.                 00
*
*hydro    ic    pressure       eq. temp
2160200   0         2288.9000 533.70000 1049.5000 .00000000
$*=*=*=*=*=*=*=*=*=*=*=*=*=*=*=*=*=*=*=*=*=*=*=*=*=*=*=*=*=*=*=*=*=*=*=*=*=*=***
*hydro             component name      component type
2180000              "pumpdis1"           branch
*-----------------------------------------------------------------------*
*hydro           no. juns            vel/flw
2180001   3         0
*
*hydro            area              length             volume
2180101          4.1247             5.4584              0.
*
*hydro         horz angle          vert angle           delta z
2180102            0.                0.                  0.
*
*hydro          roughness           hyd diam              fe
2180103          .00015               0.                 00
*
*hydro    ic    pressure       eq. temp
2180200   0         2288.5000 533.69000 1049.6000 .00000000
*
*hydro    from          to           area      f loss    r loss    vcahs
2181101   216010000     218000000    4.1247      0.        0.      00000
2182101   218010000     220000000    4.1247      0.        0.      00000
2183101   921010000     218000000    .3941       0.        0.      00100
*
*hydro                 f flowrate     g flowrate     j flowrate
2181201   48.113000 48.113000 0.0
2182201   48.112000 48.112000 0.0
2183201   -.0118518 -.0118518 0.0
```

```
*        junc dia   beta     c     m
2181110   2.292      0.       1.    1.
2182110   2.292      0.       1.    1.
2183110   0.0        0.       1.    1.
$*=*=*=
```

```
*hydro        f flowrate   g flowrate    j flowrate                jun
2201301   48.112000 48.112000 0.0       01
*        junc dia   beta     c     m
2201401   2.292      0.       1.    1.   1
*
$*=*=*=*=*=*=*=*=*=*=*=*=*=*=*=*=*=*=*=*=*=*=*=*=*=*=*=*=*=*=*=*=*=*=*=*=*=*=***
$loop a steam generator secondary                                  *
$-----------------------------------------------------------------*
*hydro            component name      component type
2540000             "top of d"          annulus
*-----------------------------------------------------------------*
*hydro      no. volumes
2540001          1
*
*hydro         vol area                                  vol
2540101          0.0                                     1
*
*hydro         length                                    vol
2540301          7.88                                     1
*
*hydro         volume                                     vol
2540401        548.17                                       1
*
*hydro        vert angle                                  vol
2540601         -90.                                      1
*
*hydro        roughness      hyd diam                          vol
2540801        0.00015        0.0                              1
*
*hydro           fe                                     vol
2541001           00                                      1
*
2541201   0        806.43000 507.82000 1114.9000 .34212000 0.0       01
*
$*=*=*=*=*=*=*=*=*=*=*=*=*=*=*=*=*=*=*=*=*=*=*=*=*=*=*=*=*=*=*=*=*=*=*=*=*=*=***
*hydro            component name      component type
2560000             "to feed"           sngljun
*-----------------------------------------------------------------*
*hydro    from          to           area      f loss    r loss   fvcahs
2560101   254010000     258000000     0.0       0.0       0.0     030000
*
2560201   0        2.8370000 1.0287000 0.0
*        junc dia   beta     c     m
2560110   2.59       0.       1.    1.
$*=*=*=*=*=*=*=*=*=*=*=*=*=*=*=*=*=*=*=*=*=*=*=*=*=*=*=*=*=*=*=*=*=*=*=*=*=*=***
*hydro            component name      component type
2580000             "feedwate"          annulus
*-----------------------------------------------------------------*
*hydro      no. volumes
2580001          1
```

```
*
*-----------------------------------------------------------------*
*hydro        vol area                          vol
2580101        0.0                               1
*
*hydro        length                            vol
2580301        4.405                             1
*
*hydro        volume                            vol
2580401        180.5                             1
*
*hydro        vert angle                        vol
2580601        -90.                              1
*
*hydro        roughness     hyd diam                    vol
2580801        0.00015       2.59                        1
*
*hydro        fe                                vol
2581001        00                                1
*
2581201   0        807.97000 491.68000 1114.9000 .06819760 0.0       01
*
$*=*=*=*=*=*=*=*=*=*=*=*=*=*=*=*=*=*=*=*=*=*=*=*=*=*=*=*=*=*=*=*=*=*=*=*=*=***
*hydro        component name      component type
2600000        "feed jun"          sngljun
*-----------------------------------------------------------------*
*hydro    from        to          area      f loss    r loss   fvcahs
2600101   258010000   262000000   0.        2.0       3.0      030000
*
2600201   0        5.6658000 5.1485000 0.0
*        junc dia   beta     c     m
2600110   1.24       0.       1.    1.
$*=*=*=*=*=*=*=*=*=*=*=*=*=*=*=*=*=*=*=*=*=*=*=*=*=*=*=*=*=*=*=*=*=*=*=*=*=***
*hydro        component name      component type
2620000        "downcome"          annulus
*-----------------------------------------------------------------*
*hydro      no. volumes
2620001        4
*
*hydro        vol area                          vol
2620101        17.94                             1
2620102        5.669                             4
*
*hydro        length                            vol
2620301        7.834                             3
2620302        6.016                             4
*
*hydro        volume                            vol
2620401        0.                                4
*
```

```
*hydro        vert angle                                vol
2620601         -90.                                    4
*
*hydro        roughness     hyd diam                        vol
2620801        0.00015       1.24                          1
2620802        0.00015       0.362                          4
*
*hydro           fe                                    vol
2621001           00                                     4
*
*hydro          vcahs                                  jun
2621101         01100                                     1
2621102         01000                                     3
*
2621201   0        809.48000 492.59000 1114.9000 .03483950 0.0       01
2621202   0        810.16000 492.88000 1114.9000 .02651670 0.0       02
2621203   0        812.21000 493.13000 1114.8000 .02040330 0.0       03
2621204   0        814.04000 493.28000 1114.8000 .01448350 0.0       04
2621300   0
*
2621301   17.347000 16.185000 0.0       01
2621302   17.208000 16.357000 0.0       02
2621303   17.109000 16.281000 0.0       03
*         junc dia   beta     c     m
2621401   0.362      0.       1.    1.   3
$*=*=*=
```

```
2660401        281.2                                  1
2660402        367.0                                  2
2660403        369.4                                  3
2660404        383.8                                  4
*
*hydro       vert angle                               vol
2660601         90.                                   4
*
*hydro       roughness     hyd diam                        vol
2660801       0.00015       0.126                          4
*
*hydro         f loss       r loss                       jun
2660901         12.0         12.0                         1
2660902          9.0          9.0                         3
*
*hydro           fe                                    vol
2661001         100                                     4
*
*hydro        fvcahs                                   jun
2661101       000000                                     3
*
2661201   0        812.33000 508.29000 1114.8000 .37404000 0.0       01
2661202   0        810.60000 508.56000 1114.9000 .63526000 0.0       02
2661203   0        808.93000 508.29000 1115.1000 .73587000 0.0       03
2661204   0        807.29000 508.01000 1115.1000 .85331000 0.0       04
*
2661300   0
*
2661301   3.1847000 5.2341000 0.0       01
2661302   5.0996000 8.5578000 0.0       02
2661303   6.5509000 11.645000 0.0       03
*        junc dia   beta     c     m
2661401   0.016      0.       1.    1.   3 *Hyd.Diam. of tube supp. pl.
$*=*=*=
```

```
*hydro        horz angle        vert angle        delta z
2700102         0.0              90.              4.405
*
*hydro        roughness         hyd diam          fe
2700103       0.00015           10.53             00
*
2700200   0       806.79000 507.92000 1115.4000 .85406000
$*=*=*=*=*=*=*=*=*=*=*=*=*=*=*=*=*=*=*=*=*=*=*=*=*=*=*=*=*=*=*=*=*=*=*=*=*=*=*=***
*hydro          component name     component type
2720000           "abv tube"        sngljun
*-----------------------------------------------------------------------*
*hydro    from         to          area      f loss    r loss   fvcahs
2720101   270010000    274000000   0.0       0.0       0.0      030000
*
2720201   0       8.2555000 9.9979000 0.0
*        junc dia   beta     c     m
2720110   5.190      0.       1.    1.
*
$*=*=*=*=*=*=*=*=*=*=*=*=*=*=*=*=*=*=*=*=*=*=*=*=*=*=*=*=*=*=*=*=*=*=*=*=*=*=*=***
*hydro          component name     component type
2740000           "below se"        snglvol
*-----------------------------------------------------------------------*
*hydro          area              length            volume
2740101         0.0               7.88              500.44
*
*hydro        horz angle        vert angle        delta z
2740102         0.               90.               7.88
*
*hydro        roughness         hyd diam          fe
2740103       0.00015           5.19              00
*
2740200   0       806.41000 507.86000 1115.1000 .87642000
$*=*=*=*=*=*=*=*=*=*=*=*=*=*=*=*=*=*=*=*=*=*=*=*=*=*=*=*=*=*=*=*=*=*=*=*=*=*=*=***
*hydro          component name     component type
2780000           "separato"        separatr
*-----------------------------------------------------------------------*
*hydro         no. juns          vel/flw
2780001   3       0
*
*hydro          area              length            volume
2780101         0.0               5.29              697.2
*
*hydro        horz angle        vert angle        delta z
2780102         0.0              90.0               5.29
*
*hydro        roughness         hyd diam          fe
2780103       0.00015           0.17              00
*
2780200   0       805.54000 507.71000 1115.0000 .18072000
*
```

```
*hydro    from        to          area      f loss    r loss    vcahs
2781101   278010000   282000000     0.0    127.5   127.5   01000  0.02
2782101   278000000   254000000     0.0     90.0    90.0   01000  1.0
2783101   274010000   278000000     0.0     0.0     0.0    01020
*
2781201   4.7025000 4.8133000 0.0
2782201   1.3416000 1.1743000 0.0
2783201   9.7460000 9.7460000 0.0
$*=*=*=
```

```
3040001          4
*
*hydro        vol area                          vol
3040101          0.                            4
*
*hydro         length                          vol
3040301        5.3105                            3
3040302        6.7932                            4
*
*hydro         volume                           vol
3040401        24.4875                           1
3040402        24.3590                           3
3040403        33.1338                           4
*
*hydro       vert angle                         vol
3040601          0.                            3
3040602        26.29                             4
*
*hydro        delta z                          vol
3040701          0.                            3
3040702        3.0088                            4
*
*hydro       roughness     hyd diam                    vol
3040801        .00015        0.                     4
*
*hydro         f loss       r loss                  jun
3040901          0.          0.                    2
3040902         .05         .05                     3
*
*hydro           fe                            vol
3041001          0                             4
*
*hydro        fvcahs                           jun
3041101       000000                             3
*
*hydro   ic   pressure     eq. temp                    vol
3041201  0       2249.2000 610.49000 1052.3000 .00000000 0.0      01
3041202  0       2248.8000 610.50000 1052.3000 .00000000 0.0      02
3041203  0       2248.6000 610.50000 1052.4000 .00000000 0.0      03
3041204  0       2248.9000 610.50000 1052.3000 .00000000 0.0      04
*
*hydro        vel/flw
3041300  0
*
*hydro       f flowrate   g flowrate   j flowrate              jun
3041301  47.711000 47.711000 0.0      01
3041302  47.711000 47.711000 0.0      02
3041303  47.712000 47.712000 0.0      03
*        junc dia   beta     c     m
3041401  2.417      0.      1.    1.   3
```

```
*
$*=*=*=
```

```
3080601          90.                                    4
3080602         -90.                                    8
*
*hydro        roughness      hyd diam                        vol
3080801        0.00015        .06458                         8
*
*hydro           fe                                     vol
3081001          00                                     8
*
*hydro         fvcahs                                   jun
3081101        000000                                     7
*
3081201   0        2242.9000 595.94000 1052.8000 .00000000 0.0       01
3081202   0        2234.7000 580.99000 1053.3000 .00000000 0.0       02
3081203   0        2226.6000 569.07000 1053.9000 .00000000 0.0       03
3081204   0        2218.6000 559.57000 1054.5000 .00000000 0.0       04
3081205   0        2213.1000 551.47000 1054.9000 .00000000 0.0       05
3081206   0        2210.2000 544.21000 1055.1000 .00000000 0.0       06
3081207   0        2207.3000 537.85000 1055.3000 .00000000 0.0       07
3081208   0        2204.5000 533.33000 1055.5000 .00000000 0.0       08
3081300   0
*
3081301   20.356000 20.356000 0.0       01
3081302   19.958000 19.958000 0.0       02
3081303   19.657000 19.657000 0.0       03
3081304   19.434000 19.434000 0.0       04
3081305   19.247000 19.247000 0.0       05
3081306   19.087000 19.087000 0.0       06
3081307   18.952000 18.952000 0.0       07
*         junc dia   beta     c     m
3081401   0.06458    0.       1.    1.   7
$*=*=*=*=*=*=*=*=*=*=*=*=*=*=*=*=*=*=*=*=*=*=*=*=*=*=*=*=*=*=*=*=*=*=*=*=*=*=*=*=*=*=*=*=***
$loop b steam generator outlet plenum                                  *
$-----------------------------------------------------------------------*
*hydro            component name      component type
3100000             "sg outle"            branch
*-----------------------------------------------------------------------*
*hydro          no. juns           vel/flw
3100001   2        0
*
*hydro           area              length             volume
3100101          0.0               3.28               115.1
*
*hydro        horz angle          vert angle           delta z
3100102          0.0               -90.               -3.28
*
*hydro         roughness           hyd diam               fe
3100103        0.00015              0.0                 00
*
3100200   0        2204.3000 533.34000 1055.5000 .00000000
```

```
*
*hydro    from          to           area      f loss    r loss    vcahs
3101101   310010000     312000000    4.9         0.       0.0      00100
3102101   308010000     310000000    10.53       0.0      0.0      00100
*
*
3101201   35.946000 35.946000 0.0
3102201   18.858000 18.858000 0.0
*         junc dia   beta     c     m
3101110   2.498      0.       1.    1.
3102110   0.06458    0.       1.    1.
$*=*=*=*=*=*=*=*=*=*=*=*=*=*=*=*=*=*=*=*=*=*=*=*=*=*=*=*=*=*=*=*=*=*=*=*=*=*=*=*=*=**
$loop b pump suction leg                                                  *
$-----------------------------------------------------------------------*
*hydro            component name      component type
3120000             "rcsuctio"            pipe
*-----------------------------------------------------------------------
*hydro       no. volumes
3120001          5
*
*hydro          vol area                                  vol
3120101            0.                                     5
*
*hydro          length                                    vol
3120301          4.9599                                     1
3120302          2.7219                                     2
3120303          7.1209                                     3
3120304          4.2250                                     4
3120305          7.1209                                     5
*
*hydro          volume                                     vol
3120401         27.4002                                      1
3120402         14.2667                                      2
3120403         37.3240                                      3
3120404         22.1451                                      4
3120405         37.3240                                      5
*
*hydro         vert angle                                   vol
3120601          -60.                                      1
3120602          -90.                                      2
3120603         -39.54                                       3
3120604            0.                                      4
3120605          39.54                                        5
*
*hydro          delta z                                   vol
3120701         -4.2952                                      1
3120702         -2.7219                                      2
3120703         -4.5333                                      3
3120704            0.                                      4
3120705          4.5333                                       5
```

```
*
*hydro        roughness      hyd diam                          vol
3120801         .00015         0.                              5
*
*hydro          f loss        r loss                          jun
3120901          .053          .053                            1
3120902           0.            0.                             2
3120903           .1            .1                             4
*
*hydro            fe                                         vol
3121001           0                                           5
*
*hydro         fvcahs                                        jun
3121101        000000                                         4
*
*hydro    ic    pressure      eq. temp                          vol
3121201   0        2194.8000 533.34000 1056.2000 .00000000 0.0       01
3121202   0        2194.9000 533.34000 1056.2000 .00000000 0.0       02
3121203   0        2196.0000 533.34000 1056.1000 .00000000 0.0       03
3121204   0        2195.8000 533.34000 1056.1000 .00000000 0.0       04
3121205   0        2194.1000 533.34000 1056.2000 .00000000 0.0       05
*
*hydro          vel/flw
3121300   0
*
*hydro         f flowrate   g flowrate    j flowrate                jun
3121301   37.889000 37.889000 0.0       01
3121302   37.889000 37.889000 0.0       02
3121303   37.888000 37.888000 0.0       03
3121304   37.888000 37.888000 0.0       04
*         junc dia   beta     c     m
3121401   2.583      0.       1.    1.   4
$*=*=*=*=*=*=*=*=*=*=*=*=*=*=*=*=*=*=*=*=*=*=*=*=*=*=*=*=*=*=*=*=*=*=*=*=*=*=*=*=*=*=***
$loop b reactor coolant pump                                      *
$-----------------------------------------------------------------*
*hydro             component name      component type
3140000               "b rcp"              pump
*-----------------------------------------------------------------
*hydro            area              length             volume
3140101           0.0               4.0083             183.7506
*
*hydro         horz angle          vert angle           delta z
3140102           0                 90.0               4.0083
*
*hydro         equil flag
3140103           0
*
*hydro       from       jun area     f loss      r loss      vcahs
3140108      312010000   5.2414       0.0         0.0         00000
*
```

```
*hydro      to         jun area     f loss      r loss      vcahs
3140109     316000000   4.1247       0.0         0.0         00000
*         junc dia   beta     c     m
3140110   2.583      0.       1.    1.
3140111   2.292      0.       1.    1.
*
*hydro    ic    pressure       eq. temp
3140200   0         2250.5000 533.42000 1052.2000 .00000000
*
*hydro    vel/flw     f flowrate       g flowrate     j flowrate
3140201   0         37.889000 37.889000 0.0
3140202   0         48.129000 48.129000 0.0
$*=*=*=
```

```
*
*hydro        horz angle        vert angle        delta z
3180102          0.                0.                0.
*
*hydro        roughness         hyd diam          fe
3180103        .00015              0.              00
*
*hydro    ic    pressure      eq. temp
3180200   0        2288.3000 533.42000 1049.6000 .00000000
*
*hydro    from         to          area      f loss    r loss    vcahs
3181101   316010000    318000000   4.1247    0.        0.        00000
3182101   318010000    320000000   4.1247    0.        0.        00000
3183101   922010000    318000000   .3941     0.        0.        00100
3184101   318000000    335000000   .0645     0.        0.        00100
*
*hydro                 f flowrate     g flowrate     j flowrate
3181201   48.113000 48.113000 0.0
3182201   48.113000 48.113000 0.0
3183201   -.0077800 -.0077800 0.0
3184201   .209001-3 .209001-3 0.0
*         junc dia   beta     c     m
3181110   2.292      0.       1.    1.
3182110   2.292      0.       1.    1.
3183110   0.0        0.       1.    1.
$*=*=*=
```

```
3200701          0.                                  2
*
*hydro       roughness     hyd diam                        vol
3200801        .00015        0.                          2
*
*hydro         f loss       r loss                        jun
3200901         .029         .029                          1
*
*hydro           fe                                     vol
3201001          0                                       2
*
*hydro        fvcahs                                     jun
3201101       000000                                      1
*
*hydro   ic   pressure     eq. temp                        vol
3201201  0       2288.4000 533.42000 1049.6000 .00000000 0.0      01
3201202  0       2291.8000 533.42000 1049.3000 .00000000 0.0      02
*
*hydro        vel/flw
3201300  0
*
*hydro       f flowrate   g flowrate   j flowrate              jun
3201301  48.113000 48.113000 0.0      01
*        junc dia   beta    c    m
3201401  2.292      0.      1.   1.   1
*
$*=*=*=
```

```
3360101   335010000     339000000    .0645     9.245     9.245     00100
*         junc dia   beta     c     m
3360110   0.0        0.       1.    1.
*
*hydro    vel/flw       f flowrate     g flowrate     j flowrate
3360201   0         .00000000 .00000000 0.0
*
*hydro                 valve type
3360300                   srvvlv
*
*hydro      cntrlvar   table no.
3360301       213
$*=*=*=
```

```
*
*hydro          area            length          volume
3390101         .0645           25.2031         0.
*
*hydro       horz angle       vert angle       delta z
3390102         0.            90.0             9.0
*
*hydro       roughness        hyd diam         fe
3390103         .00015          0.             00
*
*hydro   ic   pressure     eq. temp
3390200  0      2251.5000 544.84000 1052.2000 .00000000
*
$*=*=*=*=*=*=*=*=*=*=*=*=*=*=*=*=*=*=*=*=*=*=*=*=*=*=*=*=*=*=*=*=*=*=*=*=*=*=*=***
*hydro          component name     component type
3400000            "przrdome"          branch
*-----------------------------------------------------------------------*
*hydro         no. juns          vel/flw
3400001  2      0
*
*hydro          area            length          volume
3400101         0.              3.5             89.7972
*
*hydro       horz angle       vert angle       delta z
3400102         0.            -90.             -3.5
*
*hydro       roughness        hyd diam         fe
3400103         .00015          0.             00
*
*hydro   ic   pressure     quality
3400200  0      2250.1000 690.19000 1051.9000 1.0000000
*
*hydro   from        to        area     f loss   r loss   vcahs
3401101  339010000   340000000  .0645    5.14     5.14    00000
*
*hydro   from        to        area     f loss   r loss   vcahs
3402101  340010000   341000000  38.4845  0.       0.      00000
*
*
*hydro              f flowrate    g flowrate    j flowrate
3401201  -5.562400 17.085000 0.0
*hydro              f flowrate    g flowrate    j flowrate
3402201  .15070000 .966642-4 0.0
$*=*=*=*=*=*=*=*=*=*=*=*=*=*=*=*=*=*=*=*=*=*=*=*=*=*=*=*=*=*=*=*=*=*=*=*=*=*=*=***
*hydro          component name     component type
3410000            "przr"              pipe
*-----------------------------------------------------------------------*
*hydro      no. volumes
3410001        7
*
```

```
*hydro        vol area                                vol
3410101          0.                                   7
*
*hydro        jun area                                jun
3410201       38.4845                                  6
*
*hydro        length                                  vol
3410301        4.8522                                  6
3410302        3.5                                     7
*
*hydro        volume                                   vol
3410401       186.7343                                  6
3410402       89.7972                                   7
*
*hydro       vert angle                                vol
3410601        -90.                                    7
*
*hydro       roughness     hyd diam                        vol
3410801       .00015        0.                            7
*
*hydro          fe                                   vol
3411001          0                                     7
*
*hydro        fvcahs                                  jun
3411101       000000                                   6
*
*hydro   ic   pressure      quality                        vol
3411201  0       2250.3000 690.21000 1052.3000 1.0000000 0.0      01
3411202  0       2250.5000 690.23000 1052.2000 1.0000000 0.0      02
3411203  0       2250.8000 690.26000 1052.2000 .91158000 0.0      03
3411204  0       2251.6000 690.02000 1052.1000 .709941-6 0.0      04
3411205  0       2252.8000 690.45000 1052.1000 .807225-4 0.0      05
3411206  0       2254.1000 690.56000 1052.0000 .358145-4 0.0      06
3411207  0       2255.1000 688.69000 1051.9000 .150288-4 0.0      07
*
*hydro        vel/flw
3411300  0
*
*hydro       f flowrate   g flowrate    j flowrate              jun
3411301  .14189000 .269186-3 0.0      01
3411302  24.112000 .441896-3 0.0      02
3411303  .00797731 -30.83100 0.0      03
3411304  .723528-3 -.2420000 0.0      04
3411305  .732000-3 -.2582100 0.0      05
3411306  .743294-3 -.1751100 0.0      06
*        junc dia   beta     c     m
3411401  7.000      0.       1.    1.   6
$*=*=*=*=*=*=*=*=*=*=*=*=*=*=*=*=*=*=*=*=*=*=*=*=*=*=*=*=*=*=*=*=*=*=*=*=*=*=*=*=*=*=*=*=*=*=*=***
*hydro            component name      component type
3420000              "surgejct"          sngljun
```

```
*----------------------------------------------------------------------*
*hydro    from          to           area      f loss    r loss   fvcahs
3420101   341010000     343000000    .7213      .472      .965    030000
*         junc dia   beta     c     m
3420110   0.875      0.       1.    1.
*
*hydro    vel/flw       f flowrate     g flowrate     j flowrate
3420201   0         .03974050 -.0446737 0.0
$*=*=*=
```

```
3431101         000000                                  2
*
*hydro    ic    pressure      eq. temp                          vol
3431201   0         2256.8000 653.04000 1051.8000 .00000000 0.0       01
3431202   0         2258.0000 628.19000 1051.7000 .00000000 0.0       02
3431203   0         2258.0000 617.04000 1051.7000 .00000000 0.0       03
*
*hydro          vel/flw
3431300   0
*
*hydro         f flowrate   g flowrate    j flowrate                jun
3431301   .04679690 .04679690 0.0       01
3431302   .04636770 .04636770 0.0       02
*         junc dia   beta     c     m
3431401   0.875      0.       1.    1.   2
$*=*=*=
```

```
*hydro   time     pressure     quality
3450201   0.      17.7         1.
$*=*=*=*=*=*=*=*=*=*=*=*=*=*=*=*=*=*=*=*=*=*=*=*=*=*=*=*=*=*=*=*=*=*=*=*=*=*=*=***
*hydro            component name      component type
3460000             "codesafe"           valve
*-----------------------------------------------------------------------*
*hydro    from          to           area      f loss    r loss    vcahs
3460101   340000000     347000000    .04050      0.        0.      00100
*         junc dia   beta     c     m
3460110   0.0        0.       1.    1.
*
*hydro    vel/flw       f flowrate     g flowrate     j flowrate
3460201   0         .00000000 .00000000 0.0
*
*hydro                 valve type
3460300                  trpvlv
*
*hydro                  trip no.
3460301                    618
$*=*=*=*=*=*=*=*=*=*=*=*=*=*=*=*=*=*=*=*=*=*=*=*=*=*=*=*=*=*=*=*=*=*=*=*=*=*=*=***
*hydro            component name      component type
3470000             "safetysi"          tmdpvol
*-----------------------------------------------------------------------*
*hydro         area       length      volume
3470101       1.0e6        0.0        1.0e+06
*
*hydro      horz angle  vert angle    delta z
3470102        0.0         0.0          0.0
*
*hydro       roughness   hyd diam       fe
3470103         0.0        0.0          10
*
*hydro   ic        trip no.       alpha vrc      numeric vrc
3470200  02
*
*hydro   time     pressure     quality
3470201   0.      365.         1.
*
$*=*=*=*=*=*=*=*=*=*=*=*=*=*=*=*=*=*=*=*=*=*=*=*=*=*=*=*=*=*=*=*=*=*=*=*=*=*=*=***
$loop b steam generator secondary                                    *
$-----------------------------------------------------------------------*
*hydro            component name      component type
3540000             "top of d"          annulus
*-----------------------------------------------------------------------*
*hydro       no. volumes
3540001           1
*
*hydro          vol area                                    vol
3540101           0.0                                       1
*
```

```
*hydro          length                                  vol
3540301          7.88                                    1
*
*hydro          volume                                  vol
3540401         548.17                                   1
*
*hydro        vert angle                                vol
3540601         -90.                                    1
*
*hydro        roughness     hyd diam                          vol
3540801        0.00015        0.0                            1
*
*hydro           fe                                    vol
3541001           00                                     1
*
3541201   0        804.18000 507.43000 1115.0000 .33753000 0.0       01
*
$*=*=*=*=*=*=*=*=*=*=*=*=*=*=*=*=*=*=*=*=*=*=*=*=*=*=*=*=*=*=*=*=*=*=*=*=*=*=*=***
*hydro            component name      component type
3560000             "to feed"            sngljun
*-----------------------------------------------------------------------*
*hydro    from          to           area      f loss    r loss   fvcahs
3560101   354010000     358000000     0.0       0.0       0.0     030000
*         junc dia   beta     c     m
3560110   2.59       0.       1.    1.
*
3560201   0        2.8223000 1.0173000 0.0
$*=*=*=*=*=*=*=*=*=*=*=*=*=*=*=*=*=*=*=*=*=*=*=*=*=*=*=*=*=*=*=*=*=*=*=*=*=*=*=***
*hydro            component name      component type
3580000             "feedwate"           annulus
*-----------------------------------------------------------------------*
*hydro       no. volumes
3580001           1
*
*-----------------------------------------------------------------------*
*hydro         vol area                                vol
3580101          0.0                                    1
*
*hydro          length                                  vol
3580301         4.405                                    1
*
*hydro          volume                                  vol
3580401         180.5                                    1
*
*hydro        vert angle                                vol
3580601         -90.                                    1
*
*hydro        roughness     hyd diam                          vol
3580801        0.00015        2.59                           1
*
```

```
*hydro          fe                                  vol
3581001          00                                   1
*
3581201   0        805.73000 491.30000 1115.0000 .06651430 0.0       01
*
$*=*=*=*=*=*=*=*=*=*=*=*=*=*=*=*=*=*=*=*=*=*=*=*=*=*=*=*=*=*=*=*=*=*=*=*=*=*=*=*=*=*=*=*=***
*hydro          component name      component type
3600000           "feed jun"          sngljun
*-----------------------------------------------------------------------*
*hydro    from          to          area      f loss    r loss   fvcahs
3600101   358010000     362000000    0.        2.0       3.0     030000
*         junc dia   beta     c     m
3600110   1.24       0.       1.    1.
*
3600201   0        5.6663000 5.1492000 0.0
$*=*=*=*=*=*=*=*=*=*=*=*=*=*=*=*=*=*=*=*=*=*=*=*=*=*=*=*=*=*=*=*=*=*=*=*=*=*=*=*=*=*=*=*=***
*hydro          component name      component type
3620000           "downcome"          annulus
*-----------------------------------------------------------------------*
*hydro      no. volumes
3620001          4
*
*hydro         vol area                            vol
3620101         17.94                               1
3620102         5.669                               4
*
*hydro         length                              vol
3620301         7.834                               3
3620302         6.016                               4
*
*hydro         volume                              vol
3620401          0.                                4
*
*hydro        vert angle                           vol
3620601         -90.                                4
*
*hydro        roughness     hyd diam                     vol
3620801        0.00015       1.24                        1
3620802        0.00015       0.362                       4
*
*hydro          fe                                  vol
3621001          00                                   4
*
*hydro         vcahs                               jun
3621101         01100                                1
3621102         01000                                3
*
3621201   0        807.23000 492.19000 1114.9000 .03392690 0.0       01
3621202   0        807.91000 492.47000 1114.9000 .02581430 0.0       02
3621203   0        809.96000 492.71000 1114.9000 .01984860 0.0       03
```

```
3621204   0         811.80000 492.86000 1114.8000 .01408570 0.0       04
3621300   0
*
3621301   17.362000 16.204000 0.0       01
3621302   17.227000 16.377000 0.0       02
3621303   17.130000 16.307000 0.0       03
*         junc dia   beta     c     m
3621401   0.362      0.       1.    1.   3
$*=*=*=
```

```
*
*hydro        fvcahs                                jun
3661101        000000                                 3
*
3661201   0        810.08000 507.91000 1114.9000 .37479000 0.0       01
3661202   0        808.35000 508.18000 1114.9000 .63615000 0.0       02
3661203   0        806.68000 507.90000 1115.1000 .73653000 0.0       03
3661204   0        805.03000 507.62000 1115.2000 .85386000 0.0       04
*
3661300   0
*
3661301   3.1943000 5.2496000 0.0       01
3661302   5.1209000 8.5943000 0.0       02
3661303   6.5785000 11.702000 0.0       03
*        junc dia   beta     c     m
3661401   0.016      0.       1.    1.   3 *Hyd.Diam. of tube supp. pl.
$*=*=*=
```

```
*
$*=*=*=*=*=*=*=*=*=*=*=*=*=*=*=*=*=*=*=*=*=*=*=*=*=*=*=*=*=*=*=*=*=*=*=*=*=*=*=***
*hydro          component name      component type
3740000           "below se"          snglvol
*-----------------------------------------------------------------*
*hydro          area              length            volume
3740101          0.0               7.88             500.44
*
*hydro        horz angle          vert angle          delta z
3740102          0.                90.               7.88
*
*hydro        roughness           hyd diam             fe
3740103        0.00015             5.19               00
*
3740200   0        804.15000 507.47000 1115.2000 .87690000
$*=*=*=*=*=*=*=*=*=*=*=*=*=*=*=*=*=*=*=*=*=*=*=*=*=*=*=*=*=*=*=*=*=*=*=*=*=*=*=***
*hydro          component name      component type
3780000           "separato"          separatr
*-----------------------------------------------------------------*
*hydro          no. juns            vel/flw
3780001   3        0
*
*hydro          area              length            volume
3780101          0.0               5.29             697.2
*
*hydro        horz angle          vert angle          delta z
3780102          0.0               90.0               5.29
*
*hydro        roughness           hyd diam             fe
3780103        0.00015             0.17               00
*
3780200   0        803.28000 507.33000 1115.0000 .17715000
*
*hydro    from        to            area      f loss    r loss    vcahs
3781101   378010000   382000000     0.0    127.5   127.5   01000  0.02
3782101   378000000   354000000     0.0     90.0    90.0   01000  1.0
3783101   374010000   378000000     0.0     0.0     0.0    01020
*         junc dia   beta     c     m
3781110   1.0        0.       1.    1.
3782110   2.59       0.       1.    1.
3783110   1.0        0.       1.    1.
*
3781201   4.7352000 4.8459000 0.0
3782201   1.3379000 1.1705000 0.0
3783201   9.7989000 9.7989000 0.0
$*=*=*=*=*=*=*=*=*=*=*=*=*=*=*=*=*=*=*=*=*=*=*=*=*=*=*=*=*=*=*=*=*=*=*=*=*=*=*=***
*hydro          component name      component type
3820000           "steam do"          branch
*-----------------------------------------------------------------*
*hydro          no. juns            vel/flw
```

```
3820001   1         0
*
*hydro          area             length            volume
3820101          0.0              6.33             695.0
*
*hydro        horz angle         vert angle          delta z
3820102          0.0              90.               6.33
*
*hydro         roughness          hyd diam             fe
3820103         0.00015            0.167              00
*
3820200   0        801.93000 507.10000 1114.9000 1.0000000
*
*
*hydro    from          to          area      f loss    r loss    vcahs
3821101   382010000     650000000    1.39       1.5       1.5      00000
*         junc dia   beta     c     m
3821110   0.167      0.       1.    1.
*
*
3821201   371.22000 383.28000 0.0
*
$*=*=*=*=*=*=*=*=*=*=*=*=*=*=*=*=*=*=*=*=*=*=*=*=*=*=*=*=*=*=*=*=*=*=*=*=*=*=***
$loop c - includes the hot leg, steam generator inlet plenum, u-tubes, $
$steam generator outlet plenum, pump suction leg, rc pump,and cold leg $
$*=*=*=*=*=*=*=*=*=*=*=*=*=*=*=*=*=*=*=*=*=*=*=*=*=*=*=*=*=*=*=*=*=*=*=*=*=*=**$
$loop c hot leg                                                    $
$-----------------------------------------------------------------*
*hydro            component name      component type
4040000             "hotleg3"             pipe
*-----------------------------------------------------------------*
*hydro       no. volumes
4040001          3
*
*hydro         vol area                                  vol
4040101          0.                                      3
*
*hydro          length                                   vol
4040301         5.3105                                     3
*
*hydro          volume                                    vol
4040401        24.4874                                      1
4040402        24.3590                                      3
*
*hydro        vert angle                                  vol
4040601          0.                                      3
*
*hydro        roughness      hyd diam                          vol
4040801         .00015         0.                            3
*
```

```
*hydro          fe                                  vol
4041001         0                                    3
*
*hydro        fvcahs                                 jun
4041101       000000                                  2
*
*hydro   ic   pressure     eq. temp                     vol
4041201  0       2249.2000 610.49000 1052.3000 .00000000 0.0      01
4041202  0       2248.9000 610.50000 1052.3000 .00000000 0.0      02
4041203  0       2248.6000 610.50000 1052.4000 .00000000 0.0      03
*
*hydro        vel/flw
4041300  0
*
*hydro       f flowrate   g flowrate   j flowrate              jun
4041301  47.689000 47.689000 0.0      01
4041302  47.689000 47.689000 0.0      02
*        junc dia   beta     c     m
4041401  2.417      0.      1.    1.   2
$*=*=*=*=*=*=*=*=*=*=*=*=*=*=*=*=*=*=*=*=*=*=*=*=*=*=*=*=*=*=*=*=*=*=*=*=*=*=*=*=*=*=***
*hydro            component name      component type
4050000             "hotlegte"           branch
*-----------------------------------------------------------------------*
*hydro          no. juns           vel/flw
4050001  2        0
*
*hydro           area              length             volume
4050101           0.               6.7932            33.1338
*
*hydro        horz angle          vert angle           delta z
4050102           0.               26.29               3.0088
*
*hydro         roughness           hyd diam              fe
4050103          .00015              0.                 00
*
*hydro   ic   pressure     eq. temp
4050200  0       2248.3000 610.50000 1052.4000 .00000000
*
*hydro   from          to          area      f loss    r loss    vcahs
4051101  404010000    405000000   0.        .05       .05      00000
4052101  343010000    405000000   0.        0.        0.       00100
*        junc dia   beta     c     m
4051110  2.417      0.      1.    1.
4052110  0.875      0.      1.    1.
*
*hydro                f flowrate     g flowrate     j flowrate
4051201  47.689000 47.689000 0.0
4052201  .04622110 .04622110 0.0
$*=*=*=*=*=*=*=*=*=*=*=*=*=*=*=*=*=*=*=*=*=*=*=*=*=*=*=*=*=*=*=*=*=*=*=*=*=*=*=*=*=*=**$
$loop c steam generator inlet plenum                                  $
```

```
*-----------------------------------------------------------------------*
*hydro          component name      component type
4060000          "sg inlet"          branch
*-----------------------------------------------------------------------*
*hydro          no. juns            vel/flw
4060001   2        0
*
*hydro          area                length              volume
4060101          0.                  3.28                115.1
*
*hydro        horz angle          vert angle          delta z
4060102          0.                  90.                 3.28
*
*hydro         roughness           hyd diam              fe
4060103         .00015               0.                  00
*
4060200   0        2250.2000 610.50000 1052.2000 .00000000
*
*hydro    from          to          area      f loss    r loss    vcahs
4061101   405010000     406000000    0.0        0.        0.      00100
4062101   406010000     408000000    10.53      0.        0.      00100
*         junc dia   beta     c     m
4061110   2.492      0.       1.    1.
4062110   0.06458    0.       1.    1.
*
*
4061201   44.854000 44.854000 0.0
4062201   20.776000 20.776000 0.0
$*=*=*=*=*=*=*=*=*=*=*=*=*=*=*=*=*=*=*=*=*=*=*=*=*=*=*=*=*=*=*=*=*=*=*=*=*=*=*=*=***
$loop c u-tubes                                                        *
$-----------------------------------------------------------------------*
*hydro          component name      component type
4080000          "sg tubes"          pipe
*-----------------------------------------------------------------------*
*hydro       no. volumes
4080001          8
*
*hydro         vol area                                    vol
4080101         10.53                                        8
*
*hydro         length                                      vol
4080301         7.834                                        8
*
*hydro         volume                                       vol
4080401         0.0                                         8
*
*hydro        vert angle                                    vol
4080601         90.                                         4
4080602        -90.                                         8
*
```

```
*hydro        roughness      hyd diam                        vol
4080801         0.00015        .06458                         8
*
*hydro            fe                                     vol
4081001           00                                       8
*
*hydro         fvcahs                                    jun
4081101        000000                                      7
*
4081201   0        2242.9000 595.98000 1052.8000 .00000000 0.0       01
4081202   0        2234.7000 581.07000 1053.3000 .00000000 0.0       02
4081203   0        2226.6000 569.18000 1053.9000 .00000000 0.0       03
4081204   0        2218.6000 559.70000 1054.5000 .00000000 0.0       04
4081205   0        2213.1000 551.63000 1054.9000 .00000000 0.0       05
4081206   0        2210.2000 544.38000 1055.1000 .00000000 0.0       06
4081207   0        2207.3000 538.04000 1055.3000 .00000000 0.0       07
4081208   0        2204.5000 533.53000 1055.5000 .00000000 0.0       08
4081300   0
*
4081301   20.350000 20.350000 0.0       01
4081302   19.953000 19.953000 0.0       02
4081303   19.653000 19.653000 0.0       03
4081304   19.430000 19.430000 0.0       04
4081305   19.244000 19.244000 0.0       05
4081306   19.084000 19.084000 0.0       06
4081307   18.950000 18.950000 0.0       07
*         junc dia   beta     c     m
4081401   0.06458    0.       1.    1.   7
$*=*=*=*=*=*=*=*=*=*=*=*=*=*=*=*=*=*=*=*=*=*=*=*=*=*=*=*=*=*=*=*=*=*=*=*=*=*=*=*=***
$loop c steam generator outlet plenum                                  *
$-----------------------------------------------------------------------*
*hydro            component name      component type
4100000             "sg outle"            branch
*-----------------------------------------------------------------------*
*hydro          no. juns           vel/flw
4100001   2         0
*
*hydro           area               length              volume
4100101          0.0                3.28               115.1
*
*hydro        horz angle          vert angle            delta z
4100102          0.0               -90.               -3.28
*
*hydro         roughness           hyd diam               fe
4100103         0.00015              0.0                 00
*
4100200   0        2204.3000 533.54000 1055.5000 .00000000
*
*hydro    from          to          area      f loss    r loss    vcahs
4101101   410010000     412000000    4.9        0.       0.0      00100
```

```
4102101   408010000    410000000    10.53      0.0       0.0      00100
*         junc dia   beta     c     m
4101110   2.498      0.       1.    1.
4102110   0.06458    0.       1.    1.
*
*
4101201   35.941000 35.941000 0.0
4102201   18.856000 18.856000 0.0
$*=*=*=*=*=*=*=*=*=*=*=*=*=*=*=*=*=*=*=*=*=*=*=*=*=*=*=*=*=*=*=*=*=*=*=*=*=*=*=**
$loop c pump suction leg                                        *
$-----------------------------------------------------------------------*
*hydro            component name      component type
4120000             "rcsuctio"            pipe
*-----------------------------------------------------------------------*
*hydro       no. volumes
4120001          5
*
*hydro         vol area                                  vol
4120101          0.                                     5
*
*hydro          length                                   vol
4120301         4.9599                                     1
4120302         2.7219                                     2
4120303         7.1209                                     3
4120304         4.2250                                     4
4120305         7.1209                                     5
*
*hydro          volume                                    vol
4120401        27.4002                                      1
4120402        14.2667                                      2
4120403        37.3240                                      3
4120404        22.1451                                      4
4120405        37.3240                                      5
*
*hydro        vert angle                                  vol
4120601         -60.                                     1
4120602         -90.                                     2
4120603        -39.54                                      3
4120604          0.                                     4
4120605         39.54                                       5
*
*hydro         delta z                                   vol
4120701        -4.2952                                      1
4120702        -2.7219                                      2
4120703        -4.5333                                      3
4120704          0.                                     4
4120705         4.5333                                       5
*
*hydro        roughness      hyd diam                          vol
4120801         .00015         0.                                5
```

```
*
*hydro          f loss        r loss                          jun
4120901          .053          .053                            1
4120902           0.            0.                             2
4120903           .1            .1                             4
*
*hydro            fe                                         vol
4121001           0                                           5
*
*hydro          fvcahs                                        jun
4121101         000000                                          4
*
*hydro    ic    pressure      eq. temp                          vol
4121201   0        2194.8000 533.54000 1056.2000 .00000000 0.0       01
4121202   0        2194.9000 533.54000 1056.2000 .00000000 0.0       02
4121203   0        2196.0000 533.54000 1056.1000 .00000000 0.0       03
4121204   0        2195.8000 533.54000 1056.1000 .00000000 0.0       04
4121205   0        2194.2000 533.55000 1056.2000 .00000000 0.0       05
*
*hydro          vel/flw
4121300   0
*
*hydro         f flowrate   g flowrate    j flowrate                jun
4121301   37.884000 37.884000 0.0       01
4121302   37.884000 37.884000 0.0       02
4121303   37.884000 37.884000 0.0       03
4121304   37.884000 37.884000 0.0       04
*         junc dia   beta     c     m
4121401   2.583      0.       1.    1.   4
$*=*=*=
```

```
4140110   2.583      0.       1.    1.
4140111   2.292      0.       1.    1.
*
*hydro    ic    pressure       eq. temp
4140200   0         2250.5000 533.62000 1052.2000 .00000000
*
*hydro    vel/flw     f flowrate       g flowrate     j flowrate
4140201   0         37.885000 37.885000 0.0
4140202   0         48.123000 48.123000 0.0
$*=*=*=*=*=*=*=*=*=*=*=*=*=*=*=*=*=*=*=*=*=*=*=*=*=*=*=*=*=*=*=*=*=*=*=*=*=*=*=*=*=*=*=**
*hydro      ptdi   2fazi   diff i   tork i   pvel i   trip no.   rvrs i
4140301   214  214   -2        -1       214       523         0
4140302   1190.0000 1.0432773 88500.000 277.00000 23900.000 70000.000
4140303   47.180000 .00000000 .00000000 239.00000 23.900000 .00000000
*-----------------------------------------------------------------------
*hydro   rated pump vel.   init/rated vel.   rated flow    rated head
*
*hydro    rated torque     mom of inertia    rated dens    mtr torque
*
*hydro     coeff. tf2        coeff. tf0      coeff. tf1    coeff. tf3
*
$*=*=*=*=*=*=*=*=*=*=*=*=*=*=*=*=*=*=*=*=*=*=*=*=*=*=*=*=*=*=*=*=*=*=*=*=*=*=*=*=*=*=*=***
$loop c pump discharge and cold leg                                  *
$-----------------------------------------------------------------------*
*hydro             component name      component type
4160000             "pumpdis3"          snglvol
*-----------------------------------------------------------------------*
*hydro           area              length             volume
4160101          4.1247             3.9233              0.
*
*hydro         horz angle          vert angle           delta z
4160102           0.                 0.                 0.
*
*hydro          roughness           hyd diam              fe
4160103           .00015              0.                 00
*
*hydro    ic    pressure       eq. temp
4160200   0         2289.0000 533.63000 1049.5000 .00000000
$*=*=*=*=*=*=*=*=*=*=*=*=*=*=*=*=*=*=*=*=*=*=*=*=*=*=*=*=*=*=*=*=*=*=*=*=*=*=*=*=*=*=*=***
*hydro             component name      component type
4180000             "pumpdis3"          branch
*-----------------------------------------------------------------------*
*hydro           no. juns            vel/flw
4180001   4         0
*
*hydro           area              length             volume
4180101          4.1247             5.4584              0.
*
*hydro         horz angle          vert angle           delta z
4180102           0.                 0.                 0.
```

```
*
*hydro          roughness           hyd diam                fe
4180103          .00015              0.                  00
*
*hydro    ic    pressure       eq. temp
4180200   0         2288.1000 533.62000 1049.6000 .00000000
*
*hydro    from          to           area      f loss    r loss    vcahs
4181101   416010000     418000000    4.1247      0.        0.      00000
4182101   418010000     420000000    4.1247      0.        0.      00000
4183101   923010000     418000000    .3941       0.        0.      00100
4184101   418000000     337000000    .0645       0.        0.      00100
*         junc dia   beta     c     m
4181110   2.292      0.       1.    1.
4182110   2.292      0.       1.    1.
4183110   0.0        0.       1.    1.
*
*hydro                  f flowrate     g flowrate     j flowrate
4181201   48.107000 48.107000 0.0
4182201   48.109000 48.109000 0.0
4183201   .01135380 .01135380 0.0
4184201   .178166-3 .178166-3 0.0
$*=*=*=
```

```
4200901          .029          .029                          1
*
*hydro           fe                                     vol
4201001           0                                       2
*
*hydro         fvcahs                                   jun
4201101        000000                                     1
*
*hydro    ic    pressure      eq. temp                         vol
4201201   0        2288.4000 533.62000 1049.6000 .00000000 0.0       01
4201202   0        2291.8000 533.62000 1049.3000 .00000000 0.0       02
*
*hydro         vel/flw
4201300   0
*
*hydro         f flowrate   g flowrate    j flowrate                jun
4201301   48.109000 48.109000 0.0       01
*         junc dia   beta     c     m
4201401   2.292      0.       1.    1.   1
*
$*=*=*=
```

```
*hydro            component name      component type
4560000             "to feed"           sngljun
*-----------------------------------------------------------------*
*hydro    from          to          area      f loss    r loss   fvcahs
4560101   454010000     458000000     0.0       0.0       0.0     030000
*         junc dia   beta     c     m
4560110   2.59       0.       1.    1.
*
4560201   0         2.8323000 1.0248000 0.0
$*=*=*=*=*=*=*=*=*=*=*=*=*=*=*=*=*=*=*=*=*=*=*=*=*=*=*=*=*=*=*=*=*=*=*=*=*=*=*=*=*=*=*=*=***
*hydro            component name      component type
4580000             "feedwate"          annulus
*-----------------------------------------------------------------*
*hydro       no. volumes
4580001           1
*
*-----------------------------------------------------------------*
*hydro          vol area                                  vol
4580101           0.0                                     1
*
*hydro           length                                   vol
4580301           4.405                                     1
*
*hydro           volume                                    vol
4580401           180.5                                     1
*
*hydro         vert angle                                  vol
4580601           -90.                                    1
*
*hydro         roughness      hyd diam                          vol
4580801         0.00015         2.59                           1
*
*hydro            fe                                     vol
4581001            00                                      1
*
4581201   0         807.44000 491.59000 1114.9000 .06763900 0.0       01
*
$*=*=*=*=*=*=*=*=*=*=*=*=*=*=*=*=*=*=*=*=*=*=*=*=*=*=*=*=*=*=*=*=*=*=*=*=*=*=*=*=*=*=*=*=***
*hydro            component name      component type
4600000             "feed jun"          sngljun
*-----------------------------------------------------------------*
*hydro    from          to          area      f loss    r loss   fvcahs
4600101   458010000     462000000    0.        2.0       3.0     030000
*         junc dia   beta     c     m
4600110   1.24       0.       1.    1.
*
4600201   0         5.6657000 5.1485000 0.0
$*=*=*=*=*=*=*=*=*=*=*=*=*=*=*=*=*=*=*=*=*=*=*=*=*=*=*=*=*=*=*=*=*=*=*=*=*=*=*=*=*=*=*=*=***
*hydro            component name      component type
4620000             "downcome"          annulus
```

```
*----------------------------------------------------------------------*
*hydro      no. volumes
4620001          4
*
*hydro        vol area                                vol
4620101        17.94                                   1
4620102        5.669                                   4
*
*hydro        length                                  vol
4620301        7.834                                   3
4620302        6.016                                   4
*
*hydro        volume                                  vol
4620401          0.                                  4
*
*hydro       vert angle                               vol
4620601        -90.                                   4
*
*hydro       roughness     hyd diam                        vol
4620801       0.00015       1.24                          1
4620802       0.00015       0.362                          4
*
*hydro          fe                                   vol
4621001          00                                    4
*
*hydro        vcahs                                   jun
4621101        01100                                     1
4621102        01000                                     3
*
4621201   0        808.95000 492.49000 1114.9000 .03453000 0.0       01
4621202   0        809.63000 492.78000 1114.9000 .02627590 0.0       02
4621203   0        811.68000 493.02000 1114.8000 .02021130 0.0       03
4621204   0        813.52000 493.17000 1114.8000 .01434580 0.0       04
4621300   0
*
4621301   17.351000 16.190000 0.0       01
4621302   17.214000 16.363000 0.0       02
4621303   17.115000 16.289000 0.0       03
*        junc dia   beta     c     m
4621401   0.362      0.       1.    1.   3
$*=*=*=*=*=*=*=*=*=*=*=*=*=*=*=*=*=*=*=*=*=*=*=*=*=*=*=*=*=*=*=*=*=*=*=*=*=*=*=*=*=*=***
*hydro            component name      component type
4640000             "dc to bo"          sngljun
*----------------------------------------------------------------------*
*hydro    from          to           area      f loss    r loss   fvcahs
4640101   462010000     466000000    0.0        2.4       2.4     030100
*
*        junc dia   beta     c     m
4640110   0.126      0.       1.    1.
4640201   0         17.017000 19.074000 0.0
```

```
$*=*=*=*=*=*=*=*=*=*=*=*=*=*=*=*=*=*=*=*=*=*=*=*=*=*=*=*=*=*=*=*=*=*=*=*=*=*=*=***
*hydro          component name      component type
4660000           "sg boile"            pipe
*-----------------------------------------------------------------------*
*hydro      no. volumes
4660001          4
*
*hydro        vol area                                vol
4660101         0.0                                   4
*
*hydro         length                                vol
4660301         6.016                                  1
4660302         7.834                                  4
*
*hydro         volume                                  vol
4660401         281.2                                   1
4660402         367.0                                   2
4660403         369.4                                   3
4660404         383.8                                   4
*
*hydro        vert angle                               vol
4660601         90.                                   4
*
*hydro        roughness     hyd diam                        vol
4660801        0.00015       0.126                          4
*
*hydro         f loss       r loss                        jun
4660901         12.0         12.0                           1
4660902          9.0         9.0                            3
*
*hydro          fe                                     vol
4661001         100                                      4
*
*hydro        fvcahs                                    jun
4661101        000000                                     3
*
4661201   0        811.80000 508.20000 1114.8000 .37405000 0.0       01
4661202   0        810.07000 508.48000 1114.9000 .63539000 0.0       02
4661203   0        808.40000 508.20000 1115.1000 .73596000 0.0       03
4661204   0        806.76000 507.92000 1115.2000 .85339000 0.0       04
*
4661300   0
*
4661301   3.1866000 5.2367000 0.0       01
4661302   5.1042000 8.5652000 0.0       02
4661303   6.5570000 11.657000 0.0       03
*         junc dia   beta     c     m
4661401   0.016      0.       1.    1.   3 *Hyd.Diam. of tube supp. pl.
$*=*=*=*=*=*=*=*=*=*=*=*=*=*=*=*=*=*=*=*=*=*=*=*=*=*=*=*=*=*=*=*=*=*=*=*=*=*=*=***
*hydro          component name      component type
```

```
4680000          "abv boil"       sngljun
*----------------------------------------------------------------------*
*hydro   from        to          area     f loss   r loss   fvcahs
4680101  466010000   470000000   0.0      0.0      0.0      030000
*        junc dia   beta    c    m
4680110  0.126      0.      1.   1.
*
4680201  0        10.658000 12.971000 0.0
$*=*=*=*=*=*=*=*=*=*=*=*=*=*=*=*=*=*=*=*=*=*=*=*=*=*=*=*=*=*=*=*=*=*=*=*=*=*=*=***
*hydro          component name     component type
4700000          "above tu"       snglvol
*----------------------------------------------------------------------*
*hydro          area             length           volume
4700101          0.0              4.405            383.5
*
*hydro        horz angle        vert angle        delta z
4700102          0.               90.              4.405
*
*hydro        roughness         hyd diam          fe
4700103        0.00015           10.53            00
*
4700200  0        806.26000 507.83000 1115.4000 .85416000
$*=*=*=*=*=*=*=*=*=*=*=*=*=*=*=*=*=*=*=*=*=*=*=*=*=*=*=*=*=*=*=*=*=*=*=*=*=*=*=***
*hydro          component name     component type
4720000          "abv tube"       sngljun
*----------------------------------------------------------------------*
*hydro   from        to          area     f loss   r loss   fvcahs
4720101  470010000   474000000   0.0      0.0      0.0      030000
*        junc dia   beta    c    m
4720110  5.190      0.      1.   1.
*
4720201  0        8.2647000 10.009000 0.0
*
$*=*=*=*=*=*=*=*=*=*=*=*=*=*=*=*=*=*=*=*=*=*=*=*=*=*=*=*=*=*=*=*=*=*=*=*=*=*=*=***
*hydro          component name     component type
4740000          "below se"       snglvol
*----------------------------------------------------------------------*
*hydro          area             length           volume
4740101          0.0              7.88             500.44
*
*hydro        horz angle        vert angle        delta z
4740102          0.               90.              7.88
*
*hydro        roughness         hyd diam          fe
4740103        0.00015           5.19             00
*
4740200  0        805.88000 507.77000 1115.1000 .87649000
$*=*=*=*=*=*=*=*=*=*=*=*=*=*=*=*=*=*=*=*=*=*=*=*=*=*=*=*=*=*=*=*=*=*=*=*=*=*=*=***
*hydro          component name     component type
4780000          "separato"       separatr
```

```
*----------------------------------------------------------------------*
*hydro          no. juns          vel/flw
4780001   3        0
*
*hydro          area              length            volume
4780101          0.0               5.29             697.2
*
*hydro        horz angle         vert angle          delta z
4780102          0.0               90.0               5.29
*
*hydro         roughness          hyd diam              fe
4780103         0.00015             0.17               00
*
4780200   0        805.01000 507.62000 1115.0000 .17956000
*
*hydro    from        to            area      f loss    r loss    vcahs
4781101   478010000   482000000      0.0    127.5   127.5   01000  0.02
4782101   478000000   454000000      0.0     90.0    90.0   01000  1.0
4783101   474010000   478000000      0.0     0.0     0.0    01020
*         junc dia   beta     c     m
4781110   1.0        0.       1.    1.
4782110   2.59       0.       1.    1.
4783110   1.0        0.       1.    1.
*
4781201   4.7100000 4.8214000 0.0
4782201   1.3401000 1.1726000 0.0
4783201   9.7575000 9.7575000 0.0
$*=*=*=*=*=*=*=*=*=*=*=*=*=*=*=*=*=*=*=*=*=*=*=*=*=*=*=*=*=*=*=*=*=*=*=*=*=*=***
*hydro             component name      component type
4820000              "steam do"           branch
*----------------------------------------------------------------------*
*hydro          no. juns          vel/flw
4820001   1        0
*
*hydro          area              length            volume
4820101          0.0               6.33             695.0
*
*hydro        horz angle         vert angle          delta z
4820102          0.0               90.                6.33
*
*hydro         roughness          hyd diam              fe
4820103         0.00015             0.167              00
*
4820200   0        803.67000 507.39000 1114.9000 1.0000000
*
*
*hydro    from          to            area      f loss    r loss    vcahs
4821101   482010000     750000000    1.39       1.5       1.5      00000
*         junc dia   beta     c     m
4821110   0.167      0.       1.    1.
```

```
*
*
4821201   367.17000 381.39000 0.0
*
$*=*=*=*=*=*=*=*=*=*=*=*=*=*=*=*=*=*=*=*=*=*=*=*=*=*=*=*=*=*=*=*=*=*=*=*=*=*=*=*=*=*=*=*=***
$                                                                    *
$main feedwater lines for steam generator a,b,and c.from the feedwater *
$header to each steam generator.includes motor and steam driven        *
$auxillary feedwater system.                                           *
$                                                                    *
$-----------------------------------------------------------------------*
$line a feedwater regulating valve                                     $
*-----------------------------------------------------------------------*
*hydro            component name      component type
5050000            "reg vlv "           valve
*-----------------------------------------------------------------------*
*hydro    from          to           area      f loss    r loss    vcahs
5050101   878010000     510000000    1.0596     0.0       0.0       00000
*         junc dia   beta     c     m
5050110   0.0        0.       1.    1.
*
*hydro    vel/flw       f flowrate     g flowrate     j flowrate
5050201   0         16.939000 16.939000 0.0
*
*hydro                 valve type
5050300                 srvvlv
*
*hydro     cntrlvar   table no.
5050301       529          0
*
*hydro                 area/posn    f csubv     r csubv
5050401                  0.0         0.0         0.0
5050402                  0.75      589.3943      0.0
5050403                  1.0       982.3239      0.0
$*=*=*=*=*=*=*=*=*=*=*=*=*=*=*=*=*=*=*=*=*=*=*=*=*=*=*=*=*=*=*=*=*=*=*=*=*=*=*=*=*=*=*=*=***
$line a steam turbine auxfeed connection volume                        $
*-----------------------------------------------------------------------*
*hydro            component name      component type
5100000            "saux ln "           snglvol
*-----------------------------------------------------------------------*
*hydro           area              length              volume
5100101          1.0596              0.0               193.3770
*
*hydro        horz angle          vert angle           delta z
5100102          0.0                0.0                 0.0
*
*hydro         roughness           hyd diam              fe
5100103          0.00015            1.1615               00
*
*hydro    ic    pressure       energy       quality
```

```
5100200   0        846.79000 417.50000 1114.1000 .00000000
$*=*=*=*=*=*=*=*=*=*=*=*=*=*=*=*=*=*=*=*=*=*=*=*=*=*=*=*=*=*=*=*=*=*=*=*=***
*hydro            component name      component type
5150000             "chk vlv "            valve
*-----------------------------------------------------------------------*
*hydro    from          to           area      f loss    r loss    vcahs
5150101   510010000     520000000    1.0596     7.5365    7.5365   00000
*
*hydro    vel/flw       f flowrate     g flowrate     j flowrate
5150201   0         16.956000 16.956000 0.0
*
*hydro                 valve type
5150300                  chkvlv
*
*hydro    chkvlv type  init. posn  back press  leak ratio
5150301        0           0           0           0
$*=*=*=*=*=*=*=*=*=*=*=*=*=*=*=*=*=*=*=*=*=*=*=*=*=*=*=*=*=*=*=*=*=*=*=*=***
$line a piping from motor driven auxfeed connection to steam           $
$generator a                                                           $
*-----------------------------------------------------------------------*
*hydro            component name      component type
5200000             "maux ln "           snglvol
*-----------------------------------------------------------------------*
*hydro           area              length             volume
5200101          1.0596              0.0              204.6139
*
*hydro         horz angle          vert angle            delta z
5200102          0.0                0.0                 0.0
*
*hydro          roughness           hyd diam               fe
5200103          0.00015            1.1615                00
*
*hydro    ic    pressure       energy       quality
5200200   0         831.30000 417.51000 1114.4000 .00000000
$*=*=*=*=*=*=*=*=*=*=*=*=*=*=*=*=*=*=*=*=*=*=*=*=*=*=*=*=*=*=*=*=*=*=*=*=***
$junction connecting feed line a to steam generator a                  $
$model as a trip valve                                                 $
*-----------------------------------------------------------------------*
*hydro            component name      component type
5250000             "jun fw a"           valve
*-----------------------------------------------------------------------*
*hydro    from          to           area      f loss    r loss    vcahs
5250101   520010000     258000000    0.7175   11.3909   11.3909    00100
*         junc dia   beta     c     m
5250110   0.0        0.       1.    1.
*
*hydro    vel/flw       f flowrate     g flowrate     j flowrate
5250201   0         16.957000 17.031000 0.0
*
*hydro                 valve type
```

```
5250300                 trpvlv
*
*hydro                 trip no.
5250301                  707
*
$*=*=*=*=*=*=*=*=*=*=*=*=*=*=*=*=*=*=*=*=*=*=*=*=*=*=*=*=*=*=*=*=*=*=*=*=*=***
$steam generator a motor and steam driven auxfeed lines                *
$modeled as check valves with line resistance                          *
$*=*=*=*=*=*=*=*=*=*=*=*=*=*=*=*=*=*=*=*=*=*=*=*=*=*=*=*=*=*=*=*=*=*=*=*=*=***
*hydro            component name      component type
5300000             "s aux a"            valve
*-----------------------------------------------------------------------*
*hydro    from          to           area      f loss    r loss    vcahs
5300101   532010000     510000000    0.0799     6.396     6.396    00000
*         junc dia   beta     c     m
5300110   0.0        0.       1.    1.
*
*hydro    vel/flw       f velocity     g velocity     j velocity
5300201   0         .00000000 .00000000 0.0
*
*hydro                 valve type
5300300                  chkvlv
*
*hydro    chkvlv type  init. posn  back press  leak ratio
5300301        0           0          0.0         0.0
*
$*=*=*=*=*=*=*=*=*=*=*=*=*=*=*=*=*=*=*=*=*=*=*=*=*=*=*=*=*=*=*=*=*=*=*=*=*=***
$main header for the steam driven auxfeed system                       *
$-----------------------------------------------------------------------*
$*=*=*=*=*=*=*=*=*=*=*=*=*=*=*=*=*=*=*=*=*=*=*=*=*=*=*=*=*=*=*=*=*=*=*=*=*=***
*hydro            component name      component type
5320000             "s aux hd"           snglvol
*-----------------------------------------------------------------------*
*         junc dia   beta     c     m
5150110   0.0        0.       1.    1.
*hydro            area              length              volume
5320101          0.1810              0.0               12.1860
*
*hydro         horz angle          vert angle            delta z
5320102           0.0                0.0                 0.0
*
*hydro          roughness           hyd diam               fe
5320103          0.00015              0.0                 00
*
*hydro    ic    pressure       energy       quality
5320200   0         844.51000 329.85000 1114.2000 .00000000
$*=*=*=*=*=*=*=*=*=*=*=*=*=*=*=*=*=*=*=*=*=*=*=*=*=*=*=*=*=*=*=*=*=*=*=*=*=***
*-----------------------------------------------------------------------*
*hydro            component name      component type
5340000             "stm aux "           tmdpjun
```

```
*-----------------------------------------------------------------------*
*hydro    from          to            area
5340101   536000000     532000000     0.0
*
*hydro    vel/flw       trip no.      alpha vrc     numeric vrc
5340200     1           704             p           532010000
*
*hydro     p            f flowrate    g flowrate    j flowrate
5340201 -1.0e99           0.0           0.0           0
5340202   0.0             0.0           0.0           0
5340203   0.0            82.88          0.0           0
5340204 1330.42           82.88          0.0           0
5340205 1360.56           75.97          0.0           0
5340206 1386.39           69.07          0.0           0
5340207 1412.22           62.16          0.0           0
5340208 1429.44           55.25          0.0           0
5340209 1455.28           48.35          0.0           0
5340210 1468.19           41.44          0.0           0
5340211 1481.11           34.53          0.0           0
5340212 1489.72           27.63          0.0           0
5340213 1494.03           20.72          0.0           0
5340214 1498.33           13.81          0.0           0
5340215 1502.64            6.91          0.0           0
5340216 1506.94            0.0           0.0           0
$*=*=*=
```

```
5400110   0.0       0.       1.    1.
*
*hydro    vel/flw       f velocity     g velocity     j velocity
5400201   0         .00000000 .00000000 0.0
*
*hydro                  valve type
5400300                    chkvlv
*
*hydro    chkvlv type  init. posn  back press  leak ratio
5400301        0           0          0.0         0.0
*
$*=*=*=*=*=*=*=*=*=*=*=*=*=*=*=*=*=*=*=*=*=*=*=*=*=*=*=*=*=*=*=*=*=*=*=*=*=*=*=*=***
$header for motor driven auxfeed water system                                  *
$*=*=*=*=*=*=*=*=*=*=*=*=*=*=*=*=*=*=*=*=*=*=*=*=*=*=*=*=*=*=*=*=*=*=*=*=*=*=*=*=***
*hydro              component name      component type
5420000              "m aux hd"           snglvol
*-----------------------------------------------------------------------*
*hydro            area                length              volume
5420101          0.1600              17.65                0.0
*
*hydro         horz angle          vert angle            delta z
5420102           0.0                0.0                  0.0
*
*hydro          roughness           hyd diam               fe
5420103          0.00015              0.0                 00
*
*hydro    ic    pressure       energy       quality
5420200   0         824.83000 389.81000 1114.6000 .00000000
*-----------------------------------------------------------------------*
*hydro              component name      component type
5440000              "mtr aux "           tmdpjun
*-----------------------------------------------------------------------*
*hydro    from          to              area
5440101   546000000     542000000      0.0
*
*hydro    vel/flw       trip no.       alpha vrc      numeric vrc
5440200      1            703              p           542010000
*
*hydro     p            f flowrate     g flowrate     j flowrate
5440201 -1.0e99            0.0            0.0            0
5440202   0.0              0.0            0.0            0
5440203   0.0             82.88           0.0            0
5440204 1291.67           82.88           0.0            0
5440205 1313.19           75.97           0.0            0
5440206 1323.96           69.07           0.0            0
5440207 1345.49           62.16           0.0            0
5440208 1356.25           55.25           0.0            0
5440209 1377.78           48.35           0.0            0
5440210 1388.54           41.44           0.0            0
5440211 1410.07           34.53           0.0            0
```

```
5440212 1420.83          27.63          0.0            0
5440213 1431.60          20.72          0.0            0
5440214 1442.36          13.81          0.0            0
5440215 1459.58           6.91          0.0            0
5440216 1463.89           0.0           0.0            0
$*=*=*=*=*=*=*=*=*=*=*=*=*=*=*=*=*=*=*=*=*=*=*=*=*=*=*=*=*=*=*=*=*=*=*=*=*=*=*=*=***
*hydro            component name      component type
5460000             "mtraux h"          tmdpvol
*-----------------------------------------------------------------------*
*hydro        area       length      volume
5460101      0.16000       0.0        1.0e+06
*
*hydro      horz angle  vert angle    delta z
5460102        0.0         0.0          0.0
*
*hydro       roughness   hyd diam       fe
5460103         0.0        0.0          10
*
*hydro   ic        trip no.       alpha vrc      numeric vrc
5460200  01
*
*hydro   time     eq. temp     quality
5460201 0.0       70.0         0.0
$*=*=*=*=*=*=*=*=*=*=*=*=*=*=*=*=*=*=*=*=*=*=*=*=*=*=*=*=*=*=*=*=*=*=*=*=*=*=*=*=***
$main steam line a - from steam generator a to steam header - includes $
$msiv,safety valves,and porv's associated with steam line a.          $
*-----------------------------------------------------------------------*
*hydro            component name      component type
5500000              "mslp a1"           snglvol
*-----------------------------------------------------------------------*
*hydro           area              length             volume
5500101          3.0940            274.8631             0.0
*
*hydro         horz angle          vert angle           delta z
5500102          0.0                0.0                 0.0
*
*hydro          roughness           hyd diam              fe
5500103          0.00015            1.9848               00
*
*hydro    ic    pressure       energy       quality
5500200   0         758.61000 499.54000 1115.8000 .99970000
$*=*=*=*=*=*=*=*=*=*=*=*=*=*=*=*=*=*=*=*=*=*=*=*=*=*=*=*=*=*=*=*=*=*=*=*=*=*=*=*=***
$main steam isolation valve                                          $
*-----------------------------------------------------------------------*
*hydro            component name      component type
5550000              "msiv a"            valve
*-----------------------------------------------------------------------*
*hydro    from          to           area      f loss    r loss    vcahs
5550101   550010000     560000000    3.0940    0.08      0.08      00100
*         junc dia   beta     c     m
```

```
5550110   0.0       0.       1.    1.
*
*hydro    vel/flw       f flowrate     g flowrate     j flowrate
5550201   0         164.30000 180.59000 0.0
*
*hydro                  valve type
5550300                    mtrvlv
*
*hydro     open trip   close trip  change rate  init posn  table no.
5550301       663         662         0.2857       1.0         0
$*=*=*=*=*=*=*=*=*=*=*=*=*=*=*=*=*=*=*=*=*=*=*=*=*=*=*=*=*=*=*=*=*=*=*=*=*=*=*=*=***
$msiv to header tank                                                    $
*-----------------------------------------------------------------------*
*hydro            component name      component type
5600000              "mslp a2"            snglvol
*-----------------------------------------------------------------------*
*hydro            area                length              volume
5600101          3.0940              20.0                0.0
*
*hydro         horz angle          vert angle            delta z
5600102          0.0                 0.0                 0.0
*
*hydro          roughness           hyd diam               fe
5600103          0.00015             1.9848               00
*
*hydro    ic    pressure       energy       quality
5600200   0         750.30000 498.08000 1115.7000 .99950000
$*=*=*=*=*=*=*=*=*=*=*=*=*=*=*=*=*=*=*=*=*=*=*=*=*=*=*=*=*=*=*=*=*=*=*=*=*=*=*=*=***
$ check valve                                                           $
*-----------------------------------------------------------------------*
*hydro            component name      component type
5650000              "mslv a1"            valve
*-----------------------------------------------------------------------*
*hydro    from          to           area      f loss    r loss    vcahs
5650101   560010000     800000000    3.0940     1.8176    1.8176   00100
*         junc dia   beta     c     m
5650110   0.0       0.       1.    1.
*
*hydro    vel/flw       f flowrate     g flowrate     j flowrate
5650201   0         105.90000 182.46000 0.0
*
*hydro                  valve type
5650300                    chkvlv
*
*hydro    chkvlv type  init. posn  back press  leak ratio
5650301        0           0         0.0         0.0
$*=*=*=*=*=*=*=*=*=*=*=*=*=*=*=*=*=*=*=*=*=*=*=*=*=*=*=*=*=*=*=*=*=*=*=*=*=*=*=*=***
$steam generator a safety valve                                         $
*-----------------------------------------------------------------------*
*hydro            component name      component type
```

```
5700000          "sfty vlv"          valve
*----------------------------------------------------------------------*
*hydro    from          to          area      f loss    r loss    vcahs
5700101   550010000     575000000   0.3756    0.0       0.0       00100
*         junc dia   beta     c     m
5700110   0.0        0.       1.    1.
*
*hydro    vel/flw       f flowrate     g flowrate     j flowrate
5700201   0         .00000000 .00000000 0.0
*
*hydro                  valve type
5700300                   srvvlv
*
*hydro     cntrlvar   table no.
5700301      556          0
$*=*=*=
```

```
*hydro     cntrlvar   table no.
5800301      852         0
*
$*=*=*=
```

```
*hydro          area            length          volume
6100101         1.0596          0.0             188.6088
*
*hydro        horz angle        vert angle        delta z
6100102         0.0             0.0             0.0
*
*hydro        roughness         hyd diam          fe
6100103         0.00015         1.1615          00
*
*hydro   ic   pressure      energy      quality
6100200  0       842.88000 417.50000 1114.2000 .00000000
$*=*=*=*=*=*=*=*=*=*=*=*=*=*=*=*=*=*=*=*=*=*=*=*=*=*=*=*=*=*=*=*=*=*=*=*=*=*=*=*=*=*=***
*hydro          component name     component type
6150000           "chkvlv b"          valve
*-----------------------------------------------------------------------*
*hydro   from         to          area     f loss   r loss   vcahs
6150101  610010000    620000000   1.0596   7.5365   7.5365   00000
*        junc dia  beta    c    m
6150110  0.0       0.      1.   1.
*
*hydro   vel/flw      f flowrate    g flowrate    j flowrate
6150201  0        17.007000 17.007000 0.0
*
*hydro              valve type
6150300               chkvlv
*
*hydro   chkvlv type  init. posn  back press  leak ratio
6150301       0          0          0          0
$*=*=*=*=*=*=*=*=*=*=*=*=*=*=*=*=*=*=*=*=*=*=*=*=*=*=*=*=*=*=*=*=*=*=*=*=*=*=*=*=*=*=***
*hydro          component name     component type
6200000           "maux ln "          snglvol
*-----------------------------------------------------------------------*
*hydro          area            length          volume
6200101         1.0596          0.0             92.4309
*
*hydro        horz angle        vert angle        delta z
6200102         0.0             0.0             0.0
*
*hydro        roughness         hyd diam          fe
6200103         0.00015         1.1615          00
*
*hydro   ic   pressure      energy      quality
6200200  0       828.27000 417.51000 1114.5000 .00000000
$*=*=*=*=*=*=*=*=*=*=*=*=*=*=*=*=*=*=*=*=*=*=*=*=*=*=*=*=*=*=*=*=*=*=*=*=*=*=*=*=*=*=***
$junction connecting mfw line b to steam generator b                $
$model as a trip valve                                              $
*-----------------------------------------------------------------------*
*hydro          component name     component type
6250000           "jun fw b"          valve
*-----------------------------------------------------------------------*
```

```
*hydro    from          to           area      f loss    r loss    vcahs
6250101   620010000     358000000    0.7175   11.3909   11.3909    00100
*         junc dia   beta     c     m
6250110   0.0        0.       1.    1.
*
*hydro    vel/flw       f flowrate     g flowrate     j flowrate
6250201   0         17.009000 17.154000 0.0
*
*hydro                  valve type
6250300                    trpvlv
*
*hydro                   trip no.
6250301                     709
$*=*=*=*=*=*=*=*=*=*=*=*=*=*=*=*=*=*=*=*=*=*=*=*=*=*=*=*=*=*=*=*=*=*=*=*=*=*=***
$steam driven auxfeed water line for sgb                                    *
$*=*=*=*=*=*=*=*=*=*=*=*=*=*=*=*=*=*=*=*=*=*=*=*=*=*=*=*=*=*=*=*=*=*=*=*=*=*=***
*hydro             component name      component type
6300000              "s aux b"             valve
*-----------------------------------------------------------------------*
*hydro    from          to           area      f loss    r loss    vcahs
6300101   532010000     610000000    0.0799     5.593     5.593    00000
*         junc dia   beta     c     m
6300110   0.0        0.       1.    1.
*
*hydro    vel/flw       f velocity     g velocity     j velocity
6300201   0         .00100254 .00100254 0.0
*
*hydro                  valve type
6300300                    chkvlv
*
*hydro    chkvlv type  init. posn  back press  leak ratio
6300301        0           0          0.0         0.0
$*=*=*=*=*=*=*=*=*=*=*=*=*=*=*=*=*=*=*=*=*=*=*=*=*=*=*=*=*=*=*=*=*=*=*=*=*=*=***
$motor driven auxfeed line b                                                $
*-----------------------------------------------------------------------*
*hydro             component name      component type
6400000              "mtr aux "            valve
*-----------------------------------------------------------------------*
*hydro    from          to           area      f loss    r loss    vcahs
6400101   542010000     620000000    0.0799     15.44     15.44    00000
*         junc dia   beta     c     m
6400110   0.0        0.       1.    1.
*
*hydro    vel/flw       f flowrate     g flowrate     j flowrate
6400201   0         .00000000 .00000000 0.0
*
*hydro                  valve type
6400300                    chkvlv
*
*hydro    chkvlv type  init. posn  back press  leak ratio
```

```
6400301       0          0         0.0        0.0
$*=*=*=*=*=*=*=*=*=*=*=*=*=*=*=*=*=*=*=*=*=*=*=*=*=*=*=*=*=*=*=*=*=*=*=*=*=*=*=***
$main steam line b - from steam generator b to steam header - includes $
$msiv,safety valves,and porv's associated with steam line b            $
*-----------------------------------------------------------------------*
*hydro            component name      component type
6500000             "mslp b1"           snglvol
*-----------------------------------------------------------------------*
*hydro           area              length             volume
6500101          3.0940            188.1638             0.0
*
*hydro        horz angle         vert angle           delta z
6500102          0.0               0.0                 0.0
*
*hydro         roughness          hyd diam              fe
6500103          0.00015           1.9848               00
*
*hydro    ic    pressure       energy       quality
6500200   0        757.21000 499.30000 1115.8000 .99969000
$*=*=*=*=*=*=*=*=*=*=*=*=*=*=*=*=*=*=*=*=*=*=*=*=*=*=*=*=*=*=*=*=*=*=*=*=*=*=*=***
$main steam isolation valve b                                          $
*-----------------------------------------------------------------------*
*hydro            component name      component type
6550000              "msiv b"            valve
*-----------------------------------------------------------------------*
*hydro    from          to           area      f loss    r loss    vcahs
6550101   650010000     660000000    3.0940    0.08      0.08      00100
*         junc dia   beta     c     m
6550110   0.0        0.       1.    1.
*
*hydro    vel/flw       f flowrate     g flowrate     j flowrate
6550201   0         164.15000 181.63000 0.0
*
*hydro                 valve type
6550300                  mtrvlv
*
*hydro     open trip   close trip  change rate  init posn  table no.
6550301       663         662         0.2857       1.0         0
$*=*=*=*=*=*=*=*=*=*=*=*=*=*=*=*=*=*=*=*=*=*=*=*=*=*=*=*=*=*=*=*=*=*=*=*=*=*=*=***
$main steam line b from msiv to header tank                            $
*-----------------------------------------------------------------------*
*hydro            component name      component type
6600000             "mslp b2"           snglvol
*-----------------------------------------------------------------------*
*hydro           area              length             volume
6600101          3.0940            20.0                 0.0
*
*hydro        horz angle         vert angle           delta z
6600102          0.0               0.0                 0.0
*
```

```
*hydro        roughness        hyd diam          fe
6600103        0.00015          1.9848           00
*
*hydro   ic   pressure      energy      quality
6600200  0       750.37000 498.09000 1115.8000 .99949000
$*=*=*=
```

```
*hydro      horz angle  vert angle    delta z
6750102        0.0         0.0          0.0
*
*hydro       roughness   hyd diam       fe
6750103         0.0        0.0          10
*
*hydro   ic        trip no.       alpha vrc      numeric vrc
6750200  02
*
*hydro   time     pressure     quality
6750201 0.0       14.7         1.0
$*=*=*=*=*=*=*=*=*=*=*=*=*=*=*=*=*=*=*=*=*=*=*=*=*=*=*=*=*=*=*=*=*=*=*=*=*=*=*=*=*=*=*=*=***
*hydro              component name      component type
6800000                "porv b"             valve
*-----------------------------------------------------------------------*
*hydro    from          to           area      f loss    r loss    vcahs
6800101   650010000     685000000    0.0978952  0.0       0.0      00100
*         junc dia   beta     c     m
6800110   0.0        0.       1.    1.
*
*hydro    vel/flw       f flowrate     g flowrate     j flowrate
6800201   0         .00000000 .00000000 0.0
*
*hydro                 valve type
6800300                  srvvlv
*
*hydro      cntrlvar   table no.
6800301       854          0
*
$*=*=*=*=*=*=*=*=*=*=*=*=*=*=*=*=*=*=*=*=*=*=*=*=*=*=*=*=*=*=*=*=*=*=*=*=*=*=*=*=*=*=*=*=***
*hydro              component name      component type
6850000                "cond b"            tmdpvol
*-----------------------------------------------------------------------*
*hydro         area       length      volume
6850101        1.0e+06     0.0        1.0e+06
*
*hydro      horz angle  vert angle    delta z
6850102        0.0         0.0          0.0
*
*hydro       roughness   hyd diam       fe
6850103         0.0        0.0          10
*
*hydro   ic        trip no.       alpha vrc      numeric vrc
6850200  02
*
*hydro   time     pressure     quality
6850201 0.0       14.7         1.0
$*=*=*=*=*=*=*=*=*=*=*=*=*=*=*=*=*=*=*=*=*=*=*=*=*=*=*=*=*=*=*=*=*=*=*=*=*=*=*=*=*=*=*=*=***
$main feed line c from the mfw header to steam generator c              $
*-----------------------------------------------------------------------*
```

```
*hydro          component name      component type
7050000           "reg vlv "          valve
*----------------------------------------------------------------------*
*hydro    from         to          area      f loss    r loss    vcahs
7050101   878010000    710000000   1.0596    0.0       0.0       00000
*         junc dia   beta     c     m
7050110   0.0        0.       1.    1.
*
*hydro    vel/flw      f flowrate    g flowrate    j flowrate
7050201   0        16.957000 16.957000 0.0
*
*hydro              valve type
7050300               srvvlv
*
*hydro     cntrlvar   table no.
7050301      729         0
*
*hydro              area/posn    f csubv     r csubv
7050401                0.0        0.0         0.0
7050402                0.75      589.3943     0.0
7050403                1.0       982.3239     0.0
$*=*=*=
```

```
*
*hydro    chkvlv type  init. posn  back press  leak ratio
7150301        0          0          0          0
$*=*=*=
```

```
7300201   0         .00000000 .00000000 0.0
*
*hydro                valve type
7300300                 chkvlv
*
*hydro    chkvlv type  init. posn  back press  leak ratio
7300301        0           0          0.0         0.0
$*=*=*=
```

```
*----------------------------------------------------------------------*
*hydro    from          to           area      f loss    r loss    vcahs
7550101   750010000     760000000    3.0940    0.08      0.08      00100
*         junc dia   beta     c     m
7550110   0.0        0.       1.    1.
*
*hydro    vel/flw       f flowrate     g flowrate     j flowrate
7550201   0         164.59000 180.76000 0.0
*
*hydro                  valve type
7550300                    mtrvlv
*
*hydro     open trip   close trip  change rate  init posn  table no.
7550301       663         662         0.2857       1.0         0
$*=*=*=*=*=*=*=*=*=*=*=*=*=*=*=*=*=*=*=*=*=*=*=*=*=*=*=*=*=*=*=*=*=*=*=*=*=*=***
$main steam line c                                                    $
*----------------------------------------------------------------------*
*hydro             component name      component type
7600000              "mslp c2"            snglvol
*----------------------------------------------------------------------*
*hydro            area               length              volume
7600101           3.0940              20.0                0.0
*
*hydro         horz angle          vert angle            delta z
7600102           0.0                0.0                 0.0
*
*hydro          roughness           hyd diam               fe
7600103           0.00015            1.9848               00
*
*hydro    ic    pressure       energy       quality
7600200   0         750.31000 498.08000 1115.8000 .99949000
$*=*=*=*=*=*=*=*=*=*=*=*=*=*=*=*=*=*=*=*=*=*=*=*=*=*=*=*=*=*=*=*=*=*=*=*=*=*=***
$check valve                                                          $
*----------------------------------------------------------------------*
*hydro             component name      component type
7650000              "mslv c1"            valve
*----------------------------------------------------------------------*
*hydro    from          to           area      f loss    r loss    vcahs
7650101   760010000     800000000    3.0940     1.8176    1.8176   00100
*         junc dia   beta     c     m
7650110   0.0        0.       1.    1.
*
*hydro    vel/flw       f flowrate     g flowrate     j flowrate
7650201   0         106.11000 182.59000 0.0
*
*hydro                  valve type
7650300                    chkvlv
*
*hydro    chkvlv type  init. posn  back press  leak ratio
7650301        0           0          0.0         0.0
```

```
$*=*=*=*=*=*=*=*=*=*=*=*=*=*=*=*=*=*=*=*=*=*=*=*=*=*=*=*=*=*=*=*=*=*=*=*=*=*=*=***
$main steam line c safety valve and porv                          $
*-----------------------------------------------------------------*
*hydro          component name      component type
7700000           "sfty vlv"          valve
*-----------------------------------------------------------------*
*hydro    from          to          area      f loss    r loss    vcahs
7700101   750010000     775000000   0.3756    0.0       0.0       00100
*         junc dia   beta     c     m
7700110   0.0        0.       1.    1.
*
*hydro    vel/flw       f flowrate     g flowrate     j flowrate
7700201   0         .00000000 .00000000 0.0
*
*hydro                  valve type
7700300                   srvvlv
*
*hydro     cntrlvar   table no.
7700301      756          0
$*=*=*=*=*=*=*=*=*=*=*=*=*=*=*=*=*=*=*=*=*=*=*=*=*=*=*=*=*=*=*=*=*=*=*=*=*=*=*=***
*hydro          component name      component type
7750000            "atmos c"           tmdpvol
*-----------------------------------------------------------------*
*hydro        area       length      volume
7750101       1.0e+06      0.0        1.0e+06
*
*hydro     horz angle  vert angle    delta z
7750102       0.0         0.0          0.0
*
*hydro      roughness   hyd diam       fe
7750103        0.0        0.0          10
*
*hydro   ic        trip no.       alpha vrc      numeric vrc
7750200  02
*
*hydro   time     pressure     quality
7750201 0.0       14.7         1.0
$*=*=*=*=*=*=*=*=*=*=*=*=*=*=*=*=*=*=*=*=*=*=*=*=*=*=*=*=*=*=*=*=*=*=*=*=*=*=*=***
*hydro          component name      component type
7800000             "porv c"            valve
*-----------------------------------------------------------------*
*hydro    from          to          area      f loss    r loss    vcahs
7800101   750010000     785000000   0.0978952 0.0       0.0       00100
*         junc dia   beta     c     m
7800110   0.0        0.       1.    1.
*
*hydro    vel/flw       f flowrate     g flowrate     j flowrate
7800201   0         .00000000 .00000000 0.0
*
*hydro                  valve type
```

```
7800300                 srvvlv
*
*hydro      cntrlvar   table no.
7800301       856          0
*
$*=*=*=*=*=*=*=*=*=*=*=*=*=*=*=*=*=*=*=*=*=*=*=*=*=*=*=*=*=*=*=*=*=*=*=*=*=*=***
*hydro            component name      component type
7850000              "cond c"            tmdpvol
*-----------------------------------------------------------------------*
*hydro         area       length      volume
7850101        1.0e+06     0.0        1.0e+06
*
*hydro      horz angle  vert angle    delta z
7850102        0.0         0.0          0.0
*
*hydro       roughness   hyd diam       fe
7850103         0.0        0.0          10
*
*hydro   ic        trip no.       alpha vrc      numeric vrc
7850200  02
*
*hydro   time     pressure     quality
7850201 0.0       14.7         1.0
$*=*=*=*=*=*=*=*=*=*=*=*=*=*=*=*=*=*=*=*=*=*=*=*=*=*=*=*=*=*=*=*=*=*=*=*=*=*=***
$steam header tank                                                    $
*-----------------------------------------------------------------------*
*hydro            component name      component type
8000000              "stm  hdr"           branch
*-----------------------------------------------------------------------*
*hydro           no. juns            vel/flw
8000001   1         0
*
*hydro           area               length              volume
8000101         24.1196              0.0               361.7945
*
*hydro         horz angle          vert angle           delta z
8000102          0.0                0.0                 0.0
*
*hydro          roughness           hyd diam               fe
8000103          0.00015            5.5417                00
*
*hydro    ic    pressure       energy       quality
8000200   0         741.95000 496.59000 1116.1000 .99961000
*
*hydro    from          to           area      f loss    r loss    vcahs
8001101   800010000     802000000    9.5252     0.0       0.0      00100
*         junc dia   beta     c     m
8001110   0.0        0.       1.    1.
*
*
```

```
*hydro                  f flowrate     g flowrate     j flowrate
8001201   160.37000 179.99000 0.0
$*=*=*=*=*=*=*=*=*=*=*=*=*=*=*=*=*=*=*=*=*=*=*=*=*=*=*=*=*=*=*=*=*=*=*=*=*=*=*=*=***
$main steam line from turbine header to turbine stop valves            $
$                                                                      $
*----------------------------------------------------------------------*
*hydro            component name      component type
8020000              "mslp "             snglvol
*----------------------------------------------------------------------*
*hydro           area              length             volume
8020101          9.5252              0.0              1222.6590
*
*hydro         horz angle          vert angle            delta z
8020102          0.0                0.0                 0.0
*
*hydro          roughness           hyd diam               fe
8020103          0.00015            2.4625                00
*
*hydro    ic    pressure       energy       quality
8020200   0         733.44000 495.06000 1116.3000 .99925000
$*=*=*=*=*=*=*=*=*=*=*=*=*=*=*=*=*=*=*=*=*=*=*=*=*=*=*=*=*=*=*=*=*=*=*=*=*=*=*=*=***
*hydro            component name      component type
8040000             "trbn stp"           valve
*----------------------------------------------------------------------*
*hydro    from          to           area      f loss    r loss    vcahs
8040101   802010000     806000000    9.5252     0.0       0.0      00000
8040101   802010000     806000000    7.0720     0.0       0.0      00000
*         junc dia   beta     c     m
8040110   0.0        0.       1.    1.
*
*hydro    vel/flw       f flowrate     g flowrate     j flowrate
8040201   0         130.13000 245.36000 0.0
*
*hydro                 valve type
8040300                  srvvlv
*
*hydro      cntrlvar   table no.
8040301       924          0
*
*hydro                 area/posn    f csubv     r csubv
8040401                  0.0          0.         0.0
8040402                  1.0      8719.4543      0.0
8040402                  1.0      8963.1329      0.0
8040402                  1.0      9120.2118      0.0
8040402                  1.0      9594.3351      0.0
8040402                  1.0      9357.2735      0.0
$*=*=*=*=*=*=*=*=*=*=*=*=*=*=*=*=*=*=*=*=*=*=*=*=*=*=*=*=*=*=*=*=*=*=*=*=*=*=*=*=***
*hydro            component name      component type
8060000              "trbn n"            tmdpvol
*----------------------------------------------------------------------*
```

```
*hydro        area      length     volume
8060101       1.0e+06     0.0       1.0e+06
*
*hydro     horz angle  vert angle   delta z
8060102       0.0        0.0         0.0
*
*hydro      roughness   hyd diam      fe
8060103        0.0       0.0         10
*
*hydro   ic       trip no.      alpha vrc     numeric vrc
*8060200  02          0        cntrlvar          939
8060200  02
*
*hydro   norm a   pressure    quality
*8060201  15.0     15.0        0.9975
*8060202  553.00   553.0       0.9975
 8060202     0.0   553.0       0.9975
$*=*=*=*=*=*=*=*=*=*=*=*=*=*=*=*=*=*=*=*=*=*=*=*=*=*=*=*=*=*=*=*=*=*=*=*=*=*=*=***
$main steam line steam dump system                                  $
*-----------------------------------------------------------------------*
*hydro            component name      component type
8080000             "stm dmp "            valve
*-----------------------------------------------------------------------*
*hydro    from          to          area      f loss    r loss    vcahs
8080101   802010000     810000000    0.68206    0.0       0.0      00100
*        junc dia   beta     c     m
8080110   0.0        0.       1.    1.
*
*hydro    vel/flw       f flowrate     g flowrate     j flowrate
8080201   0         .00000000 .00000000 0.0
*
*hydro                valve type
8080300                 srvvlv
*
*hydro     cntrlvar   table no.
8080301       850        808
*
$*=*=*=*=*=*=*=*=*=*=*=*=*=*=*=*=*=*=*=*=*=*=*=*=*=*=*=*=*=*=*=*=*=*=*=*=*=*=*=***
*hydro            component name      component type
8100000               "cond n"           tmdpvol
*-----------------------------------------------------------------------*
*hydro        area      length     volume
8100101       1.0e+06     0.0       1.0e+06
*
*hydro     horz angle  vert angle   delta z
8100102       0.0        0.0         0.0
*
*hydro      roughness   hyd diam      fe
8100103        0.0       0.0         10
*
```

```
*hydro   ic        trip no.       alpha vrc      numeric vrc
8100200  02
*
*hydro   time     pressure     quality
8100201 0.0       1.5          1.0
*
$*=*=*=*=*=*=*=*=*=*=*=*=*=*=*=*=*=*=*=*=*=*=*=*=*=*=*=*=*=*=*=*=*=*=*=*=*=*=***
$condensate and main feedwater piping - from the hotwell to the main   $
$feedwater header. condensate piping includes the hotwell,condensate   $
$pumps,lp heaters,heater drain pumps,lp heater bypass,and mfw pump     $
$suction header. feedwater piping includes the mfw pumps,hp heaters,   $
$and the main feedwater header.                                        $
*-----------------------------------------------------------------------*
$condenser hotwell                                                     $
*-----------------------------------------------------------------------*
*hydro            component name      component type
8220000             "hotwell"           tmdpvol
*-----------------------------------------------------------------------*
*hydro         area       length      volume
8220101        9.333        0.0        1.0e+06
*
*hydro      horz angle   vert angle    delta z
8220102        0.0         0.0          0.0
*
*hydro       roughness   hyd diam       fe
8220103         0.0        0.0          10
*
*hydro   ic        trip no.       alpha vrc      numeric vrc
8220200  02
*
*hydro   time     pressure     quality
8220201 0.0       1.5          0.0
$*=*=*=*=*=*=*=*=*=*=*=*=*=*=*=*=*=*=*=*=*=*=*=*=*=*=*=*=*=*=*=*=*=*=*=*=*=*=***
$condensate pump - combines pump a and pump b                          $
*-----------------------------------------------------------------------*
*hydro            component name      component type
8240000             "cond pmp"            pump
*-----------------------------------------------------------------------*
*hydro           area               length              volume
8240101          2.4053               11.5                0.0
*
*hydro         horz angle          vert angle            delta z
8240102          0.0                 0.0                  0.0
*
*hydro         equil flag
8240103           0
*
*hydro       from       jun area     f loss      r loss      vcahs
8240108      822000000   9.333        0.0         0.0        00000
*
```

```
*hydro        to        jun area     f loss      r loss      vcahs
8240109      826000000   2.4053       0.0         0.0         00000
*         junc dia   beta     c     m
8240110   0.0        0.       1.    1.
8240111   0.0        0.       1.    1.
*
*hydro    ic    pressure       energy       quality
8240200   0         268.54000 70.437000 1116.4000 .00000000
$*=*=*=
```

```
8241205      0.8000       0.5041
8241206      0.8728       0.6876
8241207      0.9699       0.9052
8241208      1.0000       1.0000
*
*hydro     curve type      regime
8241300       1            3
*
*hydro       v/a          head       $dissipation (-q,+n)
8241301     -1.0000        1.2360
8241303      0.0          1.3982
*
*hydro     curve type      regime
8241400       1            4
*
*hydro       a/v          head       $dissipation (-q,+n)
8241401     -1.0           1.2360
8241402      0.0          0.7500
*
*hydro     curve type      regime
8241500       1            5
*
*hydro       v/a          head       $dissipation (-q,+n)
8241501      0.0           1.0
8241503      1.0           2.0
*
*hydro     curve type      regime
8241600       1            6
*
*hydro       a/v          head
8241601      0.0           0.75
8241602      1.0           2.0
*
*hydro     curve type      regime
8241700       1            7
*
*hydro       v/a          head
8241701     -1.0           0.20
8241703      0.0           1.00
*
*hydro     curve type      regime
8241800       1            8
*
*hydro       a/v          head
8241801     -1.0           0.20
8241802      0.0          -0.30
*
*hydro     curve type      regime
8241900       2            1
*
```

```
*hydro      v/a         torque      $normal     (+q,+n)
8241901     0.0         0.7857
8241902     0.1042      0.7698
8241903     0.2083      0.7651
8241904     0.3125      0.7651
8241905     0.4167      0.7778
8241906     0.5208      0.8016
8241907     0.6250      0.8333
8241908     0.7292      0.9048
8241909     0.8333      0.9683
8241910     0.9375      0.9921
8241911     1.0000      1.0000
*
*hydro      curve type  regime
8242000     2           2
*
*hydro      a/v         torque      $normal     (+q,+n)
8242001     0.0000      -0.1500
8242002     0.5000      0.2500
8242003     0.6250      0.3910
8242004     0.7140      0.5100
8242005     0.8000      0.6502
8242006     0.8728      0.7798
8242007     0.9600      0.9288
8242008     1.0000      1.0000
*
*hydro      curve type  regime
8242100     2           3
*
*hydro      v/a         torque      $dissipation (-q,+n)
8242101     -1.0        0.7
8242102     0.0         0.7857
*
*hydro      curve type  regime
8242200     2           4
*
*hydro      a/v         torque      $dissipation (-q,+n)
8242201     -1.0        0.7
8242202     0.0         0.30
*
*
*hydro      curve type  regime
8242300     2           5
*
*hydro      v/a         torque
8242301     0.0         -0.60
8242302     1.0         -0.20
*
*hydro      curve type  regime
8242400     2           6
```

```
*
*hydro        a/v            torque
8242401       0.0            0.30
8242402       1.0           -0.20
*
*hydro      curve type        regime
8242500        2               7
*
*hydro        v/a            torque
8242501      -1.0           -1.40
8242502       0.0           -0.60
*
*hydro      curve type        regime
8242600        2               8
*
*hydro        a/v            torque
8242601      -1.0           -1.40
8242602       0.0           -0.15
*
$*=*=*=*=*=*=*=*=*=*=*=*=*=*=*=*=*=*=*=*=*=*=*=*=*=*=*=*=*=*=*=*=*=*=*=*=*=*=*=*=*=***
$condensate pump discharge piping to l.p. heater 1                    $
*-----------------------------------------------------------------------*
*hydro            component name      component type
8260000             "cond dis"          snglvol
*-----------------------------------------------------------------------*
*hydro            area              length             volume
8260101          2.4053              0.0              279.1433
*
*hydro         horz angle          vert angle           delta z
8260102          0.0                0.0                 0.0
*
*hydro          roughness           hyd diam              fe
8260103          0.00015             1.75                 00
*
*hydro    ic    pressure       energy       quality
8260200   0        537.48000 70.440000 1118.7000 .00000000
$*=*=*=*=*=*=*=*=*=*=*=*=*=*=*=*=*=*=*=*=*=*=*=*=*=*=*=*=*=*=*=*=*=*=*=*=*=*=*=*=*=***
$junction connecting condensate pump discharge piping to l.p. heater 1 $
*-----------------------------------------------------------------------*
*hydro            component name      component type
8280000             "jun c1"              valve
*-----------------------------------------------------------------------*
*hydro    from          to           area      f loss    r loss    vcahs
8280101   826010000     830000000    2.4053    32.4193   32.4193   00100
*         junc dia   beta     c     m
8280110   0.0        0.       1.    1.
*
*hydro    vel/flw       f flowrate     g flowrate     j flowrate
8280201   0         13.577000 13.577000 0.0
*
```

```
*hydro                valve type
8280300                 chkvlv
*
*hydro    chkvlv type  init. posn  back press  leak ratio
8280301        0           0           0           0
*
$*=*=*=*=*=*=*=*=*=*=*=*=*=*=*=*=*=*=*=*=*=*=*=*=*=*=*=*=*=*=*=*=*=*=*=*=*=*=***
$l.p. heaters 1 and 2 - this component represents l.p. heaters 1a,1b,  $
$                     2a,and 2b. volume 1 is the 1a and 1b heaters.  $
$                     volume 2 is the 2a and 2b heaters.            $
*-----------------------------------------------------------------------*
*hydro            component name      component type
8300000             "htrs 1&2"            pipe
*-----------------------------------------------------------------------*
*hydro       no. volumes
8300001          2
*
*hydro         vol area                                  vol
8300101         4.3474                                     1
8300102         3.3341                                     2
*
*hydro         jun area                                  jun
8300201         3.3341                                     1
*
*hydro          length                                   vol
8300301          0.0                                      2
*
*hydro          volume                                    vol
8300401        388.1559                                     1
8300402        242.2777                                     2
*
*hydro        vert angle                                  vol
8300601          0.0                                      2
*
*hydro        roughness     hyd diam                        vol
8300801         0.000005     0.0439                          1
8300802         0.000005     0.0543                          2
*
*hydro            fe                                     vol
8301001           00                                       2
*
*hydro         fvcahs                                    jun
8301101        000100                                       1
*
*hydro    ic    pressure       energy       quality                vol
8301201   0        488.28000 135.09000 1118.8000 .00000000 0.0       01
8301202   0        469.88000 169.61000 1118.9000 .00000000 0.0       02
*
*hydro         vel/flw
8301300   0
```

```
*
*hydro        f flowrate   g flowrate    j flowrate              jun
8301301   9.9762000 9.9762000 0.0       01
*        junc dia   beta     c     m
8301401   0.0       0.       1.    1.    1
$*=*=*=*=*=*=*=*=*=*=*=*=*=*=*=*=*=*=*=*=*=*=*=*=*=*=*=*=*=*=*=*=*=*=*=*=*=*=*=*=*=*=***
$junction connecting l.p. heater 2 outlet to piping between heaters 2&3$
*-----------------------------------------------------------------------*
*hydro            component name      component type
8320000              "jun c2"           sngljun
*-----------------------------------------------------------------------*
*hydro    from          to          area      f loss    r loss    vcahs
8320101   830010000     834000000    2.5368     4.4815    4.4815   00100
*
*       jn.dia     beta     c     m
8320110   0.827      0.0     1.    1.
*
*hydro    vel/flw       f flowrate     g flowrate     j flowrate
8320201   0         13.281000 13.281000 0.0
$*=*=*=*=*=*=*=*=*=*=*=*=*=*=*=*=*=*=*=*=*=*=*=*=*=*=*=*=*=*=*=*=*=*=*=*=*=*=*=*=*=*=***
$piping connecting l.p. heaters 2 and 3                                $
*-----------------------------------------------------------------------*
*hydro            component name      component type
8340000             "htr2to3"         snglvol
*-----------------------------------------------------------------------*
*hydro           area              length              volume
8340101          2.5368              0.0              420.5482
*
*hydro        horz angle          vert angle           delta z
8340102          0.0                0.0                0.0
*
*hydro         roughness           hyd diam              fe
8340103          0.00015            1.2717               00
*
*hydro    ic    pressure       energy       quality
8340200   0         454.23000 169.64000 1118.9000 .00000000
$*=*=*=*=*=*=*=*=*=*=*=*=*=*=*=*=*=*=*=*=*=*=*=*=*=*=*=*=*=*=*=*=*=*=*=*=*=*=*=*=*=*=***
$junction connecting the polishers to l.p. heater 3                    $
*-----------------------------------------------------------------------*
*hydro            component name      component type
8360000              "jun c3"           sngljun
*-----------------------------------------------------------------------*
*hydro    from          to          area      f loss    r loss    vcahs
8360101   834010000     840000000    2.5368     0.0       0.0      00100
*
*       jn.dia     beta     c     m
8360110   0.627      0.0     1.    1.
*
*hydro    vel/flw       f flowrate     g flowrate     j flowrate
8360201   0         13.282000 13.282000 0.0
```

```
$*=*=*=*=*=*=*=*=*=*=*=*=*=*=*=*=*=*=*=*=*=*=*=*=*=*=*=*=*=*=*=*=*=*=*=*=*=*=*=***
$l.p. heaters 3,4,and 5 and piping between l.p. heater 5 and the mfw   $
$pump suction header. the heaters are combine as in the l.p. heaters   $
$1 and 2. volume 1 represents 3a and 3b heaters,volume 2 represents 4a $
$and 4b heaters,volume 3 represents 5a and 5b heaters,and volume 4     $
$represents the piping between l.p. heaters 5 and the mfw pump suction $
$header                                                                $
*----------------------------------------------------------------------*
*hydro          component name      component type
8400000            "lp htrs"            pipe
*----------------------------------------------------------------------*
*hydro      no. volumes
8400001         4
*
*hydro        vol area                                vol
8400101        3.8574                                  1
8400102        3.4593                                  2
8400103        3.5984                                  3
8400104        2.4053                                  4
*
*hydro         length                                 vol
8400301         0.0                                   4
*
*hydro         volume                                  vol
8400401        466.7622                                 1
8400402        328.0331                                 2
8400403        237.4971                                 3
8400404        276.6769                                 4
*
*hydro       vert angle                                vol
8400601         0.0                                   4
*
*hydro       roughness      hyd diam                        vol
8400801        0.000005      0.0463                          1
8400802        0.000005      0.0543                          3
8400803        0.00015       0.8750                          4
*
*hydro         f loss        r loss                        jun
8400901        0.0           0.0                            2
8400902        4.0           4.0                            3
*
*hydro          fe                                       vol
8401001          00                                       4
*
*hydro         vcahs                                     jun
8401101        00100                                       3
*
*hydro   ic   pressure      energy      quality              vol
8401201  0       440.57000 224.19000 1118.8000 .00000000 0.0      01
8401202  0       416.34000 277.71000 1118.7000 .00000000 0.0      02
```

```
8401203   0         398.91000 341.29000 1118.6000 .00000000 0.0       03
8401204   0         384.33000 341.32000 1118.5000 .00000000 0.0       04
*
*hydro          vel/flw
8401300   0
*
*hydro         f flowrate   g flowrate    j flowrate                jun
8401301   9.9770000 9.9770000 0.0       01
8401302   10.259000 10.259000 0.0       02
8401303   15.339000 15.339000 0.0       03
*
*       jn.dia     beta     c     m   jn.
8401401   0.627      0.0     1.    1.   3
$*=*=*=*=*=*=*=*=*=*=*=*=*=*=*=*=*=*=*=*=*=*=*=*=*=*=*=*=*=*=*=*=*=*=*=*=*=*=*=*=*=*=***
$junction connecting l.p. heater 5 outlet piping to mfw pump suction   $
$header                                                          $
*-----------------------------------------------------------------------*
*hydro             component name      component type
8420000               "jun c4"            sngljun
*-----------------------------------------------------------------------*
*hydro    from          to           area      f loss    r loss    vcahs
8420101   840010000     854000000    2.4053     0.0       0.0      00100
*
*       jn.dia     beta     c     m
8420110   2.348      0.0     1.    1.
*
*hydro    vel/flw       f flowrate     g flowrate     j flowrate
8420201   0         15.340000 15.340000 0.0
$*=*=*=*=*=*=*=*=*=*=*=*=*=*=*=*=*=*=*=*=*=*=*=*=*=*=*=*=*=*=*=*=*=*=*=*=*=*=*=*=*=*=***
$l.p. heater bypass valve (hcv-1459)                             $
*-----------------------------------------------------------------------*
*hydro             component name      component type
8440000              "hcv-1459"           valve
*-----------------------------------------------------------------------*
*hydro    from          to           area      f loss    r loss    vcahs
8440101   826010000     854000000    0.3474   177.4948  177.4948   00100
*
*       jn.dia     beta     c     m
8440110   1.891      0.0     1.    1.
*
*hydro    vel/flw       f flowrate     g flowrate     j flowrate
8440201   0         .00000000 .00000000 0.0
*
*hydro                valve type
8440300                 trpvlv
*
*hydro                 trip no.
8440301                  609
*
$*=*=*=*=*=*=*=*=*=*=*=*=*=*=*=*=*=*=*=*=*=*=*=*=*=*=*=*=*=*=*=*=*=*=*=*=*=*=*=*=*=*=***
```

```
$heater drain system - drain pumps modeled as time dependent volume and$
$                    junction. drain pumps provide approximately 28% $
$                    of total feed flow.                             $
*----------------------------------------------------------------------*
*hydro            component name      component type
8500000             "drainpmp"          tmdpvol
*----------------------------------------------------------------------*
*hydro         area       length      volume
8500101       0.9575       0.0        1.0e+06
*
*hydro      horz angle  vert angle    delta z
8500102        0.0         0.0          0.0
*
*hydro       roughness   hyd diam       fe
8500103         0.0        0.0          10
*
*hydro   ic        trip no.       alpha vrc      numeric vrc
8500200  01
*
*hydro   time     eq. temp     quality
8500201 0.0       379.6550     0.0
$*=*=*=*=*=*=*=*=*=*=*=*=*=*=*=*=*=*=*=*=*=*=*=*=*=*=*=*=*=*=*=*=*=*=*=*=*=***
*hydro            component name      component type
8520000             "drainflw"          tmdpjun
*----------------------------------------------------------------------*
*hydro    from          to             area
8520101   850000000     854000000      0.9575
*
*hydro    vel/flw       trip no.       alpha vrc      numeric vrc
8520200      1            698
*
*hydro   time           f flowrate     g flowrate     j flowrate
8520201  -1.0               0.0            0.0            0
8520202   0.0             783.2197        0.0            0
$*=*=*=*=*=*=*=*=*=*=*=*=*=*=*=*=*=*=*=*=*=*=*=*=*=*=*=*=*=*=*=*=*=*=*=*=*=***
$main feedwater pump suction header tank                            $
*----------------------------------------------------------------------*
*hydro            component name      component type
8540000             "pmp hdr"           snglvol
*----------------------------------------------------------------------*
*hydro           area              length             volume
8540101          4.4969              0.0               78.6960
*
*hydro         horz angle          vert angle           delta z
8540102          0.0                 0.0                 0.0
*
*hydro          roughness           hyd diam               fe
8540103          0.00015             2.3928               00
*
*hydro    ic    pressure       energy       quality
```

```
8540200   0        383.50000 344.46000 1118.5000 .00000000
$*=*=*=*=*=*=*=*=*=*=*=*=*=*=*=*=*=*=*=*=*=*=*=*=*=*=*=*=*=*=*=*=*=*=*=*=*=***
*----------------------------------------------------------------------*
$junction connecting the mfw pump suction header to the mfw pump       $
$suction piping                                                        $
*----------------------------------------------------------------------*
*hydro            component name      component type
8560000             "jun fw1"           sngljun
*----------------------------------------------------------------------*
*hydro    from          to          area      f loss    r loss    vcahs
8560101   854010000     860000000   3.9379    0.0       0.0       00100
*
*       jn.dia     beta     c     m
8560110   1.726      0.0      1.    1.
*
*hydro    vel/flw       f flowrate     g flowrate     j flowrate
8560201   0         13.018000 13.018000 0.0
$*=*=*=*=*=*=*=*=*=*=*=*=*=*=*=*=*=*=*=*=*=*=*=*=*=*=*=*=*=*=*=*=*=*=*=*=*=***
$mfw pump suction pipe                                                 $
*----------------------------------------------------------------------*
*hydro            component name      component type
8600000             "pmp sctn"          snglvol
*----------------------------------------------------------------------*
*hydro           area              length            volume
8600101          3.9379            0.0               368.6858
*
*hydro        horz angle         vert angle          delta z
8600102          0.0               0.0               0.0
*
*hydro         roughness          hyd diam            fe
8600103          0.00015           1.5833            00
*
*hydro    ic    pressure       energy       quality
8600200   0         382.97000 344.46000 1118.5000 .00000000
$*=*=*=*=*=*=*=*=*=*=*=*=*=*=*=*=*=*=*=*=*=*=*=*=*=*=*=*=*=*=*=*=*=*=*=*=*=***
$main feedwater pump a                                                 $
*----------------------------------------------------------------------*
*hydro            component name      component type
8610000             "mfw pmpa"          pump
*----------------------------------------------------------------------*
*hydro           area              length            volume
8610101          2.5802            10.4532           0.0
*
*hydro        horz angle         vert angle          delta z
8610102          0.0               0.0               0.0
*
*hydro        equil flag
8610103          00
*
*hydro       from       jun area     f loss      r loss      vcahs
```

```
8610108      860010000   1.9690       0.0         0.0        00000
*
*hydro        to        jun area     f loss      r loss      vcahs
8610109      862000000   1.6585       0.0         0.0        00000
*
*       jn.dia     beta     c     m
8610110   0.0        0.0     1.    1.
8610111   0.0        0.0     1.    1.
*
*hydro    ic    pressure       energy       quality
8610200   0         715.73000 344.60000 1116.7000 .00000000
$*=*=*=*=*=*=*=*=*=*=*=*=*=*=*=*=*=*=*=*=*=*=*=*=*=*=*=*=*=*=*=*=*=*=*=*=*=*=***
*hydro    vel/flw     f flowrate       g flowrate     j flowrate
8610201   0         13.017000 13.017000 0.0
*-----------------------------------------------------------------------*
*hydro    vel/flw     f flowrate       g flowrate     j flowrate
8610202   0         15.434000 15.434000 0.0
*-----------------------------------------------------------------------*
*hydro      ptdi   2fazi   diff i   tork i   pvel i   trip no.   rvrs i
8610301     0   -1   -3        -1        -1       628         0
8610302   3570.0000 1.0000000 12690.000 1665.0000 8017.9318 1843.0000
8610303   62.400000 .00000000 .00000000 80.180000 8.0180000 .00000000
*-----------------------------------------------------------------------*
*hydro   rated pump vel.   init/rated vel.   rated flow    rated head
*
*hydro    rated torque     mom of inertia    rated dens    mtr torque
*
*hydro     coeff. tf2        coeff. tf0      coeff. tf1    coeff. tf3
*
*hydro       curve type          regime
8611100          1                 1
*
*hydro          v/a              head          $normal      (+q,+n)
8611101         0.0              1.2492
8611102         0.0394           1.2372
8611103         0.0788           1.2252
8611104         0.1576           1.2012
8611105         0.2364           1.1832
8611106         0.3152           1.1652
8611107         0.3940           1.1562
8611108         0.4728           1.1502
8611109         0.5516           1.1411
8611110         0.6304           1.1291
8611111         0.7092           1.1111
8611112         0.7880           1.0931
8611113         0.8668           1.0631
8611114         0.9456           1.0330
8611115         1.0000           1.0000
*
*hydro       curve type          regime
```

```
8611200      1          2
*
*hydro       a/v        head       $normal     (+q,+n)
8611201      0.0000     -0.3000
8611202      0.5000     0.0000
8611203      0.6250     0.2860
8611204      0.7140     0.4220
8611205      0.7931     0.4912
8611206      0.8460     0.6191
8611207      0.9065     0.7649
8611208      0.9762     0.9386
8611209      1.0000     1.0000
*
*hydro     curve type     regime
8611300      1          3
*
*hydro       v/a        head       $dissipation (-q,+n)
8611301      -1.0000    1.2360
8611303      0.0        1.2492
*
*hydro     curve type     regime
8611400      1          4
*
*hydro       a/v        head       $dissipation (-q,+n)
8611401      -1.0       1.2360
8611402      0.0        0.7500
*
*hydro     curve type     regime
8611500      1          5
*
*hydro       v/a        head       $dissipation (-q,+n)
8611501      0.0        1.0
8611503      1.0        2.0
*
*hydro     curve type     regime
8611600      1          6
*
*hydro       a/v        head
8611601      0.0        0.75
8611602      1.0        2.0
*
*hydro     curve type     regime
8611700      1          7
*
*hydro       v/a        head
8611701      -1.0       0.20
8611703      0.0        1.00
*
*hydro     curve type     regime
8611800      1          8
```

```
*
*hydro        a/v          head
8611801       -1.0          0.20
8611802        0.0         -0.30
*
*hydro      curve type       regime
8611900        2              1
*
*hydro        v/a          torque      $normal      (+q,+n)
8611901        0.0          0.5321
8611902        0.0394       0.5138
8611903        0.0788       0.5138
8611904        0.1576       0.5321
8611905        0.2364       0.5688
8611906        0.3152       0.6239
8611907        0.3940       0.6697
8611908        0.4728       0.7248
8611909        0.5516       0.7798
8611910        0.6304       0.8257
8611911        0.7092       0.8807
8611912        0.7880       0.9174
8611913        0.8668       0.9541
8611914        0.9456       0.9908
8611915        1.0000       1.0000
*
*hydro      curve type       regime
8612000        2              2
*
*hydro        a/v          torque      $normal      (+q,+n)
8612001        0.0000      -0.1500
8612002        0.5000       0.2500
8612003        0.6250       0.3910
8612004        0.7140       0.5100
8612005        0.7931       0.6580
8612006        0.8460       0.7420
8612007        0.9065       0.8443
8612008        0.9762       0.9617
8612009        1.0000       1.0000
*
*hydro      curve type       regime
8612100        2              3
*
*hydro        v/a          torque      $dissipation (-q,+n)
8612101       -1.0          0.7
8612102        0.0          0.5321
*
*hydro      curve type       regime
8612200        2              4
*
*hydro        a/v          torque      $dissipation (-q,+n)
```

```
8612201      -1.0          0.7
8612202       0.0          0.3
*
*
*hydro     curve type       regime
8612300       2              5
*
*hydro       v/a           torque
8612301       0.0          -0.60
8612302       1.0          -0.20
*
*hydro     curve type       regime
8612400       2              6
*
*hydro       a/v           torque
8612401       0.0           0.3
8612402       1.0          -0.20
*
*hydro     curve type       regime
8612500       2              7
*
*hydro       v/a           torque
8612501      -1.0          -1.40
8612502       0.0          -0.60
*
*hydro     curve type       regime
8612600       2              8
*
*hydro       a/v           torque
8612601      -1.0          -1.40
8612602       0.0          -0.15
*
*=*=*=*=*=*=*=*=*=*=*=*=*=*=*=*=*=*=*=*=*=*=*=*=*=*=*=*=*=*=*=*=*=*=*=*=*=*=*=*=*=*=*=*=
$mfw pump a discharge piping and check valve                    $
*-----------------------------------------------------------------*
*hydro          component name     component type
8620000           "pmpa dis"         snglvol
*-----------------------------------------------------------------*
*hydro          area            length          volume
8620101         1.6585           50.0            0.0
*
*hydro       horz angle        vert angle        delta z
8620102         0.0              0.0              0.0
*
*hydro       roughness         hyd diam           fe
8620103         0.00015          1.4532           00
*
*hydro   ic   pressure     energy     quality
8620200  0      1047.3000 344.60000 1109.0000 .00000000
*
```

```
$*=*=*=*=*=*=*=*=*=*=*=*=*=*=*=*=*=*=*=*=*=*=*=*=*=*=*=*=*=*=*=*=*=*=*=*=*=*=*=***
$mfw pump a discharge piping check valve                          *
*----------------------------------------------------------------------*
*hydro          component name      component type
8630000           "mfwpa vl"          valve
*----------------------------------------------------------------------*
*hydro    from          to          area      f loss    r loss    vcahs
8630101   862010000     867000000    1.6585     0.0       0.0      00100
*         junc dia   beta     c     m
8630110   0.0        0.       1.    1.
*
*hydro    vel/flw       f flowrate     g flowrate     j flowrate
8630201   0         15.412000 15.412000 0.0
*
*hydro                 valve type
8630300                 chkvlv
*
*hydro    chkvlv type  init. posn  back press  leak ratio
8630301        0           0           0           0
*
$*=*=*=*=*=*=*=*=*=*=*=*=*=*=*=*=*=*=*=*=*=*=*=*=*=*=*=*=*=*=*=*=*=*=*=*=*=*=*=***
$main feedwater pump b                                            $
*----------------------------------------------------------------------*
*hydro          component name      component type
8640000           "mfw pmp "            pump
*----------------------------------------------------------------------*
*hydro          area              length              volume
8640101         2.5802            10.4532              0.0
*
*hydro        horz angle          vert angle           delta z
8640102         0.0                0.0                 0.0
*
*hydro        equil flag
8640103          00
*
*hydro       from       jun area     f loss      r loss      vcahs
8640108      860010000   1.9690       0.0         0.0        00000
*
*hydro        to        jun area     f loss      r loss      vcahs
8640109      865000000   1.6585       0.0         0.0        00000
*         junc dia   beta     c     m
8640110   0.0        0.       1.    1.
8640111   0.0        0.       1.    1.
*
*hydro    ic    pressure       energy       quality
8640200   0         715.73000 344.60000 1116.7000 .00000000
$*=*=*=*=*=*=*=*=*=*=*=*=*=*=*=*=*=*=*=*=*=*=*=*=*=*=*=*=*=*=*=*=*=*=*=*=*=*=*=***
*hydro    vel/flw     f flowrate       g flowrate     j flowrate
8640201   0         13.017000 13.017000 0.0
*----------------------------------------------------------------------*
```

```
*hydro    vel/flw     f flowrate       g flowrate     j flowrate
8640202   0         15.434000 15.434000 0.0
*----------------------------------------------------------------------*
*hydro      ptdi   2fazi   diff i   tork i   pvel i   trip no.   rvrs i
8640301     0   -1   -3        -1        -1       629         0
8640302   3570.0000 1.0000000 12690.000 1665.0000 8017.9318 1843.0000
8640303   62.400000 .00000000 .00000000 80.180000 8.0180000 .00000000
*----------------------------------------------------------------------*
*hydro   rated pump vel.   init/rated vel.   rated flow    rated head
*
*hydro    rated torque     mom of inertia    rated dens    mtr torque
*
*hydro     coeff. tf2       coeff. tf0      coeff. tf1    coeff. tf3
*
*hydro      curve type          regime
8641100          1                 1
*
*hydro          v/a              head          $normal      (+q,+n)
8641101         0.0              1.2492
8641102         0.0394           1.2372
8641103         0.0788           1.2252
8641104         0.1576           1.2012
8641105         0.2364           1.1832
8641106         0.3152           1.1652
8641107         0.3940           1.1562
8641108         0.4728           1.1502
8641109         0.5516           1.1411
8641110         0.6304           1.1291
8641111         0.7092           1.1111
8641112         0.7880           1.0931
8641113         0.8668           1.0631
8641114         0.9456           1.0330
8641115         1.0000           1.0000
*
*hydro      curve type          regime
8641200          1                 2
*
*hydro          a/v              head          $normal      (+q,+n)
8641201         0.0000           -0.3000
8641202         0.5000           0.0000
8641203         0.6250           0.2860
8641204         0.7140           0.4220
8641205         0.7931           0.4912
8641206         0.8460           0.6191
8641207         0.9065           0.7649
8641208         0.9762           0.9386
8641209         1.0000           1.0000
*
*hydro      curve type          regime
8641300          1                 3
```

```
*
*hydro      v/a        head      $dissipation (-q,+n)
8641301     -1.0000      1.2360
8641303      0.0        1.2492
*
*hydro    curve type      regime
8641400       1            4
*
*hydro      a/v        head      $dissipation (-q,+n)
8641401     -1.0        1.2360
8641402      0.0        0.7500
*
*hydro    curve type      regime
8641500       1            5
*
*hydro      v/a        head      $dissipation (-q,+n)
8641501      0.0        1.0
8641503      1.0        2.0
*
*hydro    curve type      regime
8641600       1            6
*
*hydro      a/v        head
8641601      0.0        0.75
8641602      1.0        2.0
*
*hydro    curve type      regime
8641700       1            7
*
*hydro      v/a        head
8641701     -1.0        0.20
8641703      0.0        1.00
*
*hydro    curve type      regime
8641800       1            8
*
*hydro      a/v        head
8641801     -1.0        0.20
8641802      0.0       -0.30
*
*hydro    curve type      regime
8641900       2            1
*
*hydro      v/a        torque    $normal    (+q,+n)
8641901      0.0        0.5321
8641902      0.0394      0.5138
8641903      0.0788      0.5138
8641904      0.1576      0.5321
8641905      0.2364      0.5688
8641906      0.3152      0.6239
```

```
8641907     0.3940      0.6697
8641908     0.4728      0.7248
8641909     0.5516      0.7798
8641910     0.6304      0.8257
8641911     0.7092      0.8807
8641912     0.7880      0.9174
8641913     0.8668      0.9541
8641914     0.9456      0.9908
8641915     1.0000      1.0000
*
*hydro    curve type    regime
8642000     2           2
*
*hydro      a/v         torque     $normal     (+q,+n)
8642001     0.0000      -0.1500
8642002     0.5000      0.2500
8642003     0.6250      0.3910
8642004     0.7140      0.5100
8642005     0.7931      0.6580
8642006     0.8460      0.7420
8642007     0.9065      0.8443
8642008     0.9762      0.9617
8642009     1.0000      1.0000
*
*hydro    curve type    regime
8642100     2           3
*
*hydro      v/a         torque     $dissipation (-q,+n)
8642101     -1.0        0.7
8642102     0.0         0.5321
*
*hydro    curve type    regime
8642200     2           4
*
*hydro      a/v         torque     $dissipation (-q,+n)
8642201     -1.0        0.7
8642202     0.0         0.3
*
*hydro    curve type    regime
8642300     2           5
*
*hydro      v/a         torque
8642301     0.0         -0.60
8642302     1.0         -0.20
*
*hydro    curve type    regime
8642400     2           6
*
*hydro      a/v         torque
8642401     0.0         0.3
```

```
8642402        1.0            -0.20
*
*hydro      curve type         regime
8642500         2                7
*
*hydro         v/a             torque
8642501       -1.0            -1.40
8642502        0.0            -0.60
*
*hydro      curve type         regime
8642600         2                8
*
*hydro         a/v             torque
8642601       -1.0            -1.40
8642602        0.0            -0.15
*
$*=*=*=
```

```
*
*hydro    chkvlv type  init. posn  back press  leak ratio
8660301        0           0           0           0
*
$*=*=*=
```

```
*
*hydro   ic        trip no.       alpha vrc      numeric vrc
8700200  02
*
*hydro   time     pressure       quality
8700201 0.0       1.5            0.0
*
$*=*=*=
```

```
8760201   0        16.254000 16.254000 0.0
$*=*=*=*=*=*=*=*=*=*=*=*=*=*=*=*=*=*=*=*=*=*=*=*=*=*=*=*=*=*=*=*=*=*=*=*=*=*=*=*=***
$h.p. heater outlet piping and main feedwater header                $
*-----------------------------------------------------------------*
*hydro            component name      component type
8780000             "mfw hdr"           snglvol
*-----------------------------------------------------------------*
*hydro           area              length             volume
8780101          3.3170              0.0               117.4790
*
*hydro        horz angle          vert angle           delta z
8780102          0.0                0.0                 0.0
*
*hydro         roughness           hyd diam              fe
8780103          0.00015            1.4532               00
*
*hydro    ic    pressure       energy       quality
8780200   0        1024.8000 417.50000 1109.7000 .00000000
*
$*=*=*=*=*=*=*=*=*=*=*=*=*=*=*=*=*=*=*=*=*=*=*=*=*=*=*=*=*=*=*=*=*=*=*=*=*=*=*=*=**$
$the following input represents the eccs system including the          $
$accumulators, hpi, lpi, and makeup systems                         $
*-----------------------------------------------------------------*
*hydro            component name      component type
9110000             "accumloo"          accum
*-----------------------------------------------------------------*
*hydro           area              length             volume
9110101           0.                15.73              1200.
*
*hydro        horz angle          vert angle           delta z
9110102           0.               -90.               -15.73
*
*hydro         roughness           hyd diam              fe
9110103          .00015              0.                 00
*
*hydro       pressure         temperature
9110200        675.               80.
*
*hydro       to          area      f loss      r loss      vcahs
9111101      921000000   0.3941      1.13        1.63       00000
*
*hydro     liq    liq     line    elev   wall  htr  wall   wall   n2
*          vol    lvl    length   drop   thck  flg  dens   hcap  tcon
9112200    833.    0.    28.78  -6.967 0.174    0    0.     0.    0.
$*=*=*=*=*=*=*=*=*=*=*=*=*=*=*=*=*=*=*=*=*=*=*=*=*=*=*=*=*=*=*=*=*=*=*=*=*=*=*=*=***
*hydro            component name      component type
9120000             "accumloo"          accum
*-----------------------------------------------------------------*
*hydro           area              length             volume
9120101           0.                15.73              1200.
```

```
*
*hydro        horz angle        vert angle        delta z
9120102          0.              -90.              -15.73
*
*hydro        roughness         hyd diam          fe
9120103        .00015             0.               00
*
*hydro       pressure        temperature
9120200        675.              80.
*
*hydro       to          area      f loss      r loss      vcahs
9121101      922000000   0.3941      1.4         1.9        00000
*
*hydro     liq    liq     line    elev   wall  htr  wall   wall   n2
*          vol    lvl    length   drop   thck  flg  dens   hcap  tcon
9122200    833.    0.    40.42  -1.890 0.174    0    0.     0.    0.
$*=*=*=
```

```
*
*hydro    ic    pressure       eq. temp
9210200   0         2304.3000 114.00000 1048.5000 .00000000
$*=*=*=
```

```
9310201   0.       144.        90.
$*=*=*=*=*=*=*=*=*=*=*=*=*=*=*=*=*=*=*=*=*=*=*=*=*=*=*=*=*=*=*=*=*=*=*=*=*=*=*=*=***
*hydro            component name      component type
9320000             "lpisourc"          tmdpvol
*-----------------------------------------------------------------------*
*hydro         area       length      volume
9320101       1.0e6        0.0        1.0e+06
*
*hydro      horz angle  vert angle    delta z
9320102        0.0         0.0          0.0
*
*hydro       roughness   hyd diam       fe
9320103         0.0        0.0          10
*
*hydro   ic        trip no.       alpha vrc      numeric vrc
9320200  03
*
*hydro   time     pressure     eq. temp
9320201   0.      144.         90.
$*=*=*=*=*=*=*=*=*=*=*=*=*=*=*=*=*=*=*=*=*=*=*=*=*=*=*=*=*=*=*=*=*=*=*=*=*=*=*=*=***
*hydro            component name      component type
9330000             "lpisourc"          tmdpvol
*-----------------------------------------------------------------------*
*hydro         area       length      volume
9330101       1.0e6        0.0        1.0e+06
*
*hydro      horz angle  vert angle    delta z
9330102        0.0         0.0          0.0
*
*hydro       roughness   hyd diam       fe
9330103         0.0        0.0          10
*
*hydro   ic        trip no.       alpha vrc      numeric vrc
9330200  03
*
*hydro   time     pressure     eq. temp
9330201   0.      144.         90.
$*=*=*=*=*=*=*=*=*=*=*=*=*=*=*=*=*=*=*=*=*=*=*=*=*=*=*=*=*=*=*=*=*=*=*=*=*=*=*=*=***
*hydro            component name      component type
9410000             "lpijct1"           tmdpjun
*-----------------------------------------------------------------------*
*hydro    from          to             area
9410101   931000000     921000000      .2532
*
*hydro    vel/flw       trip no.       alpha vrc      numeric vrc
9410200      0            668             p           921010000
*
*hydro     p            f velocity     g velocity     j velocity
9410201 -1.0e99            0.             0.             0
9410202    0.              0.             0.             0
```

```
9410203    1.          32.26          0.          0
9410204 69.17          32.26          0.          0
9410205 97.23          26.39          0.          0
9410206 127.4          17.6           0.          0
9410207 144.7          0.             0.          0
9410208 3000.          0.             0.          0
$*=*=*=*=*=*=*=*=*=*=*=*=*=*=*=*=*=*=*=*=*=*=*=*=*=*=*=*=*=*=*=*=*=*=*=*=*=*=*=*=*=*=*=*=***
*hydro          component name      component type
9420000            "lpijct2"           tmdpjun
*-----------------------------------------------------------------------*
*hydro    from          to            area
9420101   932000000     922000000     .2532
*
*hydro    vel/flw       trip no.      alpha vrc     numeric vrc
9420200      0          668             p          922010000
*
*hydro     p            f velocity    g velocity    j velocity
9420201 -1.0e99          0.            0.            0
9420202    0.            0.            0.            0
9420203    1.          32.26           0.            0
9420204 69.17          32.26           0.            0
9420205 97.23          26.39           0.            0
9420206 127.4          17.6            0.            0
9420207 144.7          0.              0.            0
9420208 3000.          0.              0.            0
$*=*=*=*=*=*=*=*=*=*=*=*=*=*=*=*=*=*=*=*=*=*=*=*=*=*=*=*=*=*=*=*=*=*=*=*=*=*=*=*=*=*=*=*=***
*hydro          component name      component type
9430000            "lpijct3"           tmdpjun
*-----------------------------------------------------------------------*
*hydro    from          to            area
9430101   933000000     923000000     .2532
*
*hydro    vel/flw       trip no.      alpha vrc     numeric vrc
9430200      0          668             p          923010000
*
*hydro     p            f velocity    g velocity    j velocity
9430201 -1.0e99          0.            0.            0
9430202    0.            0.            0.            0
9430203    1.          32.26           0.            0
9430204 69.17          32.26           0.            0
9430205 97.23          26.39           0.            0
9430206 127.4          17.60           0.            0
9430207 144.7          0.              0.            0
9430208 3000.          0.              0.            0
$*=*=*=*=*=*=*=*=*=*=*=*=*=*=*=*=*=*=*=*=*=*=*=*=*=*=*=*=*=*=*=*=*=*=*=*=*=*=*=*=*=*=*=*=***
*hydro          component name      component type
9510000            "hpisourc"          tmdpvol
*-----------------------------------------------------------------------*
*hydro        area       length      volume
9510101       1.0e6       0.0        1.0e+06
```

```
*
*hydro      horz angle  vert angle    delta z
9510102        0.0         0.0          0.0
*
*hydro       roughness   hyd diam       fe
9510103         0.0        0.0          10
*
*hydro   ic        trip no.       alpha vrc      numeric vrc
9510200  03
*
*hydro   time     pressure     eq. temp
9510201   0.      1000.        90.
$*=*=*=*=*=*=*=*=*=*=*=*=*=*=*=*=*=*=*=*=*=*=*=*=*=*=*=*=*=*=*=*=*=*=*=*=*=*=***
*hydro             component name      component type
9520000              "hpisourc"          tmdpvol
*-----------------------------------------------------------------------*
*hydro         area       length      volume
9520101       1.0e6        0.0        1.0e+06
*
*hydro      horz angle  vert angle    delta z
9520102        0.0         0.0          0.0
*
*hydro       roughness   hyd diam       fe
9520103         0.0        0.0          10
*
*hydro   ic        trip no.       alpha vrc      numeric vrc
9520200  03
*
*hydro   time     pressure     eq. temp
9520201   0.      1000.        90.
$*=*=*=*=*=*=*=*=*=*=*=*=*=*=*=*=*=*=*=*=*=*=*=*=*=*=*=*=*=*=*=*=*=*=*=*=*=*=***
*hydro             component name      component type
9530000              "hpisourc"          tmdpvol
*-----------------------------------------------------------------------*
*hydro         area       length      volume
9530101       1.0e6        0.0        1.0e+06
*
*hydro      horz angle  vert angle    delta z
9530102        0.0         0.0          0.0
*
*hydro       roughness   hyd diam       fe
9530103         0.0        0.0          10
*
*hydro   ic        trip no.       alpha vrc      numeric vrc
9530200  03
*
*hydro   time     pressure     eq. temp
9530201   0.      1000.        90.
$*=*=*=*=*=*=*=*=*=*=*=*=*=*=*=*=*=*=*=*=*=*=*=*=*=*=*=*=*=*=*=*=*=*=*=*=*=*=***
*hydro             component name      component type
```

```
9610000             "hpijct1"           tmdpjun
*----------------------------------------------------------------------*
*hydro    from          to            area
9610101   951000000     218000000     .01552
*
*hydro    vel/flw       trip no.      alpha vrc     numeric vrc
9610200     0           668             p           218010000
*
*hydro     p            f velocity    g velocity    j velocity
9610201 -1.0e99            0.            0.            0
9610202    0.              0.            0.            0
9610203   15.            50.40           0.            0
9610204   615.            38.45          0.            0
9610205 1015.             27.72          0.            0
9610206 1265.             19.57          0.            0
9610207 1415.             6.932          0.            0
9610208 1470.               0.           0.            0
9610209 3000.               0.           0.            0
$*=*=*=*=*=*=*=*=*=*=*=*=*=*=*=*=*=*=*=*=*=*=*=*=*=*=*=*=*=*=*=*=*=*=*=*=*=*=***
*hydro            component name      component type
9620000             "hpijct2"           tmdpjun
*----------------------------------------------------------------------*
*hydro    from          to            area
9620101   952000000     318000000     .01552
*
*hydro    vel/flw       trip no.      alpha vrc     numeric vrc
9620200     0           668             p           318010000
*
*hydro     p            f velocity    g velocity    j velocity
9620201 -1.0e99            0.            0.            0
9620202    0.              0.            0.            0
9620203   15.            50.40           0.            0
9620204   615.            38.45          0.            0
9620205 1015.             27.72          0.            0
9620206 1265.             19.57          0.            0
9620207 1415.             6.932          0.            0
9620208 1470.               0.           0.            0
9620209 3000.               0.           0.            0
$*=*=*=*=*=*=*=*=*=*=*=*=*=*=*=*=*=*=*=*=*=*=*=*=*=*=*=*=*=*=*=*=*=*=*=*=*=*=***
*hydro            component name      component type
9630000             "hpijct3"           tmdpjun
*----------------------------------------------------------------------*
*hydro    from          to            area
9630101   953000000     418000000     .01552
*
*hydro    vel/flw       trip no.      alpha vrc     numeric vrc
9630200     0           668             p           418010000
*
*hydro     p            f velocity    g velocity    j velocity
9630201 -1.0e99            0.            0.            0
```

```
9630202    0.          0.          0.          0
9630203   15.         50.40        0.          0
9630204  615.         38.45        0.          0
9630205 1015.         27.72        0.          0
9630206 1265.         19.57        0.          0
9630207 1415.         6.932        0.          0
9630208 1470.         0.           0.          0
9630209 3000.         0.           0.          0
$*=*=*=*=*=*=*=*=*=*=*=*=*=*=*=*=*=*=*=*=*=*=*=*=*=*=*=*=*=*=*=*=*=*=*=*=*=*=*=*=***
*hydro          component name      component type
9710000            "makeupsr"         tmdpvol
*----------------------------------------------------------------------*
*hydro        area       length      volume
9710101       1.0e6       0.0        1.0e+06
*
*hydro      horz angle  vert angle    delta z
9710102        0.0        0.0          0.0
*
*hydro       roughness   hyd diam       fe
9710103         0.0        0.0          10
*
*hydro   ic        trip no.       alpha vrc      numeric vrc
9710200  03          668
*
*hydro   time     pressure     eq. temp
9710201 -1.0e99   2250.        493.
9710202   0.      2250.        493.
9710203 291.      2250.        493.
9710204 301.      2250.        125.
9710205 874.      2250.        125.
9710206 884.      2250.        90.
9710207 1.0e6     2250.        90.
$*=*=*=*=*=*=*=*=*=*=*=*=*=*=*=*=*=*=*=*=*=*=*=*=*=*=*=*=*=*=*=*=*=*=*=*=*=*=*=*=***
*hydro          component name      component type
9720000            "makeup"           tmdpjun
*----------------------------------------------------------------------*
*hydro    from          to            area
9720101   971000000     318000000     .03755
*
*hydro    vel/flw       trip no.       alpha vrc      numeric vrc
9720200      0            0           cntrlvar         207
*
*hydro   cntrlvar       f velocity     g velocity     j velocity
9720201    -69.         -4.094          0.            0
9720202     0.            0.           0.            0
9720203    154.          9.137          0.            0
*
$*=*=*=*=*=*=*=*=*=*=*=*=*=*=*=*=*=*=*=*=*=*=*=*=*=*=*=*=*=*=*=*=*=*=*=*=*=*=*=*=***
$constant pressure volume for steady state initialization only!        $
*----------------------------------------------------------------------*
```

```
*hydro            component name      component type
9980000             "const p"           tmdpvol
*----------------------------------------------------------------------*
*hydro        area       length      volume
9980101       1.0e6        0.0        1.0e+06
*
*hydro      horz angle  vert angle    delta z
9980102        0.0         0.0          0.0
*
*hydro       roughness   hyd diam       fe
9980103         0.0        0.0          10
*
*hydro   ic        trip no.       alpha vrc      numeric vrc
9980200  02
*
*hydro   time     pressure       quality
9980201 0.0       2250.0         1.0
$*=*=*=*=*=*=*=*=*=*=*=*=*=*=*=*=*=*=*=*=*=*=*=*=*=*=*=*=*=*=*=*=*=*=*=*=*=*=*=*=***
*hydro            component name      component type
9990000             "const ju"          sngljun
*----------------------------------------------------------------------*
*hydro    from          to           area      f loss    r loss    vcahs
9990101   998000000     340000000    25.6563    0.0       0.0      30000
*
*hydro    vel/flw       f flowrate     g flowrate     j flowrate
9990201      1             0.0            0.0             0
$*=*=*=*=*=*=*=*=*=*=*=*=*=*=*=*=*=*=*=*=*=*=*=*=*=*=*=*=*=*=*=*=*=*=*=*=*=*=*=*=***
$*=*=*=*=*=*=*=*=*=*=*=*=*=*=*=*=*=*=*=*=*=*=*=*=*=*=*=*=*=*=*=*=*=*=*=*=*=*=*=*=***
$                                                    *
$                    heat structures                          *
$                                                    *
$*=*=*=*=*=*=*=*=*=*=*=*=*=*=*=*=*=*=*=*=*=*=*=*=*=*=*=*=*=*=*=*=*=*=*=*=*=*=*=*=***
*
*=*=*=*=*=*=*=*=*=*=*=*=*=*=*=*=*=*=*=*=*=*=*=*=*=*=*=*=*=*=*=*=*=*=*=*=*=*=*=*=***
* vessel heat structures                                  *
*=*=*=*=*=*=*=*=*=*=*=*=*=*=*=*=*=*=*=*=*=*=*=*=*=*=*=*=*=*=*=*=*=*=*=*=*=*=*=*=***
*  heat structure 100:                                   *
*  the following data represent the vessel wall in the inlet  *
*  annulus region                                        *
*=*=*=*=*=*=*=*=*=*=*=*=*=*=*=*=*=*=*=*=*=*=*=*=*=*=*=*=*=*=*=*=*=*=*=*=*=*=*=*=***
*
*crdno   heat str-s  mesh pts    geometry    init flag   left coord
11001000   5          6           2            1          6.497
*
*crdno        mesh locn flag      mesh fmt flag
11001100            0                 1
*
*crdno            no. intervals       rt. coord
11001101                2             6.516
11001102                3             7.451
```

```
*
*crdno          comp no.          interval no.
11001201            1                 2
11001202            2                 5
*
*crdno          source value       mesh int. no.
11001301            0.0                5
*
*crdno          temperature        mesh pt no.
11001401            547.49           6
*
*crdno   left volume   incr  b.cond  sa code  area/factor   ht str no.
11001501  100030000     0     1       1        3.361          1
11001502  100020000     0     1       1        1.785          2
11001503  100010000     0     1       1        1.576          3
11001504  102010000     0     1       1        1.576          4
11001505  104010000     0     1       1        2.389          5
*
*crdno   rt volume     incr  b.cond  sa code  area/factor   ht str no.
11001601    0          0     0       1        3.361          1
11001602    0          0     0       1        1.785          2
11001603    0          0     0       1        1.576          3
11001604    0          0     0       1        1.576          4
11001605    0          0     0       1        2.389          5
*
*crdno   s. type     s. mult      left heat   right heat    ht str no.
11001701    0          0.0          0.0         0.0           5
*
*crdno   equiv diam  heated len's  grid len's  grid cf's bf ht str no.
11001801   1.738     99.0   99.0   0.0   0.0   0.0   0.0 1.0  1
11001802   2.827     99.0   99.0   0.0   0.0   0.0   0.0 1.0  2
11001803   2.548     99.0   99.0   0.0   0.0   0.0   0.0 1.0  3
11001804   2.548     99.0   99.0   0.0   0.0   0.0   0.0 1.0  4
11001805   2.331     99.0   99.0   0.0   0.0   0.0   0.0 1.0  5
*
*=*=*=*=*=*=*=*=*=*=*=*=*=*=*=*=*=*=*=*=*=*=*=*=*=*=*=*=*=*=*=*=*=*=*=*=*=*
*  heat structure 106:                                  *
*  the following data represent the vessel wall in the  *
*  downcomer region                                     *
*=*=*=*=*=*=*=*=*=*=*=*=*=*=*=*=*=*=*=*=*=*=*=*=*=*=*=*=*=*=*=*=*=*=*=*=*=*
*
*crdno   heat str-s  mesh pts    geometry    init flag   left coord
11061000     7          6          2           1         6.479
*
*crdno        mesh locn flag      mesh fmt flag
11061100            0                 1
*
*crdno          no. intervals       rt. coord
11061101              2             6.497
11061102              3             7.282
```

```
*
*crdno          comp no.          interval no.
11061201            1                 2
11061202            2                 5
*
*crdno          source value       mesh int. no.
11061301            0.0                5
*
*crdno          temperature        mesh pt no.
11061401           548.03           6
*
*crdno   left volume   incr  b.cond  sa code  area/factor   ht str no.
11061501  106010000     0     1       1       2.1110          1
11061502  106020000     0     1       1       2.1110          2
11061503  106030000     0     1       1       2.1110          3
11061504  106040000     0     1       1       2.1110          4
11061505  106050000     0     1       1       2.1110          5
11061506  106060000     0     1       1       2.1110          6
11061507  106070000     0     1       1       4.0940          7
*
*
*
*
*
*
*crdno   rt volume     incr  b.cond  sa code  area/factor   ht str no.
11061601     0          0     0       1       2.1110          1
11061602     0          0     0       1       2.1110          2
11061603     0          0     0       1       2.1110          3
11061604     0          0     0       1       2.1110          4
11061605     0          0     0       1       2.1110          5
11061606     0          0     0       1       2.1110          6
11061607     0          0     0       1       4.0940          7
*
*crdno   s. type     s. mult      left heat   right heat    ht str no.
11061701    0          0.0          0.0         0.0           7
*
*crdno   equiv diam  heated len's  grid len's  grid cf's bf ht str no.
11061801   1.925     99.0   99.0   0.0   0.0   0.0   0.0 1.0   6
11061802   2.470     99.0   99.0   0.0   0.0   0.0   0.0 1.0   7
*
*=*=*=*=*=*=*=*=*=*=*=*=*=*=*=*=*=*=*=*=*=*=*=*=*=*=*=*=*=*=*=*=*=*=*=*=*=***
*  heat structure 108:                                  *
*  the following data represent the vessel wall in the lower  *
*  plenum region                                        *
*=*=*=*=*=*=*=*=*=*=*=*=*=*=*=*=*=*=*=*=*=*=*=*=*=*=*=*=*=*=*=*=*=*=*=*=*=***
*
*crdno   heat str-s  mesh pts    geometry    init flag   left coord
11081000     1          6          3           1         6.648
*
```

```
*crdno       mesh locn flag      mesh fmt flag
11081100          0                 1
*
*crdno           no. intervals      rt. coord
11081101               2            6.667
11081102               3            7.099
*
*
*crdno           comp no.           interval no.
11081201             1                 2
11081202             2                 5
*
*
*crdno           source value       mesh int. no.
11081301             0.0                5
*
*crdno           temperature        mesh pt no.
11081401            548.21           6
*
*crdno   left volume   incr  b.cond  sa code  area/factor   ht str no.
11081501  110010000     0      1        1       0.434           1
*
*
*crdno   rt volume     incr  b.cond  sa code  area/factor   ht str no.
11081601     0          0      0        1       0.434           1
*
*
*crdno   s. type     s. mult      left heat   right heat    ht str no.
11081701    0          0.0          0.0         0.0            1
*
*crdno   equiv diam  heated len's  grid len's  grid cf's bf ht str no.
11081801    0.0      99.0   99.0   0.0   0.0   0.0   0.0 1.0  1
*
*h101
*=*=*=*=*=*=*=*=*=*=*=*=*=*=*=*=*=*=*=*=*=*=*=*=*=*=*=*=*=*=*=***
*  heat structure 101:                          *
*  the following input represents the                 *
*  vessel thermal shield                          *
*=*=*=*=*=*=*=*=*=*=*=*=*=*=*=*=*=*=*=*=*=*=*=*=*=*=*=*=*=*=*=***
*
*crdno   heat str-s  mesh pts    geometry    init flag   left coord
11011000     8          3           2            1         5.943
*
*crdno       mesh locn flag      mesh fmt flag
11011100          0                 1
*
*crdno           no. intervals      rt. coord
11011101               2            6.182
*
*crdno           comp no.           interval no.
```

```
11011201          1                2
*
*crdno          source value      mesh int. no.
11011301          0.0               2
*
*crdno          temperature       mesh pt no.
11011401        549.74            3
*
*crdno   left volume   incr  b.cond  sa code  area/factor   ht str no.
11011501  104010000     0      1       1       1.295          1
11011502  106010000   10000    1       1       2.111          7
11011503  106070000     0      1       1       1.486          8
*
*crdno   rt volume     incr  b.cond  sa code  area/factor   ht str no.
11011601 104010000      0      1       1       1.295          1
11011602 106010000     10000   1       1       2.111          7
11011603 106070000      0      1       1       1.486          8
*
*crdno   s. type     s. mult      left heat   right heat    ht str no.
11011701    0         0.0          0.0         0.0            8
*
*crdno   equiv diam  heated len's  grid len's  grid cf's bf ht str no.
11011801   2.098     99.0   99.0   0.0   0.0   0.0   0.0 1.0  7
11011802   2.692     99.0   99.0   0.0   0.0   0.0   0.0 1.0  8
*
*crdno   equiv diam  heated len's  grid len's  grid cf's bf ht str no.
11011901   2.017     99.0   99.0   0.0   0.0   0.0   0.0 1.0   7
11011902   2.588     99.0   99.0   0.0   0.0   0.0   0.0 1.0   8
*h101
*=*=*=*=*=*=*=*=*=*=*=*=*=*=*=*=*=*=*=*=*=*=*=*=*=*=*=*=*=*=*=*=*=***
*  heat structure 102:                          *
*  the following data represent the core barrel wall  *
*=*=*=*=*=*=*=*=*=*=*=*=*=*=*=*=*=*=*=*=*=*=*=*=*=*=*=*=*=*=*=*=*=***
*
*crdno   heat str-s  mesh pts    geometry    init flag   left coord
11021000     12         3           2           1         5.578
*
*crdno        mesh locn flag      mesh fmt flag
11021100           0                 1
*
*crdno          no. intervals       rt. coord
11021101               2             5.747
*
*crdno          comp no.            interval no.
11021201          1                   2
*
*crdno          source value        mesh int. no.
11021301          0.0                 2
*
*crdno          temperature         mesh pt no.
```

```
11021401            549.57          3
*
*crdno   left volume   incr  b.cond  sa code  area/factor   ht str no.
11021501  112010000     0      1       1       4.094          1
11021502  116060000  -10000    1       1       2.111          7
11021503  118010000     0      1       1       2.441          8
11021504  120010000     0      1       1       1.434          9
11021505  122030000     0      1       1       1.434          10
11021506  122020000     0      1       1       1.824          11
11021507  122010000     0      1       1       3.435          12
*
*crdno   rt volume     incr  b.cond  sa code  area/factor   ht str no.
11021601 106070000      0      1       1       4.094          1
11021602 106060000    -10000   1       1       2.111          7
11021603 104010000      0      1       1       2.441          8
11021604 102010000      0      1       1       1.434          9
11021605 100010000      0      1       1       1.434          10
11021606 100020000      0      1       1       1.824          11
11021607 100030000      0      1       1       3.435          12
*
*crdno   s. type     s. mult      left heat   right heat    ht str no.
11021701    0          0.0          0.0         0.0            12
*
*crdno   equiv diam  heated len's  grid len's  grid cf's bf ht str no.
11021801   6.573     99.0   99.0   0.0   0.0   0.0   0.0 1.0   1
11021802   1.762     99.0   99.0   0.0   0.0   0.0   0.0 1.0   7
11021803   8.055     99.0   99.0   0.0   0.0   0.0   0.0 1.0   8
11021804   9.762     99.0   99.0   0.0   0.0   0.0   0.0 1.0   9
11021805   9.762     99.0   99.0   0.0   0.0   0.0   0.0 1.0   12
*
*crdno   equiv diam  heated len's  grid len's  grid cf's bf ht str no.
11021901   2.784     99.0   99.0   0.0   0.0   0.0   0.0 1.0   1
11021902   2.170     99.0   99.0   0.0   0.0   0.0   0.0 1.0   2
11021903   2.170     99.0   99.0   0.0   0.0   0.0   0.0 1.0   6
11021904   2.170     99.0   99.0   0.0   0.0   0.0   0.0 1.0   7
11021905   2.613     99.0   99.0   0.0   0.0   0.0   0.0 1.0   8
11021906   2.880     99.0   99.0   0.0   0.0   0.0   0.0 1.0   9
11021907   2.880     99.0   99.0   0.0   0.0   0.0   0.0 1.0   10
11021908   3.195     99.0   99.0   0.0   0.0   0.0   0.0 1.0   11
11021909   1.965     99.0   99.0   0.0   0.0   0.0   0.0 1.0   12
*
*hs123
*=*=*=*=*=*=*=*=*=*=*=*=*=*=*=*=*=*=*=*=*=*=*=*=*=*=*=*=*=*=*=*=*=*=*=*=***
*  heat structure 123:                                  *
*  the following input represent the uh support plate          *
* *=*=*=*=*=*=*=*=*=*=*=*=*=*=*=*=*=*=*=*=*=*=*=*=*=*=*=*=*=*=*=*=*=*=*=*=*
*crdno   heat str-s  mesh pts    geometry    init flag   left coord
11231000     1          3           1           1          0.0
*
*crdno        mesh locn flag      mesh fmt flag
```

```
11231100          0                1
*
*crdno          no. intervals      rt. coord
11231101              2            0.370
*
*crdno          comp no.           interval no.
11231201            1                2
*
*crdno          source value       mesh int. no.
11231301            0.0              2
*
*crdno          temperature        mesh pt no.
11231401          601.31             3
*
*crdno   left volume   incr  b.cond  sa code  area/factor   ht str no.
11231501  122010000     0      1        1      149.202          1
*
*crdno   rt volume     incr  b.cond  sa code  area/factor   ht str no.
11231601 126010000      0      1        1      149.202          1
*
*crdno   s. type     s. mult      left heat   right heat    ht str no.
11231701    0          0.0          0.0         0.0            1
*
*crdno   equiv diam  heated len's  grid len's  grid cf's bf ht str no.
11231801   0.0       99.0   99.0   0.0   0.0   0.0   0.0 1.0   1
*
*crdno   equiv diam  heated len's  grid len's  grid cf's bf ht str no.
11231901   0.0       99.0   99.0   0.0   0.0   0.0   0.0 1.0   1
*
*hs123
*=*=*=*=*=*=*=*=*=*=*=*=*=*=*=*=*=*=*=*=*=*=*=*=*=*=*=*=*=*=*=*=*=*=**
*  heat structure 125:                                  *
*  the following hs represents the uh vertical sturctures*
*=*=*=*=*=*=*=*=*=*=*=*=*=*=*=*=*=*=*=*=*=*=*=*=*=*=*=*=*=*=*=*=*=*=**
*
*crdno   heat str-s  mesh pts    geometry    init flag   left coord
11251000     1          3           2            1         0.164
*
*crdno        mesh locn flag      mesh fmt flag
11251100            0                1
*
*crdno          no. intervals      rt. coord
11251101              2            0.185
*
*crdno          comp no.           interval no.
11251201            1                2
*
*crdno          source value       mesh int. no.
11251301            0.0              2
*
```

```
*crdno          temperature       mesh pt no.
11251401          601.15            3
*
*crdno   left volume   incr  b.cond  sa code  area/factor   ht str no.
11251501      0        0     0       1       369.675          1
*
*crdno   rt volume     incr  b.cond  sa code  area/factor   ht str no.
11251601  126010000    0     1       1       369.675          1
*
*crdno   s. type     s. mult     left heat   right heat    ht str no.
11251701    0         0.0         0.0         0.0           1
*
*crdno   equiv diam  heated len's  grid len's  grid cf's bf ht str no.
11251801    0.0      99.0   99.0   0.0   0.0   0.0   0.0 1.0   1
*
*crdno   equiv diam  heated len's  grid len's  grid cf's bf ht str no.
11251901    0.0      99.0   99.0   0.0   0.0   0.0   0.0 1.0   1
*=*=*=*=*=*=*=*=*=*=*=*=*=*=*=*=*=*=*=*=*=*=*=*=*=*=*=*=*=*=*=*=*=**
*  heat structure 128:                                  *
*  the following data represent the vessel closure head  *
*=*=*=*=*=*=*=*=*=*=*=*=*=*=*=*=*=*=*=*=*=*=*=*=*=*=*=*=*=*=*=*=*=**
*
*crdno   heat str-s  mesh pts    geometry    init flag   left coord
11281000     1          6          3           1         6.221
*
*crdno        mesh locn flag      mesh fmt flag
11281100           0                 1
*
*crdno          no. intervals       rt. coord
11281101               2             6.240
11281102               3             7.259
*
*crdno          comp no.            interval no.
11281201            1                  2
11281202            2                  5
*
*crdno          source value        mesh int. no.
11281301             0.0                5
*
*crdno          temperature         mesh pt no.
11281401          597.53             6
*
*crdno   left volume   incr  b.cond  sa code  area/factor   ht str no.
11281501  126010000    0     1       1       0.540            1
*
*crdno   rt volume     incr  b.cond  sa code  area/factor   ht str no.
11281601     0         0     0       1       0.540            1
*
*crdno   s. type     s. mult     left heat   right heat    ht str no.
11281701    0         0.0         0.0         0.0           1
```

```
*
*crdno   equiv diam  heated len's  grid len's  grid cf's bf ht str no.
11281801    0.0      99.0   99.0   0.0   0.0   0.0   0.0 1.0   1
*
*crdno   equiv diam  heated len's  grid len's  grid cf's bf ht str no.
11281901    0.0      99.0   99.0   0.0   0.0   0.0   0.0 1.0   1
*=*=*=*=*=*=*=*=*=*=*=*=*=*=*=*=*=*=*=*=*=*=*=*=*=*=*=*=*=*=*=*=*=*=*=*=*
*  heat structure 121:                                    *
*  the following input represents the up vertical internals     *
*=*=*=*=*=*=*=*=*=*=*=*=*=*=*=*=*=*=*=*=*=*=*=*=*=*=*=*=*=*=*=*=*=*=*=*=*
*
*crdno   heat str-s  mesh pts    geometry    init flag   left coord
11211000     5          3           2            1          .257
*
*crdno        mesh locn flag      mesh fmt flag
11211100            0                  1
*
*crdno            no. intervals       rt. coord
11211101                2             0.296
*
*crdno            comp no.            interval no.
11211201              1                  2
*
*crdno            source value        mesh int. no.
11211301              0.0                2
*
*crdno            temperature         mesh pt no.
11211401            601.26               3
*
*crdno   left volume   incr  b.cond  sa code  area/factor   ht str no.
11211501  122010000     0      1        1      339.660          1
11211502  122020000     0      1        1      381.285          2
11211503  122030000     0      1        1      178.821          3
11211504  120010000     0      1        1      178.821          4
11211505  118010000     0      1        1      212.368          5
*
*crdno   rt volume     incr  b.cond  sa code  area/factor   ht str no.
11211601 122010000      0      1        1      339.660          1
11211602 122020000      0      1        1      381.285          2
11211603 122030000      0      1        1      178.821          3
11211604 120010000      0      1        1      178.821          4
11211605 118010000      0      1        1      212.368          5
*
*crdno   s. type     s. mult      left heat   right heat    ht str no.
11211701    0          0.0          0.0         0.0            5
*
*crdno   equiv diam  heated len's  grid len's  grid cf's bf ht str no.
11211801   0.257     99.0   99.0   0.0   0.0   0.0   0.0 1.0   5
*
*crdno   equiv diam  heated len's  grid len's  grid cf's bf ht str no.
```

```
11211901   1.528     99.0   99.0   0.0   0.0   0.0   0.0 1.0   5
*
*=*=*=*=*=*=*=*=*=*=*=*=*=*=*=*=*=*=*=*=*=*=*=*=*=*=*=*=*=*=*=*=*=***
*  heat structure 116:                                  *
*  the following data represent the core baffle assembly  *
*=*=*=*=*=*=*=*=*=*=*=*=*=*=*=*=*=*=*=*=*=*=*=*=*=*=*=*=*=*=*=*=*=***
*
*crdno   heat str-s  mesh pts    geometry    init flag   left coord
11161000     6          3           2            1         7.009
*
*crdno        mesh locn flag      mesh fmt flag
11161100            0                  1
*
*crdno            no. intervals       rt. coord
11161101                 2             7.144
*
*crdno            comp no.            interval no.
11161201               1                  2
*
*crdno            source value        mesh int. no.
11161301               0.0                 2
*
*crdno            temperature         mesh pt no.
11161401            557.00             3
*
*crdno   left volume   incr  b.cond  sa code  area/factor   ht str no.
11161501  114060000  -10000    1        1       2.1110          6
*
*crdno   rt volume     incr  b.cond  sa code  area/factor   ht str no.
11161601 116010000    10000    1        1       2.1110          6
*
*crdno   s. type     s. mult      left heat   right heat    ht str no.
11161701    0          0.0           0.0         0.0            6
*
*crdno   equiv diam  heated len's  grid len's  grid cf's bf ht str no.
11161801   4.910     99.0   99.0   0.0   0.0   0.0   0.0 1.0   6
*
*crdno   equiv diam  heated len's  grid len's  grid cf's bf ht str no.
11161901   1.432     99.0   99.0   0.0   0.0   0.0   0.0 1.0   6
*
*=*=*=*=*=*=*=*=*=*=*=*=*=*=*=*=*=*=*=*=*=*=*=*=*=*=*=*=*=*=*=*=*=*=*=
*  heat structure 118:                                  *
*  the following data represent the upper core plate and fuel  *
*  assembly top nozzles                                 *
*=*=*=*=*=*=*=*=*=*=*=*=*=*=*=*=*=*=*=*=*=*=*=*=*=*=*=*=*=*=*=*=*=*=*=
*
*crdno   heat str-s  mesh pts    geometry    init flag   left coord
11181000     1          3           1            1          0.0
*
*crdno        mesh locn flag      mesh fmt flag
```

```
11181100          0                1
*
*crdno          no. intervals      rt. coord
11181101              2            0.081
*
*crdno          comp no.           interval no.
11181201            1                 2
*
*crdno          source value       mesh int. no.
11181301            0.0                2
*
*crdno          temperature        mesh pt no.
11181401           608.05           3
*
*crdno   left volume   incr  b.cond  sa code  area/factor   ht str no.
11181501  118010000     0      1        1      144.005          1
*
*crdno   rt volume     incr  b.cond  sa code  area/factor   ht str no.
11181601 118010000      0      1        1      144.005          1
*
*crdno   s. type     s. mult      left heat   right heat    ht str no.
11181701    0          0.0          0.0         0.0            1
*
*crdno   equiv diam  heated len's  grid len's  grid cf's bf ht str no.
11181801   0.0       99.0   99.0   0.0   0.0   0.0   0.0 1.0   1
*
*crdno   equiv diam  heated len's  grid len's  grid cf's bf ht str no.
11181901   0.0       99.0   99.0   0.0   0.0   0.0   0.0 1.0   1
*
*
*=*=*=*=*=*=*=*=*=*=*=*=*=*=*=*=*=*=*=*=*=*=*=*=*=*=*=*=*=*=*=*=*=*=*=**
*  heat structure 115:                                  *
*  the following data represent the lower plenum              *
*  volume internals                                     *
*=*=*=*=*=*=*=*=*=*=*=*=*=*=*=*=*=*=*=*=*=*=*=*=*=*=*=*=*=*=*=*=*=*=*=**
*
*crdno   heat str-s  mesh pts    geometry    init flag   left coord
11151000     2          3           1            1          0.0
*
*crdno        mesh locn flag      mesh fmt flag
11151100           0                 1
*
*crdno          no. intervals      rt. coord
11151101              2            0.154
*
*crdno          comp no.           interval no.
11151201            1                 2
*
*crdno          source value       mesh int. no.
11151301            0.0                2
```

```
*
*crdno          temperature       mesh pt no.
11151401          549.51          3
*
*crdno   left volume   incr  b.cond  sa code  area/factor   ht str no.
11151501  112010000     0      1       1      516.446         1
11151502  110010000     0      1       1      213.003         2
*
*crdno   rt volume     incr  b.cond  sa code  area/factor   ht str no.
11151601 112010000      0      1       1      516.446         1
11151602 110010000      0      1       1      213.003         2
*
*crdno   s. type     s. mult      left heat   right heat    ht str no.
11151701    0         0.0          0.0         0.0           2
*
*crdno   equiv diam  heated len's  grid len's  grid cf's bf ht str no.
11151801   0.0       99.0   99.0   0.0   0.0   0.0   0.0 1.0   1
11151802   0.0       99.0   99.0   0.0   0.0   0.0   0.0 1.0   2
*
*crdno   equiv diam  heated len's  grid len's  grid cf's bf ht str no.
11151901   0.0       99.0   99.0   0.0   0.0   0.0   0.0 1.0   1
11151902   0.0       99.0   99.0   0.0   0.0   0.0   0.0 1.0   2
*
*
*=*=*=*=*=*=*=*=*=*=*=*=*=*=*=*=*=*=*=*=*=*=*=*=*=*=*=*=*=*=*=*=*=*=*=*=*=*=*
*  heat structure 114:                          *
*  the following data represent the core fuel pins  *
*  in the average core                          *
*=*=*=*=*=*=*=*=*=*=*=*=*=*=*=*=*=*=*=*=*=*=*=*=*=*=*=*=*=*=*=*=*=*=*=*=*=*=*
*
*crdno   heat str-s  mesh pts    geometry    init flag   left coord
11141000     6          9          2           1          0.0
*
*crdno        mesh locn flag      mesh fmt flag
11141100            0                 1
*
*crdno          no. intervals       rt. coord
11141101               5            0.01485
11141102               1            0.01517
11141103               2            0.01767
*
*crdno          comp no.            interval no.
11141201            5                  5
11141202            6                  6
11141203            4                  8
*
*crdno          source value        mesh int. no.
11141301          0.9500                1
11141302          0.9600                2
11141303          1.0200                3
```

```
11141304          1.1500              4
11141305          1.3784              5
11141307          0.0                 8
*
*crdno          temperature        mesh pt no.
11141401          1507.0            1
11141402          1391.0            3
11141403          711.0             6
11141404          636.0             7
11141406          605.0             9
*
*crdno   left volume   incr  b.cond  sa code  area/factor   ht str no.
11141501     0        0     0       0        0.0          1
11141502     0        0     0       0        0.0          2
11141503     0        0     0       0        0.0          3
11141504     0        0     0       0        0.0          4
11141505     0        0     0       0        0.0          5
11141506     0        0     0       0        0.0          6
*
*crdno   rt volume     incr  b.cond  sa code  area/factor   ht str no.
11141601 114010000    10000    1       0      7506.45          5
11141603 114060000      0      1       0      5138.24          6
*
*crdno   s. type     s. mult      left heat   right heat    ht str no.
11141701   100       0.166         0.0         0.0           1
11141702   100       0.184         0.0         0.0           2
11141703   100       0.181         0.0         0.0           3
11141704   100       0.180         0.0         0.0           4
11141705   100       0.177         0.0         0.0           5
11141706   100       0.113         0.0         0.0           6
*
*crdno   equiv diam  heated len's  grid len's  grid cf's  bf ht str no.
11141901  0.04687    1.055 10.945  0.993 0.993  1.0  1.0  1.0   1
11141902  0.04687    3.166  8.834  0.993 0.993  1.0  1.0  1.0   2
11141903  0.04687    5.277  6.723  0.993 0.993  1.0  1.0  1.0   3
11141904  0.04687    7.388  4.612  0.993 0.993  1.0  1.0  1.0   4
11141905  0.04687    9.499  2.501  0.993 0.993  1.0  1.0  1.0   5
11141906  0.04687   11.277  0.723  0.660 0.660  1.0  1.0  1.0   6
*
$*=*=*=*=*=*=*=*=*=*=*=*=*=*=*=*=*=*=*=*=*=*=*=*=*=*=*=*=*=*=*=*=*=*=*=*=*=*=*=***
$loop a heat structures                                          $
$*=*=*=*=*=*=*=*=*=*=*=*=*=*=*=*=*=*=*=*=*=*=*=*=*=*=*=*=*=*=*=*=*=*=*=*=*=*=*=***
*  loops a,b,and c hot leg heat structures                          *
$-----------------------------------------------------------------------*
*
*crdno   heat str-s  mesh pts    geometry    init flag   left coord
12041000     12         3          2           1         1.208
*
*crdno        mesh locn flag      mesh fmt flag
12041100           0                 1
```

```
*
*crdno          no. intervals      rt. coord
12041101              2            1.417
*
*crdno          comp no.           interval no.
12041201            1                 2
*
*crdno          source value       mesh int. no.
12041301            0.0               2
*
*crdno          temperature        mesh pt no.
12041401          607.71           3
*
*crdno   left volume   incr  b.cond  sa code  area/factor   ht str no.
12041501  204010000    0     1       1       5.3105         1
12041502  204020000    0     1       1       5.3105         2
12041503  204030000    0     1       1       5.3105         3
12041504  204040000    0     1       1       6.7932         4
12041505  304010000    0     1       1       5.3105         5
12041506  304020000    0     1       1       5.3105         6
12041507  304030000    0     1       1       5.3105         7
12041508  304040000    0     1       1       6.7932         8
12041509  404010000    0     1       1       5.3105         9
12041510  404020000    0     1       1       5.3105        10
12041511  404030000    0     1       1       5.3105        11
12041512  405010000    0     1       1       6.7932        12
*
*crdno   rt volume     incr  b.cond  sa code  area/factor   ht str no.
12041601    0          0     0       1       5.3105         1
12041602    0          0     0       1       5.3105         2
12041603    0          0     0       1       5.3105         3
12041604    0          0     0       1       6.7932         4
12041605    0          0     0       1       5.3105         5
12041606    0          0     0       1       5.3105         6
12041607    0          0     0       1       5.3105         7
12041608    0          0     0       1       6.7932         8
12041609    0          0     0       1       5.3105         9
12041610    0          0     0       1       5.3105        10
12041611    0          0     0       1       5.3105        11
12041612    0          0     0       1       6.7932        12
*
*crdno   s. type     s. mult      left heat   right heat    ht str no.
12041701    0          0.0          0.0         0.0           12
*
*crdno   equiv diam  heated len's  grid len's  grid cf's bf ht str no.
12041801   0.0       99.0   99.0   0.0   0.0   0.0   0.0 1.0  12
*
*crdno   corr flags  hyd diam     equiv diam  length        ht str no.
*
$*=*=*=
```

```
$loop a steam generator inlet plenum                                $
*-----------------------------------------------------------------*
$                ht str no. 2061        inlet plen              *
*-----------------------------------------------------------------*
*htstr   ht strs  m pts  geom  init  l.coord   refl  b.vol  axl. incr
12061000    1       6     3     1     4.817     0
*
*htstr        mesh locn       mesh fmt
12061100          0             1
*
*htstr        intervals       rt. coord
12061101          1             4.838
12061102          4             5.633
*
*htstr        compxn no.      interval
12061201          1             1
12061202          2             5
*
*htstr        source          interval
12061301       0.0              5
*
*htstr        temp            mesh pt.
12061401      606.11             6
*
*htstr     left vol    incr  b.cond  sa code  area/factor   ht str no.
12061501   206010000   0       1        1         0.25          1
*
*htstr     right vol   incr  b.cond  sa code  area/factor   ht str no.
12061601   0           0       0        1         0.25          1
*
*htstr      s. type   s. mult      left heat  right heat    ht str no.
12061701       0         0            0          0             1
*
*crdno   equiv diam  heated len's  grid len's  grid cf's bf ht str no.
12061801      0      99.0   99.0   0.0   0.0   0.0   0.0 1.0   1
*
$*=*=*=*=*=*=*=*=*=*=*=*=*=*=*=*=*=*=*=*=*=*=*=*=*=*=*=*=*=*=*=*=*=*=*=*=*=*=***
$sg tubes                                                           $
*-----------------------------------------------------------------*
$                ht str no. 2081        sg tubes                *
*-----------------------------------------------------------------*
*htstr   ht strs  m pts  geom  init  l.coord   refl  b.vol  axl. incr
12081000    8       6     2     1     0.0323    0
*
*htstr        mesh locn       mesh fmt
12081100          0             1
*
*htstr        intervals       rt. coord
12081101          5             0.0365
*
```

```
*htstr        compxn no.      interval
12081201          3             5
*
*htstr        source          interval
12081301       0.0              5
*
*htstr        temp            mesh pt.
12081401      557.71            6
*
*htstr     left vol    incr  b.cond  sa code  area/factor   ht str no.
12081501   208010000   0       1       1       19335.4         1
12081502   208020000   10000   1       1       25178.5         7
12081503   208080000   0       1       1       19335.4         8
*
*htstr     right vol   incr  b.cond  sa code  area/factor   ht str no.
12081601   266010000   0       1       1       19335.4         1
12081602   266020000   0       1       1       25178.5         2
12081603   266030000   0       1       1       25178.5         3
12081604   266040000   0       1       1       25178.5         4
12081605   266040000   0       1       1       25178.5         5
12081606   266030000   0       1       1       25178.5         6
12081607   266020000   0       1       1       25178.5         7
12081608   266010000   0       1       1       19335.4         8
*
*htstr      s. type   s. mult      left heat  right heat    ht str no.
12081701       0         0            0          0             8
*
*crdno   equiv diam  heated len's  grid len's  grid cf's bf ht str no.
12081801      0      99.0   99.0   0.0   0.0   0.0   0.0 1.0   8
*
*crdno   equiv diam  heated len's  grid len's  grid cf's bf ht str no.
12081901      0.034  99.0   99.0   0.0   0.0   0.0   0.0 1.0   8
*
$*=*=*=*=*=*=*=*=*=*=*=*=*=*=*=*=*=*=*=*=*=*=*=*=*=*=*=*=*=*=*=*=*=*=*=*=*=*=*=***
$tube sheet                                                    $
*-----------------------------------------------------------------------*
$                ht str no. 2082          tube sheet                 *
*-----------------------------------------------------------------------*
*htstr   ht strs  m pts  geom  init  l.coord   refl  b.vol  axl. incr
12082000    2       6     1     1      0.0      0
*
*htstr        mesh locn       mesh fmt
12082100          0             1
*
*htstr        intervals       rt. coord
12082101          5            0.0537
*
*htstr        compxn no.      interval
12082201          2             5
*
```

```
*htstr        source          interval
12082301        0.0              5
*
*htstr        temp            mesh pt.
12082401      598.02             6
*
*htstr     left vol    incr  b.cond  sa code  area/factor   ht str no.
12082501   208010000   0       1       0       1185.5         1
12082502   208080000   0       1       0       1185.5         2
*
*htstr     right vol   incr  b.cond  sa code  area/factor   ht str no.
12082601   0           0       0       0       1185.5         2
*
*htstr      s. type   s. mult      left heat  right heat    ht str no.
12082701       0         0             0          0            2
*
*crdno   equiv diam  heated len's  grid len's  grid cf's bf ht str no.
12082801      0      99.0   99.0   0.0   0.0   0.0   0.0 1.0   2
*
$*=*=*=*=*=*=*=*=*=*=*=*=*=*=*=*=*=*=*=*=*=*=*=*=*=*=*=*=*=*=*=*=*=*=*=*=*=*=*=***
$outlet plenum                                                    $
*-----------------------------------------------------------------------*
$                 ht str no. 2101          outlet pl                  *
*-----------------------------------------------------------------------*
*htstr   ht strs  m pts  geom  init  l.coord   refl  b.vol  axl. incr
12101000    1       6     3     1     4.817     0
*
*htstr        mesh locn       mesh fmt
12101100          2061            1
*
*htstr        temp            mesh pt.
12101401      547.7              6
*
*htstr     left vol    incr  b.cond  sa code  area/factor   ht str no.
12101501   210010000   0       1       1       0.25           1
*
*htstr     right vol   incr  b.cond  sa code  area/factor   ht str no.
12101601   0           0       0       1       0.25           1
*
*htstr      s. type   s. mult      left heat  right heat    ht str no.
12101701       0         0             0          0            1
*
*crdno   equiv diam  heated len's  grid len's  grid cf's bf ht str no.
12101801      0      99.0   99.0   0.0   0.0   0.0   0.0 1.0   1
*
*=*=*=*=*=*=*=*=*=*=*=*=*=*=*=*=*=*=*=*=*=*=*=*=*=*=*=*=*=*=*=*=*=*=*=*=*=*=*=***
*  loops a,b,and c primary piping heat structures     *
*  between the s.g.s and rcp.s                        *
*=*=*=*=*=*=*=*=*=*=*=*=*=*=*=*=*=*=*=*=*=*=*=*=*=*=*=*=*=*=*=*=*=*=*=*=*=*=*=***
*
```

```
*crdno   heat str-s  mesh pts   geometry   init flag   left coord
12121000    15        3          2          1        1.292
*
*crdno       mesh locn flag      mesh fmt flag
12121100          0                 1
*
*crdno           no. intervals      rt. coord
12121101               2            1.513
*
*crdno           comp no.           interval no.
12121201             1                 2
*
*crdno           source value       mesh int. no.
12121301             0.0                2
*
*crdno           temperature        mesh pt no.
12121401           549.39             3
*
*crdno   left volume   incr  b.cond  sa code  area/factor   ht str no.
12121501  212010000    0     1       1       4.9599         1
12121502  212020000    0     1       1       2.7219         2
12121503  212030000    0     1       1       7.1209         3
12121504  212040000    0     1       1       4.2250         4
12121505  212050000    0     1       1       7.1209         5
12121506  312010000    0     1       1       4.9599         6
12121507  312020000    0     1       1       2.7219         7
12121508  312030000    0     1       1       7.1209         8
12121509  312040000    0     1       1       4.2250         9
12121510  312050000    0     1       1       7.1209        10
12121511  412010000    0     1       1       4.9599        11
12121512  412020000    0     1       1       2.7219        12
12121513  412030000    0     1       1       7.1209        13
12121514  412040000    0     1       1       4.2250        14
12121515  412050000    0     1       1       7.1209        15
*
*crdno   rt volume    incr  b.cond  sa code  area/factor   ht str no.
12121601    0         0     0       1       4.9599         1
12121602    0         0     0       1       2.7219         2
12121603    0         0     0       1       7.1209         3
12121604    0         0     0       1       4.2250         4
12121605    0         0     0       1       7.1209         5
12121606    0         0     0       1       4.9599         6
12121607    0         0     0       1       2.7219         7
12121608    0         0     0       1       7.1209         8
12121609    0         0     0       1       4.2250         9
12121610    0         0     0       1       7.1209        10
12121611    0         0     0       1       4.9599        11
12121612    0         0     0       1       2.7219        12
12121613    0         0     0       1       7.1209        13
12121614    0         0     0       1       4.2250        14
```

```
12121615     0          0     0       1       7.1209         15
*
*crdno   s. type     s. mult      left heat   right heat    ht str no.
12121701    0          0.0           0.0         0.0            15
*
*crdno   equiv diam  heated len's  grid len's  grid cf's bf ht str no.
12121801   0.0       99.0   99.0   0.0   0.0   0.0   0.0 1.0  15
*
*crdno   corr flags  hyd diam     equiv diam  length        ht str no.
*
*=*=*=*=*=*=*=*=*=*=*=*=*=*=*=*=*=*=*=*=*=*=*=*=*=*=*=*=*=*=*=*=***
*loops a,b,and c cold leg heat structures              *
*=*=*=*=*=*=*=*=*=*=*=*=*=*=*=*=*=*=*=*=*=*=*=*=*=*=*=*=*=*=*=*=***
*
*crdno   heat str-s  mesh pts    geometry    init flag   left coord
12161000     12          3           2            1         1.146
*
*crdno        mesh locn flag      mesh fmt flag
12161100            0                  1
*
*crdno             no. intervals       rt. coord
12161101                 2              1.346
*
*crdno             comp no.            interval no.
12161201               1                   2
*
*crdno             source value        mesh int. no.
12161301               0.0                 2
*
*crdno             temperature         mesh pt no.
12161401             549.74            3
*
*crdno   left volume   incr  b.cond  sa code  area/factor   ht str no.
12161501  216010000     0      1        1       3.9233          1
12161502  218010000     0      1        1       5.4584          2
12161503  220010000     0      1        1       5.4584          3
12161504  220020000     0      1        1       5.4584          4
12161505  316010000     0      1        1       3.9233          5
12161506  318010000     0      1        1       5.4584          6
12161507  320010000     0      1        1       5.4584          7
12161508  320020000     0      1        1       5.4584          8
12161509  416010000     0      1        1       3.9233          9
12161510  418010000     0      1        1       5.4584         10
12161511  420010000     0      1        1       5.4584         11
12161512  420020000     0      1        1       5.4584         12
*
*crdno   rt volume     incr  b.cond  sa code  area/factor   ht str no.
12161601     0          0      0       1       3.9233          1
12161602     0          0      0       1       5.4584          2
12161603     0          0      0       1       5.4584          3
```

```
12161604    0        0    0      1     5.4584        4
12161605    0        0    0      1     3.9233        5
12161606    0        0    0      1     5.4584        6
12161607    0        0    0      1     5.4584        7
12161608    0        0    0      1     5.4584        8
12161609    0        0    0      1     3.9233        9
12161610    0        0    0      1     5.4584       10
12161611    0        0    0      1     5.4584       11
12161612    0        0    0      1     5.4584       12
*
*crdno   s. type     s. mult      left heat   right heat    ht str no.
12161701    0         0.0          0.0         0.0           12
*
*crdno   equiv diam  heated len's  grid len's  grid cf's bf ht str no.
12161801   0.0       99.0   99.0   0.0   0.0   0.0   0.0 1.0  12
$*=*=*=*=*=*=*=*=*=*=*=*=*=*=*=*=*=*=*=*=*=*=*=*=*=*=*=*=*=*=*=*=*=*=*=*=*=*=***
$steam generator a secondary heat structures                          *
$-----------------------------------------------------------------------*
$sg shell, above feedring                                          $
*-----------------------------------------------------------------------*
$                ht str no. 2541          shell,1                  *
*-----------------------------------------------------------------------*
*htstr   ht strs  m pts  geom  init  l.coord   refl  b.vol  axl. incr
12541000    1       6     2     1      6.59     0
*
*htstr        mesh locn       mesh fmt
12541100          0              1
*
*htstr        intervals       rt. coord
12541101          5             6.882
*
*htstr        compxn no.      interval
12541201          2              5
*
*htstr        source          interval
12541301       0.0               5
*
*htstr        temp            mesh pt.
12541401      518.92             6
*
*htstr     left vol    incr  b.cond  sa code  area/factor   ht str no.
12541501   254010000   0       1        1         7.88          1
*
*htstr     right vol   incr  b.cond  sa code  area/factor   ht str no.
12541601   0           0       0        1         7.88          1
*
*htstr      s. type   s. mult      left heat  right heat    ht str no.
12541701       0         0            0          0             1
*
*crdno   equiv diam  heated len's  grid len's  grid cf's bf ht str no.
```

```
12541801      0      99.0   99.0   0.0   0.0   0.0   0.0 1.0   1
*
$*=*=*=
```

```
*
*htstr     left vol    incr  b.cond  sa code  area/factor   ht str no.
12621501   262010000   0       1        1        7.834          1
*
*htstr     right vol   incr  b.cond  sa code  area/factor   ht str no.
12621601   0           0       0        1        7.834          1
*
*htstr      s. type   s. mult      left heat  right heat    ht str no.
12621701       0         0             0          0             1
*
*crdno   equiv diam  heated len's  grid len's  grid cf's bf ht str no.
12621801      0      99.0   99.0   0.0   0.0   0.0   0.0 1.0   1
*
$*=*=*=*=*=*=*=*=*=*=*=*=*=*=*=*=*=*=*=*=*=*=*=*=*=*=*=*=*=*=*=*=*=*=*=*=*=*=***
$sg shell, below transition cone                                    $
*-----------------------------------------------------------------------*
$                 ht str no. 2622          shell,4                    *
*-----------------------------------------------------------------------*
*htstr   ht strs  m pts  geom  init  l.coord   refl  b.vol  axl. incr
12622000    3       6     2     1      5.08     0
*
*htstr         mesh locn       mesh fmt
12622100           0              1
*
*htstr         intervals       rt. coord
12622101           5             5.298
*
*htstr         compxn no.      interval
12622201           2              5
*
*htstr         source          interval
12622301        0.0               5
*
*htstr         temp            mesh pt.
12622402       505.59             6
*
*htstr     left vol    incr  b.cond  sa code  area/factor   ht str no.
12622501   262020000   10000   1        1        7.834          2
12622502   262040000   0       1        1        6.016          3
*
*htstr     right vol   incr  b.cond  sa code  area/factor   ht str no.
12622601   0           0       0        1        7.834          2
12622602   0           0       0        1        6.016          3
*
*htstr      s. type   s. mult      left heat  right heat    ht str no.
12622701       0         0             0          0             3
*
*crdno   equiv diam  heated len's  grid len's  grid cf's bf ht str no.
12622801      0      99.0   99.0   0.0   0.0   0.0   0.0 1.0   3
*
```

```
$*=*=*=*=*=*=*=*=*=*=*=*=*=*=*=*=*=*=*=*=*=*=*=*=*=*=*=*=*=*=*=*=*=*=*=*=*=*=*=***
$wrapper, below transition cone                                    $
*-----------------------------------------------------------------*
$                ht str no. 2661          wrapper,1                 *
*-----------------------------------------------------------------*
*htstr   ht strs  m pts  geom  init  l.coord   refl  b.vol  axl. incr
12661000    3       4     2     1     4.863     0
*
*htstr         mesh locn       mesh fmt
12661100           0              1
*
*htstr         intervals       rt. coord
12661101           3             4.894
*
*htstr         compxn no.      interval
12661201           2              3
*
*htstr         source          interval
12661301        0.0               3
*
*htstr         temp            mesh pt.
12661401       509.41             4
*
*htstr     left vol    incr  b.cond  sa code  area/factor   ht str no.
12661501   266010000   0       1        1        6.016          1
12661502   266020000   10000   1        1        7.834          3
*
*htstr     right vol   incr  b.cond  sa code  area/factor   ht str no.
12661601   262040000   0       1        1        6.016          1
12661602   262030000  -10000   1        1        7.834          3
*
*htstr      s. type   s. mult      left heat  right heat    ht str no.
12661701       0         0             0          0             3
*
*crdno   equiv diam  heated len's  grid len's  grid cf's bf ht str no.
12661801   0.130      99.0   99.0   0.0   0.0   0.0   0.0 1.0  3
*
*crdno   equiv diam  heated len's  grid len's  grid cf's bf ht str no.
12661901   0.130      99.0   99.0   0.0   0.0   0.0   0.0 1.0   3
*
$*=*=*=*=*=*=*=*=*=*=*=*=*=*=*=*=*=*=*=*=*=*=*=*=*=*=*=*=*=*=*=*=*=*=*=*=*=*=*=***
$wrapper, at transition cone                                       $
*-----------------------------------------------------------------*
$                ht str no. 2662          wrapper,2                 *
*-----------------------------------------------------------------*
*htstr   ht strs  m pts  geom  init  l.coord   refl  b.vol  axl. incr
12662000    1       4     2     1     4.902     0
*
*htstr         mesh locn       mesh fmt
12662100           0              1
```

```
*
*htstr        intervals       rt. coord
12662101          3             4.9337
*
*htstr        compxn no.      interval
12662201          2             3
*
*htstr        source          interval
12662301       0.0              3
*
*htstr        temp            mesh pt.
12662401      511.13            4
*
*htstr    left vol    incr  b.cond  sa code  area/factor   ht str no.
12662501   266040000   0       1        1        7.834          1
*
*htstr    right vol   incr  b.cond  sa code  area/factor   ht str no.
12662601   262010000   0       1        1        7.834          1
*
*htstr     s. type   s. mult      left heat  right heat    ht str no.
12662701       0         0             0          0             1
*
*crdno   equiv diam  heated len's  grid len's  grid cf's bf ht str no.
12662801   0.130     99.0   99.0   0.0   0.0   0.0   0.0 1.0   1
*
*crdno   equiv diam  heated len's  grid len's  grid cf's bf ht str no.
12662901   0.130     99.0   99.0   0.0   0.0   0.0   0.0 1.0   1
*
$*=*=*=*=*=*=*=*=*=*=*=*=*=*=*=*=*=*=*=*=*=*=*=*=*=*=*=*=*=*=*=*=*=*=*=*=*=*=*=***
$wrapper,above transition cone                                    $
*-----------------------------------------------------------------------*
$                ht str no. 2701          wrapper,3                  *
*-----------------------------------------------------------------------*
*htstr   ht strs  m pts  geom  init  l.coord   refl  b.vol  axl. incr
12701000    1       4     2     1     5.264     0
*
*htstr        mesh locn       mesh fmt
12701100          0             1
*
*htstr        intervals       rt. coord
12701101          3             5.295
*
*htstr        compxn no.      interval
12701201          2             3
*
*htstr        source          interval
12701301       0.0              3
*
*htstr        temp            mesh pt.
12701401      512.60            4
```

```
*
*htstr     left vol    incr  b.cond  sa code  area/factor   ht str no.
12701501   270010000   0       1        1        4.405          1
*
*htstr     right vol   incr  b.cond  sa code  area/factor   ht str no.
12701601   258010000   0       1        1        4.405          1
*
*htstr      s. type   s. mult      left heat  right heat    ht str no.
12701701       0         0             0          0             1
*
*crdno   equiv diam  heated len's  grid len's  grid cf's bf ht str no.
12701801      0      99.0   99.0   0.0   0.0   0.0   0.0 1.0   1
*
*crdno   equiv diam  heated len's  grid len's  grid cf's bf ht str no.
12701901      0      99.0   99.0   0.0   0.0   0.0   0.0 1.0   1
*
$*=*=*=*=*=*=*=*=*=*=*=*=*=*=*=*=*=*=*=*=*=*=*=*=*=*=*=*=*=*=*=*=*=*=*=*=*=*=*=*=*=*=*=*=***
$wrapper, around primary (swirl vane) separator                        $
*-----------------------------------------------------------------------*
$                 ht str no. 2741          wrapper,4                  *
*-----------------------------------------------------------------------*
*htstr   ht strs  m pts  geom  init  l.coord   refl  b.vol  axl. incr
12741000    1       4     2     1     5.5888    0
*
*htstr         mesh locn       mesh fmt
12741100           0              1
*
*htstr         intervals       rt. coord
12741101           3             5.6200
*
*htstr         compxn no.      interval
12741201           2              3
*
*htstr         source          interval
12741301        0.0               3
*
*htstr         temp            mesh pt.
12741401       517.96             4
*
*htstr     left vol    incr  b.cond  sa code  area/factor   ht str no.
12741501   274010000   0       1        1         7.88          1
*
*htstr     right vol   incr  b.cond  sa code  area/factor   ht str no.
12741601   254010000   0       1        1         7.88          1
*
*htstr      s. type   s. mult      left heat  right heat    ht str no.
12741701       0         0             0          0             1
*
*crdno   equiv diam  heated len's  grid len's  grid cf's bf ht str no.
12741801      0      99.0   99.0   0.0   0.0   0.0   0.0 1.0   1
```

```
*
*crdno   equiv diam  heated len's  grid len's  grid cf's bf ht str no.
12741901      0      99.0   99.0   0.0   0.0   0.0   0.0 1.0   1
*
$*=*=*=*=*=*=*=*=*=*=*=*=*=*=*=*=*=*=*=*=*=*=*=*=*=*=*=*=*=*=*=*=*=*=*=*=*=*=*=***
$primary separator (swirl vane)                                    $
*-----------------------------------------------------------------------*
$                ht str no. 2742          swirl vane                 *
*-----------------------------------------------------------------------*
*htstr   ht strs  m pts  geom  init  l.coord   refl  b.vol  axl. incr
12742000    1       4     1     1      0.0      0
*
*htstr         mesh locn       mesh fmt
12742100           0              1
*
*htstr         intervals       rt. coord
12742101           3            0.03125
*
*htstr         compxn no.      interval
12742201           2              3
*
*htstr         source          interval
12742301        0.0               3
*
*htstr         temp            mesh pt.
12742401       517.96             4
*
*htstr     left vol    incr  b.cond  sa code  area/factor   ht str no.
12742501   274010000   0       1        1        847.7          1
*
*htstr     right vol   incr  b.cond  sa code  area/factor   ht str no.
12742601   274010000   0       1        1        847.7          1
*
*htstr      s. type   s. mult      left heat  right heat    ht str no.
12742701       0         0             0          0             1
*
*crdno   equiv diam  heated len's  grid len's  grid cf's bf ht str no.
12742801      0      99.0   99.0   0.0   0.0   0.0   0.0 1.0   1
*
*crdno   equiv diam  heated len's  grid len's  grid cf's bf ht str no.
12742901      0      99.0   99.0   0.0   0.0   0.0   0.0 1.0   1
*
$*=*=*=*=*=*=*=*=*=*=*=*=*=*=*=*=*=*=*=*=*=*=*=*=*=*=*=*=*=*=*=*=*=*=*=*=*=*=*=***
$sg shell, elevation of dryer                                      $
*-----------------------------------------------------------------------*
$                ht str no. 2781          shell,5                    *
*-----------------------------------------------------------------------*
*htstr   ht strs  m pts  geom  init  l.coord   refl  b.vol  axl. incr
12781000    1       6     2     1      6.59     0
*
```

```
*htstr        mesh locn       mesh fmt
12781100          2541            1
*
*htstr                        temp flg
12781400                          2541
*
*htstr     left vol    incr  b.cond  sa code  area/factor   ht str no.
12781501   278010000   0       1        1         5.29          1
*
*htstr     right vol   incr  b.cond  sa code  area/factor   ht str no.
12781601   0           0       0        1         5.29          1
*
*htstr      s. type   s. mult      left heat  right heat    ht str no.
12781701       0         0             0          0             1
*
*crdno   equiv diam  heated len's  grid len's  grid cf's bf ht str no.
12781801      0      99.0   99.0   0.0   0.0   0.0   0.0 1.0   1
*
$*=*=*=*=*=*=*=*=*=*=*=*=*=*=*=*=*=*=*=*=*=*=*=*=*=*=*=*=*=*=*=*=*=*=*=*=*=*=***
$secondary separator (dryer vanes)                                  $
*-----------------------------------------------------------------------*
$                 ht str no. 2782          dryer                      *
*-----------------------------------------------------------------------*
*htstr   ht strs  m pts  geom  init  l.coord   refl  b.vol  axl. incr
12782000    1       4     1     1      0.0      0
*
*htstr        mesh locn       mesh fmt
12782100          0             1
*
*htstr        intervals       rt. coord
12782101          3            0.02083
*
*htstr        compxn no.      interval
12782201          2             3
*
*htstr        source          interval
12782301       0.0              3
*
*htstr        temp            mesh pt.
12782401       517.83            4
*
*htstr     left vol    incr  b.cond  sa code  area/factor   ht str no.
12782501   278010000   0       1        1         2347.         1
*
*htstr     right vol   incr  b.cond  sa code  area/factor   ht str no.
12782601   278010000   0       1        1         2347.         1
*
*htstr      s. type   s. mult      left heat  right heat    ht str no.
12782701       0         0             0          0             1
*
```

```
*crdno   equiv diam  heated len's  grid len's  grid cf's bf ht str no.
12782801      0      99.0   99.0   0.0   0.0   0.0   0.0 1.0   1
*
*crdno   equiv diam  heated len's  grid len's  grid cf's bf ht str no.
12782901      0      99.0   99.0   0.0   0.0   0.0   0.0 1.0   1
*
$*=*=*=*=*=*=*=*=*=*=*=*=*=*=*=*=*=*=*=*=*=*=*=*=*=*=*=*=*=*=*=*=*=*=*=*=*=*=***
$sg shell, at elevation of dryer, including elipsoidal top cap         $
*-----------------------------------------------------------------------*
$                ht str no. 2821          shell,6                    *
*-----------------------------------------------------------------------*
*htstr   ht strs  m pts  geom  init  l.coord   refl  b.vol  axl. incr
12821000    1       6     2     1      6.59     0
*
*htstr         mesh locn       mesh fmt
12821100           0              1
*
*htstr         intervals       rt. coord
12821101           5             6.8817
*
*htstr         compxn no.      interval
12821201           2              5
*
*htstr         source          interval
12821301        0.0               5
*
*htstr         temp            mesh pt.
12821401       518.99             6
*
*htstr     left vol    incr  b.cond  sa code  area/factor   ht str no.
12821501   282010000   0       1        1        7.781          1
*
*htstr     right vol   incr  b.cond  sa code  area/factor   ht str no.
12821601   0           0       0        1        7.781          1
*
*htstr      s. type   s. mult      left heat  right heat    ht str no.
12821701       0         0             0          0             1
*
*crdno   equiv diam  heated len's  grid len's  grid cf's bf ht str no.
12821801      0      99.0   99.0   0.0   0.0   0.0   0.0 1.0   1
*
$*=*=*=*=*=*=*=*=*=*=*=*=*=*=*=*=*=*=*=*=*=*=*=*=*=*=*=*=*=*=*=*=*=*=*=*=*=*=***
$loop b steam generator inlet plenum, u-tubes, outlet plenum  h.s.     $
*-----------------------------------------------------------------------*
$inlet plenum                                                          $
*-----------------------------------------------------------------------*
$                ht str no. 3061          inlet plen                 *
*-----------------------------------------------------------------------*
*htstr   ht strs  m pts  geom  init  l.coord   refl  b.vol  axl. incr
13061000    1       6     3     1     4.817     0
```

```
*
*htstr        mesh locn       mesh fmt
13061100          0             1
*
*htstr        intervals       rt. coord
13061101          1             4.838
13061102          4             5.633
*
*htstr        compxn no.      interval
13061201          1             1
13061202          2             5
*
*htstr        source          interval
13061301       0.0              5
*
*htstr        temp            mesh pt.
13061401      606.11             6
*
*htstr     left vol    incr  b.cond  sa code  area/factor   ht str no.
13061501   306010000   0       1        1         0.25          1
*
*htstr     right vol   incr  b.cond  sa code  area/factor   ht str no.
13061601   0           0       0        1         0.25          1
*
*htstr      s. type   s. mult      left heat  right heat    ht str no.
13061701       0         0             0          0             1
*
*crdno   equiv diam  heated len's  grid len's  grid cf's bf ht str no.
13061801      0      99.0   99.0   0.0   0.0   0.0   0.0 1.0   1
*
$*=*=*=*=*=*=*=*=*=*=*=*=*=*=*=*=*=*=*=*=*=*=*=*=*=*=*=*=*=*=*=*=*=*=*=*=*=*=***
$sg tubes                                                    $
*-----------------------------------------------------------------------*
$                 ht str no. 3081          sg tubes                  *
*-----------------------------------------------------------------------*
*htstr   ht strs  m pts  geom  init  l.coord   refl  b.vol  axl. incr
13081000    8       6     2     1     0.0323    0
*
*htstr        mesh locn       mesh fmt
13081100          0             1
*
*htstr        intervals       rt. coord
13081101          5             0.0365
*
*htstr        compxn no.      interval
13081201          3             5
*
*htstr        source          interval
13081301       0.0              5
*
```

```
*htstr        temp            mesh pt.
13081401       550.              6
*
*htstr     left vol    incr  b.cond  sa code  area/factor   ht str no.
13081501   308010000   0       1        1       19335.4         1
13081502   308020000   10000   1        1       25178.5         7
13081503   308080000   0       1        1       19335.4         8
*
*htstr     right vol   incr  b.cond  sa code  area/factor   ht str no.
13081601   366010000   0       1        1       19335.4         1
13081602   366020000   0       1        1       25178.5         2
13081603   366030000   0       1        1       25178.5         3
13081604   366040000   0       1        1       25178.5         4
13081605   366040000   0       1        1       25178.5         5
13081606   366030000   0       1        1       25178.5         6
13081607   366020000   0       1        1       25178.5         7
13081608   366010000   0       1        1       19335.4         8
*
*htstr      s. type   s. mult      left heat  right heat    ht str no.
13081701       0         0            0          0             8
*
*crdno   equiv diam  heated len's  grid len's  grid cf's bf ht str no.
13081801      0      99.0   99.0   0.0   0.0   0.0   0.0 1.0   8
*
*crdno   equiv diam  heated len's  grid len's  grid cf's bf ht str no.
13081901      0.034  99.0   99.0   0.0   0.0   0.0   0.0 1.0   8
*
$*=*=*=*=*=*=*=*=*=*=*=*=*=*=*=*=*=*=*=*=*=*=*=*=*=*=*=*=*=*=*=*=*=*=*=*=*=*=*=***
$tube sheet                                                          $
*-----------------------------------------------------------------------*
$                ht str no. 3082          tube sheet                 *
*-----------------------------------------------------------------------*
*htstr   ht strs  m pts  geom  init  l.coord   refl  b.vol  axl. incr
13082000    2       6     1     1      0.0      0
*
*htstr        mesh locn       mesh fmt
13082100          0              1
*
*htstr        intervals       rt. coord
13082101          5             0.0537
*
*htstr        compxn no.      interval
13082201          2              5
*
*htstr        source          interval
13082301       0.0               5
*
*htstr        temp            mesh pt.
13082401      575.0              6
*
```

```
*htstr     left vol    incr  b.cond  sa code  area/factor   ht str no.
13082501   308010000   0       1        0        1185.5         1
13082502   308080000   0       1        0        1185.5         2
*
*htstr     right vol   incr  b.cond  sa code  area/factor   ht str no.
13082601   0           0       0        1        1185.5         2
*
*htstr      s. type   s. mult      left heat  right heat    ht str no.
13082701       0         0             0          0             2
*
*crdno   equiv diam  heated len's  grid len's  grid cf's bf ht str no.
13082801      0      99.0   99.0   0.0   0.0   0.0   0.0 1.0   2
*
$*=*=*=*=*=*=*=*=*=*=*=*=*=*=*=*=*=*=*=*=*=*=*=*=*=*=*=*=*=*=*=*=*=*=*=*=*=*=***
$outlet plenum                                                    $
*-----------------------------------------------------------------------*
$                ht str no. 3101          outlet pl                  *
*-----------------------------------------------------------------------*
*htstr   ht strs  m pts  geom  init  l.coord   refl  b.vol  axl. incr
13101000    1       6     3     1     4.817     0
*
*htstr         mesh locn       mesh fmt
13101100          3061            1
*
*htstr         temp            mesh pt.
13101401      547.62              6
*
*htstr     left vol    incr  b.cond  sa code  area/factor   ht str no.
13101501   310010000   0       1        1         0.25          1
*
*htstr     right vol   incr  b.cond  sa code  area/factor   ht str no.
13101601   0           0       0        1         0.25          1
*
*htstr      s. type   s. mult      left heat  right heat    ht str no.
13101701       0         0             0          0             1
*
*crdno   equiv diam  heated len's  grid len's  grid cf's bf ht str no.
13101801      0      99.0   99.0   0.0   0.0   0.0   0.0 1.0   1
*
*=*=*=*=*=*=*=*=*=*=*=*=*=*=*=*=*=*=*=*=*=*=*=*=*=*=*=*=*=*=*=*=*=*=*=*=*=*=***
*  pressurizer wall heat structures                    *
*=*=*=*=*=*=*=*=*=*=*=*=*=*=*=*=*=*=*=*=*=*=*=*=*=*=*=*=*=*=*=*=*=*=*=*=*=*=***
*
*crdno   heat str-s  mesh pts    geometry    init flag   left coord
13401000      8         6           2            1         3.500
*
*crdno        mesh locn flag      mesh fmt flag
13401100           0                  1
*
*crdno             no. intervals       rt. coord
```

```
13401101          2          3.516
13401102          3          3.842
*
*crdno        comp no.        interval no.
13401201        1               2
13401202        2               5
*
*crdno        source value     mesh int. no.
13401301        0.0              5
*
*crdno        temperature      mesh pt no.
13401401        652.70         6
*
*crdno   left volume   incr  b.cond  sa code  area/factor   ht str no.
13401501  340010000    0     1       1       3.5000         1
13401502  341010000    0     1       1       4.8522         2
13401503  341020000    0     1       1       4.8522         3
13401504  341030000    0     1       1       4.8522         4
13401505  341040000    0     1       1       4.8522         5
13401506  341050000    0     1       1       4.8522         6
13401507  341060000    0     1       1       4.8522         7
13401508  341070000    0     1       1       3.5000         8
*
*crdno   rt volume     incr  b.cond  sa code  area/factor   ht str no.
13401601    0         0     0       1       3.5000         1
13401602    0         0     0       1       4.8522         2
13401603    0         0     0       1       4.8522         3
13401604    0         0     0       1       4.8522         4
13401605    0         0     0       1       4.8522         5
13401606    0         0     0       1       4.8522         6
13401607    0         0     0       1       4.8522         7
13401608    0         0     0       1       3.5000         8
*
*crdno   s. type     s. mult      left heat   right heat    ht str no.
13401701   0         0.0          0.0         0.0           8
*
*crdno   equiv diam  heated len's  grid len's  grid cf's bf ht str no.
13401801   0.0       99.0   99.0   0.0   0.0   0.0   0.0 1.0   8
*
*=*=*=*=*=*=*=*=*=*=*=*=*=*=*=*=*=*=*=*=*=*=*=*=*=*=*=*=*=*=*=*=***
*  pressurizer surge line heat structures              *
*=*=*=*=*=*=*=*=*=*=*=*=*=*=*=*=*=*=*=*=*=*=*=*=*=*=*=*=*=*=*=*=***
*
*crdno   heat str-s  mesh pts    geometry    init flag   left coord
13431000      3         3          2            1         0.438
*
*crdno        mesh locn flag      mesh fmt flag
13431100            0                 1
*
*crdno            no. intervals       rt. coord
```

```
13431101              2            0.531
*
*crdno          comp no.          interval no.
13431201            1                 2
*
*crdno          source value       mesh int. no.
13431301            0.0               2
*
*crdno          temperature        mesh pt no.
13431401           647.38           3
*
*crdno   left volume   incr  b.cond  sa code  area/factor   ht str no.
13431501  343010000     0      1       1       12.5549         1
13431502  343020000     0      1       1       22.3757         2
13431503  343030000     0      1       1       22.3757         3
*
*crdno   rt volume     incr  b.cond  sa code  area/factor   ht str no.
13431601     0          0     0       1       12.5549         1
13431602     0          0     0       1       22.3757         2
13431603     0          0     0       1       22.3757         3
*
*crdno   s. type     s. mult      left heat   right heat    ht str no.
13431701    0          0.0          0.0         0.0           3
*
*crdno   equiv diam  heated len's  grid len's  grid cf's bf ht str no.
13431801   0.0       99.0   99.0   0.0   0.0   0.0   0.0 1.0   3
*
*=*=*=*=*=*=*=*=*=*=*=*=*=*=*=*=*=*=*=*=*=*=*=*=*=*=*=*=*=*=*=*=***
*  pressurizer proportional heaters heat structures   *
*=*=*=*=*=*=*=*=*=*=*=*=*=*=*=*=*=*=*=*=*=*=*=*=*=*=*=*=*=*=*=*=***
*
*crdno   heat str-s  mesh pts    geometry    init flag   left coord
13411000      1         5           2           1         0.0
*
*crdno        mesh locn flag      mesh fmt flag
13411100           0                 1
*
*crdno          no. intervals       rt. coord
13411101              2             0.0623
13411102              2             0.0727
*
*crdno          comp no.          interval no.
13411201            1                 2
13411202            1                 4
*
*crdno          source value       mesh int. no.
13411301            1.0               2
13411302            0.0               4
*
*crdno          temperature        mesh pt no.
```

```
13411401            649.98           5
*
*crdno   left volume   incr  b.cond  sa code  area/factor   ht str no.
13411501     0          0      0        1       71.520         1
*
*crdno   rt volume     incr  b.cond  sa code  area/factor   ht str no.
13411601  341070000     0      1        1       71.520         1
*
*crdno   s. type     s. mult      left heat   right heat    ht str no.
13411701  10216        1.0           0.0         0.0            1
*
*crdno   equiv diam  heated len's  grid len's  grid cf's bf ht str no.
13411901   0.0       99.0   99.0   0.0   0.0   0.0   0.0 1.0   1
*
*=*=*=*=*=*=*=*=*=*=*=*=*=*=*=*=*=*=*=*=*=*=*=*=*=*=*=*=*=*=*=*=***
*  pressurizer backup heaters heat structures          *
*=*=*=*=*=*=*=*=*=*=*=*=*=*=*=*=*=*=*=*=*=*=*=*=*=*=*=*=*=*=*=*=***
*
*crdno   heat str-s  mesh pts    geometry    init flag   left coord
13421000      1         5           2            1         0.0
*
*crdno        mesh locn flag      mesh fmt flag
13421100            0                  1
*
*crdno            no. intervals       rt. coord
13421101                2             0.0623
13421102                2             0.0727
*
*crdno            comp no.            interval no.
13421201             1                   2
13421202             1                   4
*
*crdno            source value        mesh int. no.
13421301             1.0                 2
13421302             0.0                 4
*
*crdno            temperature         mesh pt no.
13421401            649.98            5
*
*crdno   left volume   incr  b.cond  sa code  area/factor   ht str no.
13421501     0          0      0        1       160.92         1
*
*crdno   rt volume     incr  b.cond  sa code  area/factor   ht str no.
13421601  341070000     0      1        1       160.92         1
*
*crdno   s. type     s. mult      left heat   right heat    ht str no.
13421701  10217        1.0           0.0         0.0            1
*
*crdno   equiv diam  heated len's  grid len's  grid cf's bf ht str no.
13421901   0.0       99.0   99.0   0.0   0.0   0.0   0.0 1.0   1
```

```
*
$*=*=*=*=*=*=*=*=*=*=*=*=*=*=*=*=*=*=*=*=*=*=*=*=*=*=*=*=*=*=*=*=*=*=*=*=*=*=*=***
$loop b steam generator secondary heat structures                    $
*-----------------------------------------------------------------------*
$                ht str no. 3541          shell,1                    *
*-----------------------------------------------------------------------*
*htstr   ht strs  m pts  geom  init  l.coord   refl  b.vol  axl. incr
13541000    1       6     2     1      6.59     0
*
*htstr        mesh locn       mesh fmt
13541100          0             1
*
*htstr        intervals       rt. coord
13541101          5             6.882
*
*htstr        compxn no.      interval
13541201          2             5
*
*htstr        source          interval
13541301       0.0              5
*
*htstr        temp            mesh pt.
13541401      518.61            6
*
*htstr     left vol    incr  b.cond  sa code  area/factor   ht str no.
13541501   354010000   0       1        1         7.88          1
*
*htstr     right vol   incr  b.cond  sa code  area/factor   ht str no.
13541601   0           0       0        1         7.88          1
*
*htstr      s. type   s. mult      left heat  right heat    ht str no.
13541701       0         0            0          0             1
*
*crdno   equiv diam  heated len's  grid len's  grid cf's bf ht str no.
13541801      0       99.0   99.0   0.0   0.0   0.0   0.0 1.0  1
*
$*=*=*=*=*=*=*=*=*=*=*=*=*=*=*=*=*=*=*=*=*=*=*=*=*=*=*=*=*=*=*=*=*=*=*=*=*=*=*=***
$sg shell, below feedring                                            $
*-----------------------------------------------------------------------*
$                ht str no. 3581          shell,2                    *
*-----------------------------------------------------------------------*
*htstr   ht strs  m pts  geom  init  l.coord   refl  b.vol  axl. incr
13581000    1       6     2     1      6.59     0
*
*htstr        mesh locn       mesh fmt
13581100         3541           1
*
*htstr                        temp flg
13581400                        3541
*
```

```
*htstr     left vol    incr  b.cond  sa code  area/factor   ht str no.
13581501   358010000   0       1        1        4.405          1
*
*htstr     right vol   incr  b.cond  sa code  area/factor   ht str no.
13581601   0           0       0        1        4.405          1
*
*htstr      s. type   s. mult      left heat  right heat    ht str no.
13581701       0         0             0          0             1
*
*crdno   equiv diam  heated len's  grid len's  grid cf's bf ht str no.
13581801      0      99.0   99.0   0.0   0.0   0.0   0.0 1.0   1
*
$*=*=*=*=*=*=*=*=*=*=*=*=*=*=*=*=*=*=*=*=*=*=*=*=*=*=*=*=*=*=*=*=*=*=*=*=*=*=*=*=***
$sg shell, at transition cone                                    $
*-----------------------------------------------------------------------*
$                 ht str no. 3621          shell,3                  *
*-----------------------------------------------------------------------*
*htstr   ht strs  m pts  geom  init  l.coord   refl  b.vol  axl. incr
13621000    1       6     2     1     5.648     0
*
*htstr         mesh locn       mesh fmt
13621100           0              1
*
*htstr         intervals       rt. coord
13621101           5             5.925
*
*htstr         compxn no.      interval
13621201           2              5
*
*htstr         source          interval
13621301        0.0               5
*
*htstr         temp            mesh pt.
13621401       505.27             6
*
*htstr     left vol    incr  b.cond  sa code  area/factor   ht str no.
13621501   362010000   0       1        1        7.834          1
*
*htstr     right vol   incr  b.cond  sa code  area/factor   ht str no.
13621601   0           0       0        1        7.834          1
*
*htstr      s. type   s. mult      left heat  right heat    ht str no.
13621701       0         0             0          0             1
*
*crdno   equiv diam  heated len's  grid len's  grid cf's bf ht str no.
13621801      0      99.0   99.0   0.0   0.0   0.0   0.0 1.0   1
*
$*=*=*=*=*=*=*=*=*=*=*=*=*=*=*=*=*=*=*=*=*=*=*=*=*=*=*=*=*=*=*=*=*=*=*=*=*=*=*=*=***
$sg shell, below transition cone                                 $
*-----------------------------------------------------------------------*
```

```
$                ht str no. 3622         shell,4                  *
*-----------------------------------------------------------------*
*htstr   ht strs  m pts  geom  init  l.coord   refl  b.vol  axl. incr
13622000    3       6     2     1      5.08     0
*
*htstr        mesh locn       mesh fmt
13622100          0             1
*
*htstr        intervals       rt. coord
13622101          5             5.298
*
*htstr        compxn no.      interval
13622201          2             5
*
*htstr        source          interval
13622301        0.0             5
*
*htstr        temp            mesh pt.
13622402       505.47           6
*
*htstr     left vol    incr  b.cond  sa code  area/factor   ht str no.
13622501   362020000   10000   1        1        7.834          2
13622502   362040000   0       1        1        6.016          3
*
*htstr     right vol   incr  b.cond  sa code  area/factor   ht str no.
13622601   0           0      0        1        7.834          2
13622602   0           0      0        1        6.016          3
*
*htstr      s. type   s. mult      left heat  right heat    ht str no.
13622701       0         0            0          0             3
*
*crdno   equiv diam  heated len's  grid len's  grid cf's bf ht str no.
13622801      0      99.0   99.0   0.0   0.0   0.0   0.0 1.0   3
*
$*=*=*=*=*=*=*=*=*=*=*=*=*=*=*=*=*=*=*=*=*=*=*=*=*=*=*=*=*=*=*=*=*=*=*=*=*=*=***
$wrapper, below transition cone                                  $
*-----------------------------------------------------------------*
$                ht str no. 3661         wrapper,1                *
*-----------------------------------------------------------------*
*htstr   ht strs  m pts  geom  init  l.coord   refl  b.vol  axl. incr
13661000    3       4     2     1     4.863     0
*
*htstr        mesh locn       mesh fmt
13661100          0             1
*
*htstr        intervals       rt. coord
13661101          3             4.894
*
*htstr        compxn no.      interval
13661201          2             3
```

```
*
*htstr        source          interval
13661301       0.0              3
*
*htstr        temp            mesh pt.
13661401      509.19            4
*
*htstr    left vol    incr  b.cond  sa code  area/factor   ht str no.
13661501   366010000   0       1        1        6.016          1
13661502   366020000   10000   1        1        7.834          3
*
*htstr    right vol   incr  b.cond  sa code  area/factor   ht str no.
13661601   362040000   0       1        1        6.016          1
13661602   362030000  -10000   1        1        7.834          3
*
*htstr     s. type   s. mult      left heat  right heat    ht str no.
13661701       0         0            0          0             3
*
*crdno   equiv diam  heated len's  grid len's  grid cf's bf ht str no.
13661801      0      99.0   99.0   0.0   0.0   0.0   0.0 1.0   3
*
*crdno   equiv diam  heated len's  grid len's  grid cf's bf ht str no.
13661901      0      99.0   99.0   0.0   0.0   0.0   0.0 1.0   3
*
$*=*=*=*=*=*=*=*=*=*=*=*=*=*=*=*=*=*=*=*=*=*=*=*=*=*=*=*=*=*=*=*=*=*=*=*=*=*=*=*=***
$wrapper, at transition cone                                        $
*-----------------------------------------------------------------------*
$                 ht str no. 3662          wrapper,2                  *
*-----------------------------------------------------------------------*
*htstr   ht strs  m pts  geom  init  l.coord   refl  b.vol  axl. incr
13662000    1       4     2     1     4.902     0
*
*htstr        mesh locn       mesh fmt
13662100          0              1
*
*htstr        intervals       rt. coord
13662101          3             4.9337
*
*htstr        compxn no.      interval
13662201          2              3
*
*htstr        source          interval
13662301       0.0              3
*
*htstr        temp            mesh pt.
13662401      510.81            4
*
*htstr    left vol    incr  b.cond  sa code  area/factor   ht str no.
13662501   366040000   0       1        1        7.834          1
*
```

```
*htstr     right vol   incr  b.cond  sa code  area/factor   ht str no.
13662601   362010000   0       1        1        7.834          1
*
*htstr      s. type   s. mult      left heat  right heat    ht str no.
13662701       0         0             0          0             1
*
*crdno   equiv diam  heated len's  grid len's  grid cf's bf ht str no.
13662801      0      99.0   99.0   0.0   0.0   0.0   0.0 1.0   1
*
*crdno   equiv diam  heated len's  grid len's  grid cf's bf ht str no.
13662901      0      99.0   99.0   0.0   0.0   0.0   0.0 1.0   1
*
$*=*=*=*=*=*=*=*=*=*=*=*=*=*=*=*=*=*=*=*=*=*=*=*=*=*=*=*=*=*=*=*=*=*=*=*=*=*=*=*=*=*=*=***
$wrapper,above transition cone                                    $
*-----------------------------------------------------------------------*
$                  ht str no. 3701          wrapper,3                  *
*-----------------------------------------------------------------------*
*htstr   ht strs  m pts  geom  init  l.coord   refl  b.vol  axl. incr
13701000    1       4     2     1     5.264     0
*
*htstr         mesh locn       mesh fmt
13701100           0              1
*
*htstr         intervals       rt. coord
13701101           3             5.295
*
*htstr         compxn no.      interval
13701201           2              3
*
*htstr         source          interval
13701301        0.0               3
*
*htstr         temp            mesh pt.
13701401       512.28             4
*
*htstr     left vol    incr  b.cond  sa code  area/factor   ht str no.
13701501   370010000   0       1        1        4.405          1
*
*htstr     right vol   incr  b.cond  sa code  area/factor   ht str no.
13701601   358010000   0       1        1        4.405          1
*
*htstr      s. type   s. mult      left heat  right heat    ht str no.
13701701       0         0             0          0             1
*
*crdno   equiv diam  heated len's  grid len's  grid cf's bf ht str no.
13701801      0      99.0   99.0   0.0   0.0   0.0   0.0 1.0   1
*
*crdno   equiv diam  heated len's  grid len's  grid cf's bf ht str no.
13701901      0      99.0   99.0   0.0   0.0   0.0   0.0 1.0   1
*
```

```
$*=*=*=*=*=*=*=*=*=*=*=*=*=*=*=*=*=*=*=*=*=*=*=*=*=*=*=*=*=*=*=*=*=*=*=*=*=*=*=***
$wrapper, around primary (swirl vane) separator                    $
*-----------------------------------------------------------------*
$                ht str no. 2741         wrapper,4                 *
*-----------------------------------------------------------------*
*htstr   ht strs  m pts  geom  init  l.coord   refl  b.vol  axl. incr
13741000    1       4     2     1     5.5888    0
*
*htstr        mesh locn       mesh fmt
13741100          0             1
*
*htstr        intervals       rt. coord
13741101          3             5.6200
*
*htstr        compxn no.      interval
13741201          2             3
*
*htstr        source          interval
13741301       0.0              3
*
*htstr        temp            mesh pt.
13741401       517.63            4
*
*htstr     left vol    incr  b.cond  sa code  area/factor   ht str no.
13741501   374010000   0       1        1         7.88          1
*
*htstr     right vol   incr  b.cond  sa code  area/factor   ht str no.
13741601   354010000   0       1        1         7.88          1
*
*htstr      s. type   s. mult      left heat  right heat    ht str no.
13741701       0         0             0          0             1
*
*crdno   equiv diam  heated len's  grid len's  grid cf's bf ht str no.
13741801      0      99.0   99.0   0.0   0.0   0.0   0.0 1.0   1
*
*crdno   equiv diam  heated len's  grid len's  grid cf's bf ht str no.
13741901      0      99.0   99.0   0.0   0.0   0.0   0.0 1.0   1
*
$*=*=*=*=*=*=*=*=*=*=*=*=*=*=*=*=*=*=*=*=*=*=*=*=*=*=*=*=*=*=*=*=*=*=*=*=*=*=*=***
$primary separator (swirl vane)                                    $
*-----------------------------------------------------------------*
$                ht str no. 3742         swirl vane                *
*-----------------------------------------------------------------*
*htstr   ht strs  m pts  geom  init  l.coord   refl  b.vol  axl. incr
13742000    1       4     1     1      0.0      0
*
*htstr        mesh locn       mesh fmt
13742100          0             1
*
*htstr        intervals       rt. coord
```

```
13742101          3          0.03125
*
*htstr        compxn no.      interval
13742201          2             3
*
*htstr        source          interval
13742301       0.0              3
*
*htstr        temp            mesh pt.
13742401      517.63            4
*
*htstr    left vol    incr  b.cond  sa code  area/factor   ht str no.
13742501   374010000   0       1        0        847.7          1
*
*htstr    right vol   incr  b.cond  sa code  area/factor   ht str no.
13742601   374010000   0       1        0        847.7          1
*
*htstr     s. type   s. mult      left heat  right heat    ht str no.
13742701       0         0            0          0             1
*
*crdno   equiv diam  heated len's  grid len's  grid cf's bf ht str no.
13742801      0      99.0   99.0   0.0   0.0   0.0   0.0 1.0   1
*
*crdno   equiv diam  heated len's  grid len's  grid cf's bf ht str no.
13742901      0      99.0   99.0   0.0   0.0   0.0   0.0 1.0   1
*
$*=*=*=*=*=*=*=*=*=*=*=*=*=*=*=*=*=*=*=*=*=*=*=*=*=*=*=*=*=*=*=*=*=*=*=*=*=*=***
$sg shell, elevation of dryer                                    $
*-----------------------------------------------------------------------*
$                ht str no. 3781          shell,5                    *
*-----------------------------------------------------------------------*
*htstr   ht strs  m pts  geom  init  l.coord   refl  b.vol  axl. incr
13781000    1       6     2     1      6.59     0
*
*htstr        mesh locn       mesh fmt
13781100         3541            1
*
*htstr                        temp flg
13781400                        3541
*
*htstr    left vol    incr  b.cond  sa code  area/factor   ht str no.
13781501   378010000   0       1        1         5.29          1
*
*htstr    right vol   incr  b.cond  sa code  area/factor   ht str no.
13781601   0           0       0        1         5.29          1
*
*htstr     s. type   s. mult      left heat  right heat    ht str no.
13781701       0         0            0          0             1
*
*crdno   equiv diam  heated len's  grid len's  grid cf's bf ht str no.
```

```
13781801      0      99.0   99.0   0.0   0.0   0.0   0.0 1.0   1
*
$*=*=*=*=*=*=*=*=*=*=*=*=*=*=*=*=*=*=*=*=*=*=*=*=*=*=*=*=*=*=*=*=*=*=*=*=*=*=***
$secondary separator (dryer vanes)                                  $
*-----------------------------------------------------------------------*
$                ht str no. 3782          dryer                    *
*-----------------------------------------------------------------------*
*htstr   ht strs  m pts  geom  init  l.coord   refl  b.vol  axl. incr
13782000    1       4     1     1      0.0      0
*
*htstr         mesh locn       mesh fmt
13782100           0              1
*
*htstr         intervals       rt. coord
13782101           3            0.02083
*
*htstr         compxn no.      interval
13782201           2              3
*
*htstr         source          interval
13782301        0.0               3
*
*htstr         temp            mesh pt.
13782401       517.51             4
*
*htstr     left vol    incr  b.cond  sa code  area/factor   ht str no.
13782501   378010000   0       1        0        2347.          1
*
*htstr     right vol   incr  b.cond  sa code  area/factor   ht str no.
13782601   378010000   0       1        0        2347.          1
*
*htstr      s. type   s. mult      left heat  right heat    ht str no.
13782701       0         0             0          0             1
*
*crdno   equiv diam  heated len's  grid len's  grid cf's bf ht str no.
13782801      0      99.0   99.0   0.0   0.0   0.0   0.0 1.0   1
*
*crdno   equiv diam  heated len's  grid len's  grid cf's bf ht str no.
13782901      0      99.0   99.0   0.0   0.0   0.0   0.0 1.0   1
*
$*=*=*=*=*=*=*=*=*=*=*=*=*=*=*=*=*=*=*=*=*=*=*=*=*=*=*=*=*=*=*=*=*=*=*=*=*=*=***
$sg shell, at elevation of dryer, including elipsoidal top cap         $
*-----------------------------------------------------------------------*
$                ht str no. 3821          shell,6                  *
*-----------------------------------------------------------------------*
*htstr   ht strs  m pts  geom  init  l.coord   refl  b.vol  axl. incr
13821000    1       6     2     1      6.59     0
*
*htstr         mesh locn       mesh fmt
13821100           0              1
```

```
*
*htstr        intervals       rt. coord
13821101          5             6.8817
*
*htstr        compxn no.      interval
13821201          2             5
*
*htstr        source          interval
13821301       0.0              5
*
*htstr        temp            mesh pt.
13821401      518.68            6
*
*htstr     left vol    incr  b.cond  sa code  area/factor   ht str no.
13821501   382010000   0       1        1        7.781          1
*
*htstr     right vol   incr  b.cond  sa code  area/factor   ht str no.
13821601   0           0       0        1        7.781          1
*
*htstr      s. type   s. mult      left heat  right heat    ht str no.
13821701       0         0             0          0             1
*
*crdno   equiv diam  heated len's  grid len's  grid cf's bf ht str no.
13821801      0      99.0   99.0   0.0   0.0   0.0   0.0 1.0   1
*
$*=*=*=
```

```
14061401      606.12              6
*
*htstr     left vol    incr  b.cond  sa code  area/factor   ht str no.
14061501   406010000   0       1        1         0.25          1
*
*htstr     right vol   incr  b.cond  sa code  area/factor   ht str no.
14061601   0           0       0        1         0.25          1
*
*htstr      s. type   s. mult      left heat  right heat    ht str no.
14061701       0         0             0          0             1
*
*crdno   equiv diam  heated len's  grid len's  grid cf's bf ht str no.
14061801      0      99.0   99.0   0.0   0.0   0.0   0.0 1.0   1
*
$*=*=*=*=*=*=*=*=*=*=*=*=*=*=*=*=*=*=*=*=*=*=*=*=*=*=*=*=*=*=*=*=*=*=*=*=***
$sg tubes                                                    $
*----------------------------------------------------------------------*
$                 ht str no. 4081          sg tubes                  *
*----------------------------------------------------------------------*
*htstr   ht strs  m pts  geom  init  l.coord   refl  b.vol  axl. incr
14081000    8       6     2     1     0.0323    0
*
*htstr         mesh locn       mesh fmt
14081100           0              1
*
*htstr         intervals       rt. coord
14081101           5             0.0365
*
*htstr         compxn no.      interval
14081201           3              5
*
*htstr         source          interval
14081301        0.0               5
*
*htstr         temp            mesh pt.
14081401       550.0              6
*
*htstr     left vol    incr  b.cond  sa code  area/factor   ht str no.
14081501   408010000   0       1        1       19335.4         1
14081502   408020000   10000   1        1       25178.5         7
14081503   408080000   0       1        1       19335.4         8
*
*htstr     right vol   incr  b.cond  sa code  area/factor   ht str no.
14081601   466010000   0       1        1       19335.4         1
14081602   466020000   0       1        1       25178.5         2
14081603   466030000   0       1        1       25178.5         3
14081604   466040000   0       1        1       25178.5         4
14081605   466040000   0       1        1       25178.5         5
14081606   466030000   0       1        1       25178.5         6
14081607   466020000   0       1        1       25178.5         7
```

```
14081608   466010000   0       1        1       19335.4         8
*
*htstr      s. type   s. mult      left heat  right heat    ht str no.
14081701       0         0             0          0             8
*
*crdno   equiv diam  heated len's  grid len's  grid cf's bf ht str no.
14081801      0      99.0   99.0   0.0   0.0   0.0   0.0 1.0   8
*
*crdno   equiv diam  heated len's  grid len's  grid cf's bf ht str no.
14081901      0.034  99.0   99.0   0.0   0.0   0.0   0.0 1.0   8
*
$*=*=*=*=*=*=*=*=*=*=*=*=*=*=*=*=*=*=*=*=*=*=*=*=*=*=*=*=*=*=*=*=*=*=*=*=*=*=*=*=***
$tube sheet                                                    $
*-----------------------------------------------------------------------*
$                 ht str no. 4082          tube sheet                 *
*-----------------------------------------------------------------------*
*htstr   ht strs  m pts  geom  init  l.coord   refl  b.vol  axl. incr
14082000    2       6     1     1      0.0      0
*
*htstr        mesh locn       mesh fmt
14082100           0              1
*
*htstr        intervals       rt. coord
14082101           5            0.0537
*
*htstr        compxn no.      interval
14082201           2              5
*
*htstr        source          interval
14082301        0.0               5
*
*htstr        temp            mesh pt.
14082401      575.0               6
*
*htstr     left vol    incr  b.cond  sa code  area/factor   ht str no.
14082501   408010000   0       1        0        1185.5         1
14082502   408080000   0       1        0        1185.5         2
*
*htstr     right vol   incr  b.cond  sa code  area/factor   ht str no.
14082601   0           0       0        1        1185.5         2
*
*htstr      s. type   s. mult      left heat  right heat    ht str no.
14082701       0         0             0          0             2
*
*crdno   equiv diam  heated len's  grid len's  grid cf's bf ht str no.
14082801      0      99.0   99.0   0.0   0.0   0.0   0.0 1.0   2
*
$*=*=*=*=*=*=*=*=*=*=*=*=*=*=*=*=*=*=*=*=*=*=*=*=*=*=*=*=*=*=*=*=*=*=*=*=*=*=*=*=***
$outlet plenum                                                 $
*-----------------------------------------------------------------------*
```

```
$                ht str no. 4101          outlet pl                  *
*-----------------------------------------------------------------------*
*htstr   ht strs  m pts  geom  init  l.coord   refl  b.vol  axl. incr
14101000    1       6     3     1     4.817     0
*
*htstr         mesh locn       mesh fmt
14101100          4061            1
*
*htstr         temp            mesh pt.
14101401      547.68              6
*
*htstr     left vol    incr  b.cond  sa code  area/factor   ht str no.
14101501   410010000   0       1        1         0.25          1
*
*htstr     right vol   incr  b.cond  sa code  area/factor   ht str no.
14101601   0           0       0        1         0.25          1
*
*htstr      s. type   s. mult      left heat  right heat    ht str no.
14101701       0         0            0          0             1
*
*crdno   equiv diam  heated len's  grid len's  grid cf's bf ht str no.
14101801      0      99.0   99.0   0.0   0.0   0.0   0.0 1.0   1
*
$*=*=*=*=*=*=*=*=*=*=*=*=*=*=*=*=*=*=*=*=*=*=*=*=*=*=*=*=*=*=*=*=*=*=*=*=*=*=***
$sg shell, above feedring                                                $
*-----------------------------------------------------------------------*
$                ht str no. 4541          shell,1                    *
*-----------------------------------------------------------------------*
*htstr   ht strs  m pts  geom  init  l.coord   refl  b.vol  axl. incr
14541000    1       6     2     1      6.59     0
*
*htstr         mesh locn       mesh fmt
14541100          0               1
*
*htstr         intervals       rt. coord
14541101          5             6.882
*
*htstr         compxn no.      interval
14541201          2               5
*
*htstr         source          interval
14541301        0.0               5
*
*htstr         temp            mesh pt.
14541401       518.85             6
*
*htstr     left vol    incr  b.cond  sa code  area/factor   ht str no.
14541501   454010000   0       1        1         7.88          1
*
*htstr     right vol   incr  b.cond  sa code  area/factor   ht str no.
```

```
14541601   0          0      0       1        7.88         1
*
*htstr      s. type   s. mult      left heat  right heat    ht str no.
14541701       0         0            0         0            1
*
*crdno   equiv diam  heated len's  grid len's  grid cf's bf ht str no.
14541801      0      99.0   99.0   0.0   0.0   0.0   0.0 1.0   1
*
$*=*=*=*=*=*=*=*=*=*=*=*=*=*=*=*=*=*=*=*=*=*=*=*=*=*=*=*=*=*=*=*=*=*=*=*=*=*=***
$sg shell, below feedring                                          $
*-----------------------------------------------------------------*
$                ht str no. 4581          shell,2                  *
*-----------------------------------------------------------------*
*htstr   ht strs  m pts  geom  init  l.coord   refl  b.vol  axl. incr
14581000    1       6     2     1      6.59     0
*
*htstr         mesh locn       mesh fmt
14581100          4541            1
*
*htstr                        temp flg
14581400                         4541
*
*htstr     left vol    incr  b.cond  sa code  area/factor   ht str no.
14581501   458010000   0       1        1        4.405          1
*
*htstr     right vol   incr  b.cond  sa code  area/factor   ht str no.
14581601   0           0       0        1        4.405          1
*
*htstr      s. type   s. mult      left heat  right heat    ht str no.
14581701       0         0            0         0            1
*
*crdno   equiv diam  heated len's  grid len's  grid cf's bf ht str no.
14581801      0      99.0   99.0   0.0   0.0   0.0   0.0 1.0   1
*
$*=*=*=*=*=*=*=*=*=*=*=*=*=*=*=*=*=*=*=*=*=*=*=*=*=*=*=*=*=*=*=*=*=*=*=*=*=*=***
$sg shell, at transition cone                                      $
*-----------------------------------------------------------------*
$                ht str no. 4621          shell,3                  *
*-----------------------------------------------------------------*
*htstr   ht strs  m pts  geom  init  l.coord   refl  b.vol  axl. incr
14621000    1       6     2     1     5.648     0
*
*htstr         mesh locn       mesh fmt
14621100          0               1
*
*htstr         intervals       rt. coord
14621101          5             5.925
*
*htstr         compxn no.      interval
14621201          2               5
```

```
*
*htstr        source          interval
14621301        0.0              5
*
*htstr        temp            mesh pt.
14621401       505.53            6
*
*htstr     left vol    incr  b.cond  sa code  area/factor   ht str no.
14621501   462010000   0       1        1        7.834          1
*
*htstr     right vol   incr  b.cond  sa code  area/factor   ht str no.
14621601   0           0       0        1        7.834          1
*
*htstr      s. type   s. mult      left heat  right heat    ht str no.
14621701       0         0            0          0             1
*
*crdno   equiv diam  heated len's  grid len's  grid cf's bf ht str no.
14621801      0      99.0   99.0   0.0   0.0   0.0   0.0 1.0   1
*
$*=*=*=*=*=*=*=*=*=*=*=*=*=*=*=*=*=*=*=*=*=*=*=*=*=*=*=*=*=*=*=*=*=*=*=*=*=*=*=***
$sg shell, below transition cone                                    $
*-----------------------------------------------------------------------*
$                 ht str no. 4622          shell,4                    *
*-----------------------------------------------------------------------*
*htstr   ht strs  m pts  geom  init  l.coord   refl  b.vol  axl. incr
14622000    3       6     2     1      5.08     0
*
*htstr        mesh locn       mesh fmt
14622100          0              1
*
*htstr        intervals       rt. coord
14622101          5             5.298
*
*htstr        compxn no.      interval
14622201          2              5
*
*htstr        source          interval
14622301        0.0              5
*
*htstr        temp            mesh pt.
14622402       505.52            6
*
*htstr     left vol    incr  b.cond  sa code  area/factor   ht str no.
14622501   462020000   10000   1        1        7.834          2
14622502   462040000   0       1        1        6.016          3
*
*htstr     right vol   incr  b.cond  sa code  area/factor   ht str no.
14622601   0           0       0        1        7.834          2
14622602   0           0       0        1        6.016          3
*
```

```
*htstr      s. type   s. mult      left heat  right heat    ht str no.
14622701       0         0             0          0             3
*
*crdno   equiv diam  heated len's  grid len's  grid cf's bf ht str no.
14622801      0      99.0   99.0   0.0   0.0   0.0   0.0 1.0   3
*
$*=*=*=*=*=*=*=*=*=*=*=*=*=*=*=*=*=*=*=*=*=*=*=*=*=*=*=*=*=*=*=*=*=*=*=*=*=***
$wrapper, below transition cone                                    $
*-----------------------------------------------------------------------*
$                 ht str no. 4661          wrapper,1                  *
*-----------------------------------------------------------------------*
*htstr   ht strs  m pts  geom  init  l.coord   refl  b.vol  axl. incr
14661000    3       4     2     1     4.863     0
*
*htstr         mesh locn       mesh fmt
14661100           0              1
*
*htstr         intervals       rt. coord
14661101           3             4.894
*
*htstr         compxn no.      interval
14661201           2              3
*
*htstr         source          interval
14661301        0.0               3
*
*htstr         temp            mesh pt.
14661401       509.44             4
*
*htstr     left vol    incr  b.cond  sa code  area/factor   ht str no.
14661501   466010000   0       1        1        6.016          1
14661502   466020000   10000   1        1        7.834          3
*
*htstr     right vol   incr  b.cond  sa code  area/factor   ht str no.
14661601   462040000   0       1        1        6.016          1
14661602   462030000  -10000   1        1        7.834          3
*
*htstr      s. type   s. mult      left heat  right heat    ht str no.
14661701       0         0             0          0             3
*
*crdno   equiv diam  heated len's  grid len's  grid cf's bf ht str no.
14661801      0      99.0   99.0   0.0   0.0   0.0   0.0 1.0   3
*
*crdno   equiv diam  heated len's  grid len's  grid cf's bf ht str no.
14661901      0      99.0   99.0   0.0   0.0   0.0   0.0 1.0   3
*
$*=*=*=*=*=*=*=*=*=*=*=*=*=*=*=*=*=*=*=*=*=*=*=*=*=*=*=*=*=*=*=*=*=*=*=*=*=***
$wrapper, at transition cone                                       $
*-----------------------------------------------------------------------*
$                 ht str no. 4662          wrapper,2                  *
```

```
*----------------------------------------------------------------------*
*htstr   ht strs  m pts  geom  init  l.coord   refl  b.vol  axl. incr
14662000    1       4     2     1     4.902     0
*
*htstr         mesh locn       mesh fmt
14662100           0              1
*
*htstr         intervals       rt. coord
14662101           3             4.9337
*
*htstr         compxn no.      interval
14662201           2              3
*
*htstr         source          interval
14662301        0.0               3
*
*htstr         temp            mesh pt.
14662401       511.06             4
*
*htstr     left vol    incr  b.cond  sa code  area/factor   ht str no.
14662501   466040000   0       1        1        7.834          1
*
*htstr     right vol   incr  b.cond  sa code  area/factor   ht str no.
14662601   462010000   0       1        1        7.834          1
*
*htstr      s. type   s. mult      left heat  right heat    ht str no.
14662701       0         0             0          0             1
*
*crdno   equiv diam  heated len's  grid len's  grid cf's bf ht str no.
14662801      0      99.0   99.0   0.0   0.0   0.0   0.0 1.0   1
*
*crdno   equiv diam  heated len's  grid len's  grid cf's bf ht str no.
14662901      0      99.0   99.0   0.0   0.0   0.0   0.0 1.0   1
*
$*=*=*=*=*=*=*=*=*=*=*=*=*=*=*=*=*=*=*=*=*=*=*=*=*=*=*=*=*=*=*=*=*=*=*=*=*=*=***
$wrapper,above transition cone                                        $
*----------------------------------------------------------------------*
$                 ht str no. 4701          wrapper,3                  *
*----------------------------------------------------------------------*
*htstr   ht strs  m pts  geom  init  l.coord   refl  b.vol  axl. incr
14701000    1       4     2     1     5.264     0
*
*htstr         mesh locn       mesh fmt
14701100           0              1
*
*htstr         intervals       rt. coord
14701101           3             5.295
*
*htstr         compxn no.      interval
14701201           2              3
```

```
*
*htstr        source          interval
14701301       0.0              3
*
*htstr        temp            mesh pt.
14701401      512.53            4
*
*htstr    left vol    incr  b.cond  sa code  area/factor   ht str no.
14701501   470010000   0       1        1        4.405          1
*
*htstr    right vol   incr  b.cond  sa code  area/factor   ht str no.
14701601   458010000   0       1        1        4.405          1
*
*htstr     s. type   s. mult      left heat  right heat    ht str no.
14701701       0         0            0          0             1
*
*crdno   equiv diam  heated len's  grid len's  grid cf's bf ht str no.
14701801      0      99.0   99.0   0.0   0.0   0.0   0.0 1.0   1
*
*crdno   equiv diam  heated len's  grid len's  grid cf's bf ht str no.
14701901      0      99.0   99.0   0.0   0.0   0.0   0.0 1.0   1
*
$*=*=*=*=*=*=*=*=*=*=*=*=*=*=*=*=*=*=*=*=*=*=*=*=*=*=*=*=*=*=*=*=*=*=*=*=*=*=*=***
$wrapper, around primary (swirl vane) separator                    $
*-----------------------------------------------------------------------*
$                ht str no. 4741          wrapper,4                 *
*-----------------------------------------------------------------------*
*htstr   ht strs  m pts  geom  init  l.coord   refl  b.vol  axl. incr
14741000    1       4     2     1     5.5888    0
*
*htstr        mesh locn       mesh fmt
14741100          0             1
*
*htstr        intervals       rt. coord
14741101          3             5.6200
*
*htstr        compxn no.      interval
14741201          2             3
*
*htstr        source          interval
14741301       0.0              3
*
*htstr        temp            mesh pt.
14741401      517.89            4
*
*htstr    left vol    incr  b.cond  sa code  area/factor   ht str no.
14741501   474010000   0       1        1         7.88          1
*
*htstr    right vol   incr  b.cond  sa code  area/factor   ht str no.
14741601   454010000   0       1        1         7.88          1
```

```
*
*htstr      s. type   s. mult      left heat  right heat    ht str no.
14741701       0         0             0          0             1
*
*crdno   equiv diam  heated len's  grid len's  grid cf's bf ht str no.
14741801      0       99.0   99.0   0.0   0.0   0.0   0.0 1.0  1
*
*crdno   equiv diam  heated len's  grid len's  grid cf's bf ht str no.
14741901      0      99.0   99.0   0.0   0.0   0.0   0.0 1.0   1
*
$*=*=*=*=*=*=*=*=*=*=*=*=*=*=*=*=*=*=*=*=*=*=*=*=*=*=*=*=*=*=*=*=*=*=*=*=*=*=***
$primary separator (swirl vane)                                    $
*-----------------------------------------------------------------------*
$                 ht str no. 4742          swirl vane                 *
*-----------------------------------------------------------------------*
*htstr   ht strs  m pts  geom  init  l.coord   refl  b.vol  axl. incr
14742000    1       4     1     1      0.0      0
*
*htstr         mesh locn       mesh fmt
14742100           0              1
*
*htstr         intervals       rt. coord
14742101           3            0.03125
*
*htstr         compxn no.      interval
14742201           2              3
*
*htstr         source          interval
14742301        0.0               3
*
*htstr         temp            mesh pt.
14742401       517.89             4
*
*htstr     left vol    incr  b.cond  sa code  area/factor   ht str no.
14742501   474010000   0       1        0        847.7          1
*
*htstr     right vol   incr  b.cond  sa code  area/factor   ht str no.
14742601   474010000   0       1        0        847.7          1
*
*htstr      s. type   s. mult      left heat  right heat    ht str no.
14742701       0         0             0          0             1
*
*crdno   equiv diam  heated len's  grid len's  grid cf's bf ht str no.
14742801      0      99.0   99.0   0.0   0.0   0.0   0.0 1.0   1
*
*crdno   equiv diam  heated len's  grid len's  grid cf's bf ht str no.
14742901      0      99.0   99.0   0.0   0.0   0.0   0.0 1.0   1
*
$*=*=*=*=*=*=*=*=*=*=*=*=*=*=*=*=*=*=*=*=*=*=*=*=*=*=*=*=*=*=*=*=*=*=*=*=*=*=***
$sg shell, elevation of dryer                                      $
```

```
*-----------------------------------------------------------------------*
$                ht str no. 4781          shell,5                    *
*-----------------------------------------------------------------------*
*htstr   ht strs  m pts  geom  init  l.coord   refl  b.vol  axl. incr
14781000    1       6     2     1      6.59     0
*
*htstr         mesh locn       mesh fmt
14781100          4541            1
*
*htstr                         temp flg
14781400                          4541
*
*htstr     left vol    incr  b.cond  sa code  area/factor   ht str no.
14781501   478010000   0       1        1         5.29          1
*
*htstr     right vol   incr  b.cond  sa code  area/factor   ht str no.
14781601   0           0       0        1         5.29          1
*
*htstr      s. type   s. mult      left heat  right heat    ht str no.
14781701       0         0             0          0             1
*
*crdno   equiv diam  heated len's  grid len's  grid cf's bf ht str no.
14781801      0      99.0   99.0   0.0   0.0   0.0   0.0 1.0   1
*
$*=*=*=
```

```
*htstr     right vol   incr  b.cond  sa code  area/factor   ht str no.
14782601   478010000   0       1        0        2347.          1
*
*htstr      s. type   s. mult      left heat  right heat    ht str no.
14782701       0         0             0          0             1
*
*crdno   equiv diam  heated len's  grid len's  grid cf's bf ht str no.
14782801      0      99.0   99.0   0.0   0.0   0.0   0.0 1.0   1
*
*crdno   equiv diam  heated len's  grid len's  grid cf's bf ht str no.
14782901      0      99.0   99.0   0.0   0.0   0.0   0.0 1.0   1
*
$*=*=*=*=*=*=*=*=*=*=*=*=*=*=*=*=*=*=*=*=*=*=*=*=*=*=*=*=*=*=*=*=*=*=*=*=*=*=*=*=***
$sg shell, at elevation of dryer, including elipsoidal top cap         $
*-----------------------------------------------------------------------*
$                 ht str no. 4821          shell,6                    *
*-----------------------------------------------------------------------*
*htstr   ht strs  m pts  geom  init  l.coord   refl  b.vol  axl. incr
14821000    1       6     2     1      6.59     0
*
*htstr         mesh locn       mesh fmt
14821100           0              1
*
*htstr         intervals       rt. coord
14821101           5             6.8817
*
*htstr         compxn no.      interval
14821201           2              5
*
*htstr         source          interval
14821301        0.0               5
*
*htstr         temp            mesh pt.
14821401       518.92             6
*
*htstr     left vol    incr  b.cond  sa code  area/factor   ht str no.
14821501   482010000   0       1        1        7.781          1
*
*htstr     right vol   incr  b.cond  sa code  area/factor   ht str no.
14821601   0           0       0        1        7.781          1
*
*htstr      s. type   s. mult      left heat  right heat    ht str no.
14821701       0         0             0          0             1
*
*crdno   equiv diam  heated len's  grid len's  grid cf's bf ht str no.
14821801      0      99.0   99.0   0.0   0.0   0.0   0.0 1.0   1
*
$*=*=*=*=*=*=*=*=*=*=*=*=*=*=*=*=*=*=*=*=*=*=*=*=*=*=*=*=*=*=*=*=*=*=*=*=*=*=*=*=***
$main feed line piping heat structures - from main feedwater header    *
$to each steam generator.                                              *
```

```
$*=*=*=*=*=*=*=*=*=*=*=*=*=*=*=*=*=*=*=*=*=*=*=*=*=*=*=*=*=*=*=*=*=*=*=*=*=*=*=***
$                ht str no. 5201          line a                    *
*-----------------------------------------------------------------------*
$line a heat structure modelling                                        $
*-----------------------------------------------------------------------*
*htstr   ht strs  m pts  geom  init  l.coord   refl  b.vol  axl. incr
15201000    2       4     2     0     0.5808    0
*
*htstr         mesh locn       mesh fmt
15201100           0              1
*
*htstr         intervals       rt. coord
15201101           3             0.6667
*
*htstr         compxn no.      interval
15201201           2              3
*
*htstr         source          interval
15201301         0                3
*
*htstr         temp            mesh pt.
15201401      437.03              4
*
*htstr     left vol    incr  b.cond  sa code  area/factor   ht str no.
15201501   510010000   0       1        1        182.5          1
15201502   520010000   0       1        1       165.0539        2
*
*htstr     right vol   incr  b.cond  sa code  area/factor   ht str no.
15201601   0           0       0        1        182.5          1
15201602   0           0       0        1       165.0539        2
*
*htstr      s. type   s. mult      left heat  right heat    ht str no.
15201701       0         0             0          0             2
*
*crdno   equiv diam  heated len's  grid len's  grid cf's bf ht str no.
15201801      0      99.0   99.0   0.0   0.0   0.0   0.0 1.0   2
*
$*=*=*=*=*=*=*=*=*=*=*=*=*=*=*=*=*=*=*=*=*=*=*=*=*=*=*=*=*=*=*=*=*=*=*=*=*=*=*=***
$heat structures for the main steam line from steam generator a to     $
$the steam header                                                      $
*-----------------------------------------------------------------------*
$                ht str no. 5501          line a                    *
*-----------------------------------------------------------------------*
*htstr   ht strs  m pts  geom  init  l.coord   refl  b.vol  axl. incr
15501000    2       4     2     1     0.9924    0
*
*htstr         mesh locn       mesh fmt
15501100           0              1
*
*htstr         intervals       rt. coord
```

```
15501101          3            1.0833
*
*htstr        compxn no.      interval
15501201          2             3
*
*htstr        source          interval
15501301       0.0              3
*
*htstr                       temp flg
15501400                        0
*
*htstr        temp            mesh pt.
15501401      509.5              4
*
*htstr     left vol    incr  b.cond  sa code  area/factor   ht str no.
15501501   550010000   0       1        1       274.8631        1
15501502   560010000   0       1        1        20.0000        2
*
*htstr     right vol   incr  b.cond  sa code  area/factor   ht str no.
15501601   0           0       0        1       274.8631        1
15501602   0           0       0        1        20.0000        2
*
*htstr      s. type   s. mult      left heat  right heat    ht str no.
15501701       0         0            0         0             1
15501702       0         0            0         0             2
*
*crdno   equiv diam  heated len's  grid len's  grid cf's bf ht str no.
15501801      0      99.0   99.0   0.0   0.0   0.0   0.0 1.0   2
*
$*=*=*=
```

```
16201401      437.07              4
*
*htstr     left vol    incr  b.cond  sa code  area/factor   ht str no.
16201501   610010000   0       1        1        178.0          1
16201502   620010000   0       1        1       59.1809         2
*
*htstr     right vol   incr  b.cond  sa code  area/factor   ht str no.
16201601   0           0       0        1        178.0          1
16201602   0           0       0        1       59.1809         2
*
*htstr      s. type   s. mult      left heat  right heat    ht str no.
16201701       0         0             0          0             2
*
*crdno   equiv diam  heated len's  grid len's  grid cf's bf ht str no.
16201801      0      99.0   99.0   0.0   0.0   0.0   0.0 1.0   2
*
$*=*=*=*=*=*=*=*=*=*=*=*=*=*=*=*=*=*=*=*=*=*=*=*=*=*=*=*=*=*=*=*=*=*=*=*=*=*=*=*=***
$heat structures for main steam line b - from steam generator b to     *
$steam header                                                          *
*-----------------------------------------------------------------------*
*htstr   ht strs  m pts  geom  init  l.coord   refl  b.vol  axl. incr
16501000    2       4     2     1     0.9924    0
*
*htstr         mesh locn       mesh fmt
16501100           0              1
*
*htstr         intervals       rt. coord
16501101           3             1.0833
*
*htstr         compxn no.      interval
16501201           2              3
*
*htstr         source          interval
16501301        0.0               3
*
*htstr                         temp flg
16501400                          0
*
*htstr         temp            mesh pt.
16501401      509.5               4
*
*htstr     left vol    incr  b.cond  sa code  area/factor   ht str no.
16501501   650010000   0       1        1      188.1638         1
16501502   660010000   0       1        1       20.0000         2
*
*htstr     right vol   incr  b.cond  sa code  area/factor   ht str no.
16501601   0           0       0        1      188.1638         1
16501602   0           0       0        1       20.0000         2
*
*htstr      s. type   s. mult      left heat  right heat    ht str no.
```

```
16501701      0       0          0       0          2
*
*crdno   equiv diam  heated len's  grid len's  grid cf's bf ht str no.
16501801     0     99.0   99.0   0.0   0.0   0.0   0.0 1.0   2
*
$*=*=*=*=*=*=*=*=*=*=*=*=*=*=*=*=*=*=*=*=*=*=*=*=*=*=*=*=*=*=*=*=*=*=*=*=*=*=***
$                ht str no. 7201          line c                    *
*-----------------------------------------------------------------------*
$mfw line c heat structure modeling                                    $
*-----------------------------------------------------------------------*
*htstr   ht strs  m pts  geom  init  l.coord   refl  b.vol  axl. incr
17201000    2       4     2     0     0.5808    0
*
*htstr        mesh locn       mesh fmt
17201100          0             1
*
*htstr        intervals       rt. coord
17201101          3             0.6667
*
*htstr        compxn no.      interval
17201201          2             3
*
*htstr        source          interval
17201301        0               3
*
*htstr        temp            mesh pt.
17201401     437.06             4
*
*htstr    left vol    incr  b.cond  sa code  area/factor   ht str no.
17201501   710010000   0       1       1       265.1055        1
17201502   720010000   0       1       1        54.25          2
*
*htstr    right vol   incr  b.cond  sa code  area/factor   ht str no.
17201601   0           0       0       1       265.1055        1
17201602   0           0       0       1        54.25          2
*
*htstr     s. type   s. mult      left heat  right heat    ht str no.
17201701       0         0            0         0            2
*
*crdno   equiv diam  heated len's  grid len's  grid cf's bf ht str no.
17201801     0     99.0   99.0   0.0   0.0   0.0   0.0 1.0   2
*
$*=*=*=*=*=*=*=*=*=*=*=*=*=*=*=*=*=*=*=*=*=*=*=*=*=*=*=*=*=*=*=*=*=*=*=*=*=*=***
$heat structures for steam line c - from steam generator c to steam hdr*
*-----------------------------------------------------------------------*
*htstr   ht strs  m pts  geom  init  l.coord   refl  b.vol  axl. incr
17501000    2       4     2     1     0.9924    0
*
*htstr        mesh locn       mesh fmt
17501100          0             1
```

```
*
*htstr        intervals       rt. coord
17501101          3            1.0833
*
*htstr        compxn no.      interval
17501201          2             3
*
*htstr        source          interval
17501301       0.0              3
*
*htstr                        temp flg
17501400                         0
*
*htstr        temp            mesh pt.
17501401      509.50             4
*
*htstr    left vol    incr  b.cond  sa code  area/factor   ht str no.
17501501   750010000   0       1        1      254.6817         1
17501502   760010000   0       1        1       20.0000         2
*
*htstr    right vol   incr  b.cond  sa code  area/factor   ht str no.
17501601   0           0       0        1      254.6817         1
17501602   0           0       0        1       20.0000         2
*
*htstr     s. type   s. mult      left heat  right heat    ht str no.
17501701       0         0             0          0             2
*
*crdno   equiv diam  heated len's  grid len's  grid cf's bf ht str no.
17501801      0      99.0   99.0   0.0   0.0   0.0   0.0 1.0   2
*
$*=*=*=*=*=*=*=*=*=*=*=*=*=*=*=*=*=*=*=*=*=*=*=*=*=*=*=*=*=*=*=*=*=*=*=*=*=***
$ steam header heat structure                                        *
*-----------------------------------------------------------------------*
*htstr   ht strs  m pts  geom  init  l.coord   refl  b.vol  axl. incr
18001000    1       4     2     1     2.7729    0
*
*htstr        mesh locn       mesh fmt
18001100          0             1
*
*htstr        intervals       rt. coord
18001101          3            3.0021
*
*htstr        compxn no.      interval
18001201          2             3
*
*htstr        source          interval
18001301       0.0              3
*
*htstr                        temp flg
18001400                         0
```

```
*
*htstr        temp            mesh pt.
18001401      508.91              4
*
*htstr     left vol    incr  b.cond  sa code  area/factor   ht str no.
18001501   800010000   0       1        1        15.00          1
*
*htstr     right vol   incr  b.cond  sa code  area/factor   ht str no.
18001601   0           0       0        1        15.00          1
*
*htstr      s. type   s. mult      left heat  right heat    ht str no.
18001701       0         0             0          0             1
*
*crdno   equiv diam  heated len's  grid len's  grid cf's bf ht str no.
18001801      0      99.0   99.0   0.0   0.0   0.0   0.0 1.0   1
*
$*=*=*=*=*=*=*=*=*=*=*=*=*=*=*=*=*=*=*=*=*=*=*=*=*=*=*=*=*=*=*=*=*=*=*=*=*=*=*=***
$heat structure for piping between steam header and turbine stop valves*
*-----------------------------------------------------------------------*
*htstr   ht strs  m pts  geom  init  l.coord   refl  b.vol  axl. incr
18021000    1       4     2     1     1.2313    0
*
*htstr        mesh locn       mesh fmt
18021100          0              1
*
*htstr        intervals       rt. coord
18021101          3             1.3333
*
*htstr        compxn no.      interval
18021201          2              3
*
*htstr        source          interval
18021301        0.0              3
*
*htstr                        temp flg
18021400                         0
*
*htstr        temp            mesh pt.
18021401      507.03              4
*
*htstr     left vol    incr  b.cond  sa code  area/factor   ht str no.
18021501   802010000   0       1        1       256.7220        1
*
*htstr     right vol   incr  b.cond  sa code  area/factor   ht str no.
18021601   0           0       0        1       256.7220        1
*
*htstr      s. type   s. mult      left heat  right heat    ht str no.
18021701       0         0             0          0             1
*
*crdno   equiv diam  heated len's  grid len's  grid cf's bf ht str no.
```

```
18021801      0      99.0   99.0   0.0   0.0   0.0   0.0 1.0   1
*
*
$*=*=*=*=*=*=*=*=*=*=*=*=*=*=*=*=*=*=*=*=*=*=*=*=*=*=*=*=*=*=*=*=*=*=*=*=*=*=*=*=***
$condensate and main feedwater piping heat structures                    *
$*=*=*=*=*=*=*=*=*=*=*=*=*=*=*=*=*=*=*=*=*=*=*=*=*=*=*=*=*=*=*=*=*=*=*=*=*=*=*=*=***
$                ht str no. 8301          lp htr 1                  *
*-----------------------------------------------------------------------*
$l.p. heaters 1 and 2 - heat structures represents only the tube with  $
$                     an internal heat source representing the total $
$                     heat transfered per heater set at full power.  $
*-----------------------------------------------------------------------*
*htstr   ht strs  m pts  geom  init  l.coord   refl  b.vol  axl. incr
18301000    1       4     2     0     0.0220    0
*
*htstr        mesh locn       mesh fmt
18301100          0             1
*
*htstr        intervals       rt. coord
18301101          3             0.0260
*
*htstr        compxn no.      interval
18301201          1             3
*
*htstr        source          interval
18301301        1.0             3
*
*htstr        temp            mesh pt.
18301401      174.92            4
*
*htstr     left vol    incr  b.cond  sa code  area/factor   ht str no.
18301501   830010000   0       1        1       220990.0        1
*
*htstr     right vol   incr  b.cond  sa code  area/factor   ht str no.
18301601   0           0       0        1       220990.0        1
*
*htstr      s. type   s. mult      left heat  right heat    ht str no.
18301701     10870   1.3625e+08       0.0        0.0            1
*
*crdno   equiv diam  heated len's  grid len's  grid cf's bf ht str no.
18301801      0      99.0   99.0   0.0   0.0   0.0   0.0 1.0   1
*
$*=*=*=*=*=*=*=*=*=*=*=*=*=*=*=*=*=*=*=*=*=*=*=*=*=*=*=*=*=*=*=*=*=*=*=*=*=*=*=*=***
$                ht str no. 8302          lp htr 2                  *
*-----------------------------------------------------------------------*
*htstr   ht strs  m pts  geom  init  l.coord   refl  b.vol  axl. incr
18302000    1       4     2     0     0.0272    0
*
*htstr        mesh locn       mesh fmt
18302100          0             1
```

```
*
*htstr        intervals       rt. coord
18302101          3             0.0313
*
*htstr        compxn no.      interval
18302201          2             3
*
*htstr        source          interval
18302301       1.0              3
*
*htstr        temp            mesh pt.
18302401      205.37             4
*
*htstr     left vol    incr  b.cond  sa code  area/factor   ht str no.
18302501   830020000   0       1        1      104494.570       1
*
*htstr     right vol   incr  b.cond  sa code  area/factor   ht str no.
18302601   0           0       0        1      104494.570       1
*
*htstr      s. type   s. mult      left heat  right heat    ht str no.
18302701     10870   7.2674e+07       0.0        0.0            1
*
*crdno   equiv diam  heated len's  grid len's  grid cf's bf ht str no.
18302801      0      99.0   99.0   0.0   0.0   0.0   0.0 1.0   1
*
$*=*=*=*=*=*=*=*=*=*=*=*=*=*=*=*=*=*=*=*=*=*=*=*=*=*=*=*=*=*=*=*=*=*=*=*=*=*=***
$                 ht str no. 8341          htr conn p                  *
*-----------------------------------------------------------------------*
$piping connecting l.p. heaters 2 and 3                                 $
*-----------------------------------------------------------------------*
*htstr   ht strs  m pts  geom  init  l.coord   refl  b.vol  axl. incr
18341000    1       4     2     0     0.8986    0
*
*htstr        mesh locn       mesh fmt
18341100          0             1
*
*htstr        intervals       rt. coord
18341101          3             0.9299
*
*htstr        compxn no.      interval
18341201          2             3
*
*htstr        source          interval
18341301       0.0              3
*
*htstr        temp            mesh pt.
18341401      201.01             4
*
*htstr     left vol    incr  b.cond  sa code  area/factor   ht str no.
18341501   834010000   0       1        1       234.4498        1
```

```
*
*htstr     right vol   incr  b.cond  sa code  area/factor   ht str no.
18341601   0           0       0        1       234.4498        1
*
*htstr      s. type   s. mult      left heat  right heat    ht str no.
18341701       0         0             0          0             1
*
*crdno   equiv diam  heated len's  grid len's  grid cf's bf ht str no.
18341801      0      99.0   99.0   0.0   0.0   0.0   0.0 1.0   1
*
$*=*=*=*=*=*=*=*=*=*=*=*=*=*=*=*=*=*=*=*=*=*=*=*=*=*=*=*=*=*=*=*=*=*=*=*=*=***
$                 ht str no. 8401          lp htr 3                  *
*-----------------------------------------------------------------------*
$l.p. heaters 3,4,and 5 and piping between l.p. heater 5 and pump      $
$suction header. only the tubes are modeled in the heaters.            $
*-----------------------------------------------------------------------*
*htstr   ht strs  m pts  geom  init  l.coord   refl  b.vol  axl. incr
18401000    1       4     2     0     0.0231    0
*
*htstr         mesh locn       mesh fmt
18401100           0              1
*
*htstr         intervals       rt. coord
18401101           3             0.0260
*
*htstr         compxn no.      interval
18401201           1              3
*
*htstr         source          interval
18401301        1.0               3
*
*htstr         temp            mesh pt.
18401401      261.02              4
*
*htstr     left vol    incr  b.cond  sa code  area/factor   ht str no.
18401501   840010000   0       1        1      157658.743       1
*
*htstr     right vol   incr  b.cond  sa code  area/factor   ht str no.
18401601   0           0       0        1      157658.743       1
*
*htstr      s. type   s. mult      left heat  right heat    ht str no.
18401701     10870    1.1495e+08      0.0        0.0            1
*
*crdno   equiv diam  heated len's  grid len's  grid cf's bf ht str no.
18401801      0      99.0   99.0   0.0   0.0   0.0   0.0 1.0   1
*
$*=*=*=*=*=*=*=*=*=*=*=*=*=*=*=*=*=*=*=*=*=*=*=*=*=*=*=*=*=*=*=*=*=*=*=*=*=***
$                 ht str no. 8402          lp htr 4,5                *
*-----------------------------------------------------------------------*
*htstr   ht strs  m pts  geom  init  l.coord   refl  b.vol  axl. incr
```

```
18402000    2       4     2     0     0.0272    0
*
*htstr        mesh locn       mesh fmt
18402100          0             1
*
*htstr        intervals       rt. coord
18402101          3            0.0313
*
*htstr        compxn no.      interval
18402201          1             3
*
*htstr        source          interval
18402301       1.0              3
*
*htstr        temp            mesh pt.
18402401      375.96             4
*
*htstr     left vol    incr  b.cond  sa code  area/factor   ht str no.
18402501   840020000   0       1       1      118777.970       1
18402502   840030000   0       1       1      102432.000       2
*
*htstr     right vol   incr  b.cond  sa code  area/factor   ht str no.
18402601   0           0       0       1      118777.970       1
18402602   0           0       0       1      102432.000       2
*
*htstr      s. type   s. mult      left heat  right heat    ht str no.
18402701     10870    1.1272e+08      0.0        0.0            1
18402702     10870    1.3399e+08      0.0        0.0            2
*
*crdno   equiv diam  heated len's  grid len's  grid cf's bf ht str no.
18402801      0      99.0   99.0   0.0   0.0   0.0   0.0 1.0   2
*
$*=*=*=*=*=*=*=*=*=*=*=*=*=*=*=*=*=*=*=*=*=*=*=*=*=*=*=*=*=*=*=*=*=*=*=*=*=*=***
$                ht str no. 8601          pmp sctn                    *
*-----------------------------------------------------------------------*
$main feedwater pump suction piping heat structure                    $
*-----------------------------------------------------------------------*
*htstr   ht strs  m pts  geom  init  l.coord   refl  b.vol  axl. incr
18601000    1       4     2     0     1.1196    0
*
*htstr        mesh locn       mesh fmt
18601100          0             1
*
*htstr        intervals       rt. coord
18601101          3            1.1623
*
*htstr        compxn no.      interval
18601201          2             3
*
*htstr        source          interval
```

```
18601301        0.0              3
*
*htstr         temp            mesh pt.
18601401      369.87             4
*
*htstr     left vol    incr  b.cond  sa code  area/factor   ht str no.
18601501   860010000   0       1        1        241.0039       1
*
*htstr     right vol   incr  b.cond  sa code  area/factor   ht str no.
18601601   0           0       0        1        241.0039       1
*
*htstr      s. type   s. mult      left heat  right heat    ht str no.
18601701       0         0             0          0             1
*
*crdno   equiv diam  heated len's  grid len's  grid cf's bf ht str no.
18601801      0      99.0   99.0   0.0   0.0   0.0   0.0 1.0   1
*
$*=*=*=*=*=*=*=*=*=*=*=*=*=*=*=*=*=*=*=*=*=*=*=*=*=*=*=*=*=*=*=*=*=*=*=*=*=*=***
$                 ht str no.  862          pmp disch line a           *
*-----------------------------------------------------------------------*
$mfw pump outlet piping                                                $
*-----------------------------------------------------------------------*
*htstr   ht strs  m pts  geom  init  l.coord   refl  b.vol  axl. incr
18621000    1       4     2     0     0.7266    0
*
*htstr         mesh locn       mesh fmt
18621100           0              1
*
*htstr         intervals       rt. coord
18621101           3             0.8333
*
*htstr         compxn no.      interval
18621201           2              3
*
*htstr         source          interval
18621301        0.0               3
*
*htstr         temp            mesh pt.
18621401      370.84             4
*
*htstr     left vol    incr  b.cond  sa code  area/factor   ht str no.
18621501   862010000   0       1        1         50.0          1
*
*htstr     right vol   incr  b.cond  sa code  area/factor   ht str no.
18621601   0           0       0        1         50.0          1
*
*htstr      s. type   s. mult      left heat  right heat    ht str no.
18621701       0         0             0          0             1
*
*crdno   equiv diam  heated len's  grid len's  grid cf's bf ht str no.
```

```
18621801      0      99.0   99.0   0.0   0.0   0.0   0.0 1.0   1
*
$*=*=*=*=*=*=*=*=*=*=*=*=*=*=*=*=*=*=*=*=*=*=*=*=*=*=*=*=*=*=*=*=*=*=*=*=*=*=***
$                ht str no.  865          pmp disch line b           *
*-----------------------------------------------------------------------*
$mfw pump outlet piping                                                 $
*-----------------------------------------------------------------------*
*htstr   ht strs  m pts  geom  init  l.coord   refl  b.vol  axl. incr
18651000    1       4     2     0     0.7266    0
*
*htstr        mesh locn       mesh fmt
18651100          0              1
*
*htstr        intervals       rt. coord
18651101          3             0.8333
*
*htstr        compxn no.      interval
18651201          2              3
*
*htstr        source          interval
18651301       0.0               3
*
*htstr        temp            mesh pt.
18651401      370.84             4
*
*htstr     left vol    incr  b.cond  sa code  area/factor   ht str no.
18651501   865010000   0       1        1         50.0          1
*
*htstr     right vol   incr  b.cond  sa code  area/factor   ht str no.
18651601   0           0       0        1         50.0          1
*
*htstr      s. type   s. mult      left heat  right heat    ht str no.
18651701       0         0             0          0             1
*
*crdno   equiv diam  heated len's  grid len's  grid cf's bf ht str no.
18651801      0      99.0   99.0   0.0   0.0   0.0   0.0 1.0   1
*
$*=*=*=*=*=*=*=*=*=*=*=*=*=*=*=*=*=*=*=*=*=*=*=*=*=*=*=*=*=*=*=*=*=*=*=*=*=*=***
$                ht str no.  867          pmp disch combined lines   *
*-----------------------------------------------------------------------*
$mfw pump outlet piping                                                 $
*-----------------------------------------------------------------------*
*htstr   ht strs  m pts  geom  init  l.coord   refl  b.vol  axl. incr
18671000    1       4     2     0     1.0275    0
*
*htstr        mesh locn       mesh fmt
18671100          0              1
*
*htstr        intervals       rt. coord
18671101          3             1.1343
```

```
*
*htstr        compxn no.      interval
18671201          2              3
*
*htstr        source          interval
18671301       0.0              3
*
*htstr        temp            mesh pt.
18671401      370.84            4
*
*htstr    left vol    incr  b.cond  sa code  area/factor   ht str no.
18671501   867010000   0       1        1         48.0          1
*
*htstr    right vol   incr  b.cond  sa code  area/factor   ht str no.
18671601   0           0       0        1         48.0          1
*
*htstr     s. type   s. mult      left heat  right heat    ht str no.
18671701       0         0             0          0             1
*
*crdno   equiv diam  heated len's  grid len's  grid cf's bf ht str no.
18671801      0      99.0   99.0   0.0   0.0   0.0   0.0 1.0   1
*
$*=*=*=*=*=*=*=*=*=*=*=*=*=*=*=*=*=*=*=*=*=*=*=*=*=*=*=*=*=*=*=*=*=*=*=*=*=***
$                ht str no. 8741          hp htr                    *
*-----------------------------------------------------------------------*
$h.p. heater heat structure modeling                                    $
*-----------------------------------------------------------------------*
*htstr   ht strs  m pts  geom  init  l.coord   refl  b.vol  axl. incr
18741000    1       4     2     0     0.0231    0
*
*htstr        mesh locn       mesh fmt
18741100          0              1
*
*htstr        intervals       rt. coord
18741101          3             0.0260
*
*htstr        compxn no.      interval
18741201          1              3
*
*htstr        source          interval
18741301       1.0              3
*
*htstr        temp            mesh pt.
18741401      444.20            4
*
*htstr    left vol    incr  b.cond  sa code  area/factor   ht str no.
18741501   874010000   0       1        1       238700.0        1
*
*htstr    right vol   incr  b.cond  sa code  area/factor   ht str no.
18741601   0           0       0        1       238700.0        1
```

```
*
*htstr      s. type   s. mult      left heat  right heat    ht str no.
18741701     10870    2.1338e+08      0.0        0.0            1
*
*crdno   equiv diam  heated len's  grid len's  grid cf's bf ht str no.
18741801      0      99.0   99.0   0.0   0.0   0.0   0.0 1.0   1
*
$*=*=*=*=*=*=*=*=*=*=*=*=*=*=*=*=*=*=*=*=*=*=*=*=*=*=*=*=*=*=*=*=*=*=*=*=*=*=*=*=***
$                ht str no. 8781          header                    *
*-----------------------------------------------------------------------*
$h.p. heater outlet piping and mfw header                              $
*-----------------------------------------------------------------------*
*htstr   ht strs  m pts  geom  init  l.coord   refl  b.vol  axl. incr
18781000    1       4     2     0     1.0275    0
*
*htstr         mesh locn       mesh fmt
18781100           0              1
*
*htstr         intervals       rt. coord
18781101           3             1.1343
*
*htstr         compxn no.      interval
18781201           2              3
*
*htstr         source          interval
18781301        0.0               3
*
*htstr         temp            mesh pt.
18781401      437.44              4
*
*htstr     left vol    incr  b.cond  sa code  area/factor   ht str no.
18781501   878010000   0       1        1       46.6815         1
*
*htstr     right vol   incr  b.cond  sa code  area/factor   ht str no.
18781601   0           0       0        1       46.6815         1
*
*htstr      s. type   s. mult      left heat  right heat    ht str no.
18781701       0         0             0          0             1
*
*crdno   equiv diam  heated len's  grid len's  grid cf's bf ht str no.
18781801      0      99.0   99.0   0.0   0.0   0.0   0.0 1.0   1
*
*
$*=*=*=*=*=*=*=*=*=*=*=*=*=*=*=*=*=*=*=*=*=*=*=*=*=*=*=*=*=*=*=*=*=*=*=*=*=*=*=*=***
$                                                    *
$                    material properties                        *
$                                                    *
$*=*=*=*=*=*=*=*=*=*=*=*=*=*=*=*=*=*=*=*=*=*=*=*=*=*=*=*=*=*=*=*=*=*=*=*=*=*=*=*=***
*                                                    *
*     all conductivity values are in units of  btu/sec-ft-degf         *
```

```
*     all volumetric heat capacity values are in   btu/ft3-degf        *
*                                                                      *
*=*=*=
```

```
*crdno          temperature       vol ht cap
20100251          32.00            57.29
20100252          80.00            57.29
20100253         200.03            57.29
20100254        1600.07            82.04
20100255        2600.33           104.71
20100256        2960.33           112.49
*
*=*=*=*=*=*=*=*=*=*=*=*=*=*=*=*=*=*=*=*=*=*=*=*=*=*=*=*=*=*=*=***
*  thermal properties of inconel 600 - composition 3  *
*=*=*=*=*=*=*=*=*=*=*=*=*=*=*=*=*=*=*=*=*=*=*=*=*=*=*=*=*=*=*=***
*
*crdno   mtrl type      th.con    ht.cap        material
20100300 tbl/fctn         1         1          * inconel 600
*
*      thermal properties of inconel 600
*
*
*crdno          temperature       th.cond
20100302          100.0            0.00236
20100303          300.0            0.00267
20100304          500.0            0.00294
20100305          700.0            0.00322
20100306          900.0            0.00350
20100307         1100.0            0.00378
*
*crdno          temperature       vol ht cap
20100351                          52.225
*
*=*=*=*=*=*=*=*=*=*=*=*=*=*=*=*=*=*=*=*=*=*=*=*=*=*=*=*=*=*=*=
*  thermal properties of cladding - composition 4  *
*=*=*=*=*=*=*=*=*=*=*=*=*=*=*=*=*=*=*=*=*=*=*=*=*=*=*=*=*=*=*=
*
*crdno   mtrl type      th.con    ht.cap        material
20100400 tbl/fctn         1         1          * cladding
*
*        thermal properties of cladding
*
*
*crdno          temperature       th.cond
20100401          32.              1.9267e-3
20100402         392.0             1.9267e-3
20100403         752.0             2.2478e-3
20100404        1112.0             2.7297e-3
20100405        1472.0             3.0508e-3
20100406        1832.0             3.5325e-3
20100407        2192.0             4.0142e-3
20100408        2552.0             4.8169e-3
20100409        2912.0             5.7803e-3
20100410        3272.0             7.0647e-3
```

```
20100411          3632.0            8.8311e-3
20100412          3992.0            1.0918e-2
*
*crdno          temperature       vol ht cap
20100451            0.0            28.392
20100452          1480.3            34.476
20100453          1675.00            85.176
20100454          1787.5            34.370
20100455          3500.0            34.476
*
*
*=*=*=*=*=*=*=*=*=*=*=*=*=*=*=*=*=*=*=*=*=*=*=*=*=*=*=*=*=***
*  thermal properties of uo2 - composition 5  *
*=*=*=*=*=*=*=*=*=*=*=*=*=*=*=*=*=*=*=*=*=*=*=*=*=*=*=*=*=***
*
*crdno   mtrl type      th.con    ht.cap        material
20100500 tbl/fctn         1         1          * uo2
*
*          thermal properties of uo2
*
*
*crdno          temperature       th.cond
20100501            32.0            1.284e-3
20100502           188.6            1.284e-3
20100503           332.6            1.1235e-3
20100504           440.6            9.951e-4
20100505           500.0            9.2806e-4
20100506           650.0            7.4194e-4
20100507           800.0            7.4361e-4
20100508           897.0            5.8390e-4
20100509          1104.0            5.2310e-4
20100510          1213.0            4.9200e-4
20100511          1326.0            4.6710e-4
20100512          1684.0            4.4700e-4
20100513          1700.0            4.4701e-4
20100514          1850.0            4.5528e-4
20100515          2000.0            4.3556e-4
20100516          2150.0            4.1861e-4
20100517          2300.0            4.0472e-4
20100518          2450.0            3.9306e-4
20100519          2600.0            3.8389e-4
20100520          3100.0            3.6750e-4
20100521          3600.0            3.7028e-4
20100522          4100.0            3.9056e-4
20100523          4600.0            4.2722e-4
20100524          5100.0            4.8056e-4
*
*crdno          temperature       vol ht cap
20100551            32.0            34.45
20100552           122.0            38.35
```

```
20100553          212.0          40.95
20100554          392.0          43.55
20100555          752.0          46.80
20100556         2012.0           51.35
20100557         2732.0           52.65
20100558         3092.0           56.55
20100559         3452.0           63.05
20100560         3812.0           72.80
20100561         4352.0           89.70
20100562         4532.0           94.25
20100563         4712.0           98.15
20100564         4892.0          100.10
20100565         5144.0          101.40
20100566         8000.0          101.40
*
*=*=*=*=*=*=*=*=*=*=*=*=*=*=*=*=*=*=*=*=*=*=*=*=*=*=*=*=*=*=*=*=*=*=*=*=*=**
*  thermal properties of fuel gap(average core) - composition 6  *
*=*=*=*=*=*=*=*=*=*=*=*=*=*=*=*=*=*=*=*=*=*=*=*=*=*=*=*=*=*=*=*=*=*=*=*=*=**
*
*crdno   mtrl type      th.con    ht.cap        material
20100600 tbl/fctn         1         1          * fuel gap
*
*        thermal properties of fuel gap
*
*
*crdno           temperature        th.cond
20100601             32.0            0.00031
20100602           5400.0             0.00031
*
*crdno           temperature        vol ht cap
20100651             32.0            0.000075
20100652           5400.0             0.000075
*
*=*=*=*=*=*=*=*=*=*=*=*=*=*=*=*=*=*=*=*=*=*=*=*=*=*=*=*=*=*=*=*=*=*=*=***
*  thermal properties of air - composition 7  *
*=*=*=*=*=*=*=*=*=*=*=*=*=*=*=*=*=*=*=*=*=*=*=*=*=*=*=*=*=*=*=*=*=*=*=***
*
*crdno   mtrl type      th.con    ht.cap        material
20100700 tbl/fctn         1         1          *   air
*
*         thermal properties of air
*
*
*crdno           temperature        th.cond
20100701             80.0           4.222e-6
20100702            100.0           4.333e-6
20100703            150.0           4.639e-6
20100704            200.0           4.972e-6
20100705            250.0           5.306e-6
20100706            300.0           5.639e-6
```

```
20100707          400.0          6.250e-6
20100708          500.0          6.833e-6
20100709          600.0          7.500e-6
20100710          800.0          8.417e-6
20100711         1000.0           9.361e-6
20100712         1500.0           1.133e-5
*
*crdno          temperature       vol ht cap
20100751          80.0            0.0176
20100752          100.0            0.0170
20100753          150.0            0.0157
20100754          200.0            0.0145
20100755          250.0            0.0135
20100756          300.0            0.0127
20100757          400.0            0.0113
20100758          500.0            0.0102
20100759          600.0            9.3874e-3
20100760          800.0            8.0955e-3
20100761         1000.0             7.1536e-3
20100762         1500.0             5.6231e-3
*
*=*=*=*=*=*=*=*=*=*=*=*=*=*=*=*=*=*=*=*=*=*=*=*=*=*=*=*=*=*=*=*=*=*=*=*=*=*=*
*  thermal properties of mgo(prz. heaters) - composition 8  *
*=*=*=*=*=*=*=*=*=*=*=*=*=*=*=*=*=*=*=*=*=*=*=*=*=*=*=*=*=*=*=*=*=*=*=*=*=*=*
*
*crdno   mtrl type      th.con    ht.cap        material
20100800 tbl/fctn         1         1           * mgo
*
*        thermal properties of mgo
*
*
*crdno          temperature       th.cond
20100801          68.09            0.0001324
20100802         1832.09            0.0001703
*
*crdno          temperature       vol ht cap
20100851          350.3             42.31
20100852          980.3             50.77
20100853         1556.3              55.60
*
$*=*=*=*=*=*=*=*=*=*=*=*=*=*=*=*=*=*=*=*=*=*=*=*=*=*=*=*=*=*=*=*=*=*=*=*=*=*=***
$         general tables
*-----------------------------------------------------------------*
*
*=*=*=*=*=*=*=*=*=*=*=*=*=*=*=*=*=*=*=*=*=*=*=*=*=*=*=*=*=*=*=*=*=*=*=*=*=*=*=
*      core power and power decay table                          *
*=*=*=*=*=*=*=*=*=*=*=*=*=*=*=*=*=*=*=*=*=*=*=*=*=*=*=*=*=*=*=*=*=*=*=*=*=*=*=
*
*crdno   table type     trip no.       factor 1  factor 2  factor 3
20210000    power         696            1.0     2300.00
```

```
*
*decay power table
**
**card        sec      normalized power
20210001      -1.          1.0
20210002       0.          1.0
20210003       0.11717     0.99166
20210004       0.20492     0.97301
20210005       0.24145     0.95863
20210006       0.26331     0.94534
20210007       0.28517     0.92994
20210008       0.30704     0.91650
20210009       0.35813     0.88412
20210010       0.36532     0.87520
20210011       0.37989     0.85392
20210012       0.40163     0.83010
20210013       0.41618     0.81372
20210014       0.43067     0.79545
20210015       0.45971     0.76110
20210016       0.50334     0.71526
20210017       0.53968     0.67173
20210018       0.56860     0.61866
20210019       0.58307     0.58592
20210020       0.61183     0.53450
20210021       0.65542     0.47910
20210022       0.69896     0.42724
20210023       0.74981     0.37056
20210024       0.82253     0.29186
20210025       0.88058     0.23361
20210026       0.93898     0.18983
20210027       0.98267     0.16209
20210028       1.04833     0.12904
20210029       1.15803     0.10058
20210030       1.47289     0.07646
20210031       1.83910     0.06706
20210032       2.23468     0.06131
20210033       2.62293     0.05776
20210034       3.04782     0.05510
20210035       3.41411     0.05298
20210036       3.80968     0.04968
20210037       4.25654     0.04651
20210038       4.62283     0.04530
20210039       5.01111     0.04465
20210040       5.58253     0.04327
20210041       6.03673     0.04182
20210042       6.60815     0.03969
20210043       7.37734     0.03624
20210044       7.78027     0.03485
20210045       100.        .0331
20210046       400.        .0235
```

```
20210047      800.       .0196
20210048      1000.      .0185
20210049      2000.      .0157
20210050      4000.      .0128
20210051      8000.      .0105
20210052      10000.     .00965
20210053      20000.     .00795
20210054      60000.     .00566
20210055      100000.    .00475
**
$*=*=*=*=*=*=*=*=*=*=*=*=*=*=*=*=*=*=*=*=*=*=*=*=*=*=*=*=*=*=*=*=*=*=*=*=*=*=**
$                table no. 197 - # loops sp
*-----------------------------------------------------------------------
*table      table type   trip no.    factor 1    factor 2
20219700      reac-t
*
*table                    time              reactivity
20219701                    0.09999           4.0
20219702                    0.10              2.0
20219703                    0.39999           2.0
20219704                    0.40              1.0
*
$*=*=*=*=*=*=*=*=*=*=*=*=*=*=*=*=*=*=*=*=*=*=*=*=*=*=*=*=*=*=*=*=*=*=*=*=*=*=***
$                table no. 500 - sfty diff
*-----------------------------------------------------------------------*
*table      table type   trip no.    factor 1    factor 2
20250000      reac-t
*
*table                    time              power
20250001                  1041.59999          0.0
20250002                  1041.60000          0.167
20250003                  1060.79999          0.172
20250004                  1060.80000          0.339
20250005                  1079.99999          0.348
20250006                  1080.00000          0.590
20250007                  1084.99999          0.594
20250008                  1085.00000          0.464
20250009                  1094.39999          0.470
20250010                  1094.40000          0.712
20250011                  1104.99999          0.854
20250012                  1105.00000          0.854
20250013                  1124.99999          0.604
20250014                  1125.00000          0.415
20250015                  1139.99999          0.422
20250016                  1140.00000          0.234
20250017                  1193.49999          0.242
20250018                  1193.50000          0.187
20250019                  1215.49999          0.193
20250020                  1215.50000          0.138
20250021                  1237.49999          0.149
```

```
20250022              1237.50000          0.069
20250023              1254.00000          0.081
$*=*=*=*=*=*=*=*=*=*=*=*=*=*=*=*=*=*=*=*=*=*=*=*=*=*=*=*=*=*=*=*=*=*=*=*=*=*=*=***
$              table no. 501 - sfty low
*-----------------------------------------------------------------*
*table      table type   trip no.    factor 1    factor 2
20250100      reac-t
*
*table                  time              power
20250101              1041.59999          0.0
20250102              1041.60000          0.0
20250103              1060.79999          0.0
20250104              1060.80000          0.0
20250105              1079.99999          0.0
20250106              1080.00000          0.0
20250107              1084.99999          0.0
20250108              1085.00000          0.130
20250109              1094.39999          0.132
20250110              1094.40000          0.132
20250111              1104.99999          0.133
20250112              1105.00000          0.263
20250113              1124.99999          0.270
20250114              1125.00000          0.459
20250115              1139.99999          0.467
20250116              1140.00000          0.655
20250117              1193.49999          0.699
20250118              1193.50000          0.754
20250119              1215.49999          0.769
20250120              1215.50000          0.824
20250121              1237.49999          0.835
20250122              1237.50000          0.915
20250123              1254.00000          0.919
*
$*=*=*=*=*=*=*=*=*=*=*=*=*=*=*=*=*=*=*=*=*=*=*=*=*=*=*=*=*=*=*=*=*=*=*=*=*=*=*=**
$              table no. 808 - stm dump n
*-----------------------------------------------------------------*
*table      table type   trip no.    factor 1    factor 2
20280800      normarea
*
*table                  length            area
20280801                 0.0              0.0000
20280802                 0.2              0.2005
20280803                 0.4              0.4002
20280804                 0.6              0.6002
20280805                 0.8              0.8002
20280806                 1.0              1.0000
*
$*=*=*=*=*=*=*=*=*=*=*=*=*=*=*=*=*=*=*=*=*=*=*=*=*=*=*=*=*=*=*=*=*=*=*=*=*=*=*=***
$              table no. 900 - trip table
*-----------------------------------------------------------------
```

```
*table      table type   trip no.    factor 1    factor 2
20290000       reac-t
*
*table                    time              reactivity
20290001                -1.0e-99              0.0
20290002                  0.0                 1.0
*
$*=*=*=
```

```
20500313                19.75          rho       278010000
20500314                19.68          rho       282010000
$*=*=*=*=*=*=*=*=*=*=*=*=*=*=*=*=*=*=*=*=*=*=*=*=*=*=*=*=*=*=*=*=*=*=*=*=*=*=***
$ steam generator b                                          *
*-----------------------------------------------------------------------*
*ctlvar     name       type     factor    init   f c
20500500 "sg mass"      sum        2.2    93260. 0 0
*
*ctlvar          a0       coeff       variable name  parameter no.
20500501         0.0       15.52          rho        354010000
20500502                 5.11          rho       358010000
20500503                 3.98          rho       362010000
20500504                 1.26          rho       362020000
20500505                 1.26          rho       362030000
20500506                 0.97          rho       362040000
20500507                 7.90          rho       366010000
20500508                10.26          rho       366020000
20500509                10.40          rho       366030000
20500510                10.74          rho       366040000
20500511                10.73          rho       370010000
20500512                14.17          rho       374010000
20500513                19.75          rho       378010000
20500514                19.68          rho       382010000
$*=*=*=*=*=*=*=*=*=*=*=*=*=*=*=*=*=*=*=*=*=*=*=*=*=*=*=*=*=*=*=*=*=*=*=*=*=*=***
$ steam generator c                                          *
*-----------------------------------------------------------------------*
*ctlvar     name       type     factor    init   f c
20500700 "sg mass"      sum        2.2    93260. 0 0
*
*ctlvar          a0       coeff       variable name  parameter no.
20500701         0.0       15.52          rho        454010000
20500702                 5.11          rho       458010000
20500703                 3.98          rho       462010000
20500704                 1.26          rho       462020000
20500705                 1.26          rho       462030000
20500706                 0.97          rho       462040000
20500707                 7.90          rho       466010000
20500708                10.26          rho       466020000
20500709                10.40          rho       466030000
20500710                10.74          rho       466040000
20500711                10.73          rho       470010000
20500712                14.17          rho       474010000
20500713                19.75          rho       478010000
20500714                19.68          rho       482010000
$*=*=*=*=*=*=*=*=*=*=*=*=*=*=*=*=*=*=*=*=*=*=*=*=*=*=*=*=*=*=*=*=*=*=*=*=*=*=**
$the following control variables are used to prevent excessive cpu/real
$time ratios from occurring.  the documentation is on pages 8-12.
*-----------------------------------------------------------------------
*ctlvar     name       type     factor    init   f c
20501900 "cpu intr"   sum       1.0      0.0    0
```

```
*
*ctlvar          a0      coeff       variable name  parameter no.
20501901         0.0       1.0           cputime          0
20501902                  -1.0          cntrlvar        024
$*=*=*=
```

```
20502601     time          0          cntrlvar       021
$*=*=*=*=*=*=*=*=*=*=*=*=*=*=*=*=*=*=*=*=*=*=*=*=*=*=*=*=*=*=*=*=*=*=*=*=**
*ctlvar     name      type    factor   init   f c
20502700 "time bia"  stdfnctn   1.0     0.0   1
*
*ctlvar     function
20502701      max
*ctlvar  variable name  parameter no.   variable name  parameter no.
20502702   cntrlvar        026          cntrlvar        027
$*=*=*=*=*=*=*=*=*=*=*=*=*=*=*=*=*=*=*=*=*=*=*=*=*=*=*=*=*=*=*=*=*=*=*=*=**
*ctlvar     name      type    factor   init   f c
20502800 "cpu/real"    div      1.0     0.0   0
*
*ctlvar  divisor name   divisor no.    dividend name  dividend no.
20502801   cntrlvar        025          cntrlvar        019
$*=*=*=*=*=*=*=*=*=*=*=*=*=*=*=*=*=*=*=*=*=*=*=*=*=*=*=*=*=*=*=*=*=*=*=*=**
*ctlvar     name      type    factor   init   f c
20502900 "cpu rati"    mult     1.0     0.0   0
*
*ctlvar  variable name  parameter no.   variable name  parameter no.
20502901   cntrlvar        021          cntrlvar        028
$*=*=*=*=*=*=*=*=*=*=*=*=*=*=*=*=*=*=*=*=*=*=*=*=*=*=*=*=*=*=*=*=*=*=*=*=**
$the following set of control variables are used to stop the calcula-
$tion if the number of consecutive calculations at or below the user-
$specified time step size exceeds the desired number.  documentation
$can be found on pages 13-15.
*-----------------------------------------------------------------
*ctlvar     name      type    factor   init   f c
20503000 "min t er"    sum      1.0     0.0   0
*
*ctlvar          a0      coeff       variable name  parameter no.
20503001        1.0e-5    -1.0          cntrlvar        001
$*=*=*=*=*=*=*=*=*=*=*=*=*=*=*=*=*=*=*=*=*=*=*=*=*=*=*=*=*=*=*=*=*=*=*=*=**
*ctlvar     name      type    factor   init   f c     max    max
20503100 "tim trip"   function   1.0e99   0.0   0 2     1.0
*
*ctlvar     srch arg. name   srch arg. no.        table no.
20503101       cntrlvar          030                900
$*=*=*=*=*=*=*=*=*=*=*=*=*=*=*=*=*=*=*=*=*=*=*=*=*=*=*=*=*=*=*=*=*=*=*=*=**
*ctlvar     name      type    factor   init   f c
20503200 "t trp co"   sum      1.0      1.0   0
*
*ctlvar          a0      coeff       variable name  parameter no.
20503201         1.0      -1.0          cntrlvar        031
$*=*=*=*=*=*=*=*=*=*=*=*=*=*=*=*=*=*=*=*=*=*=*=*=*=*=*=*=*=*=*=*=*=*=*=*=**
*ctlvar     name      type    factor   init   f c     min
20503300 "t trp su"    sum      1.0     0.0   0 1     0.0
*
*ctlvar          a0      coeff       variable name  parameter no.
20503301         0.0       1.0          cntrlvar        031
```

```
20503302                 1.0          cntrlvar        033
20503303                -1.0          cntrlvar        034
$*=*=*=*=*=*=*=*=*=*=*=*=*=*=*=*=*=*=*=*=*=*=*=*=*=*=*=*=*=*=*=*=*=*=*=*=*=*=**
*ctlvar     name       type     factor    init   f c
20503400 "step bia"    mult      1.0      0.0    0
*
*ctlvar  variable name  parameter no.    variable name  parameter no.
20503401    cntrlvar        032           cntrlvar        033
$*=*=*=*=*=*=*=*=*=*=*=*=*=*=*=*=*=*=*=*=*=*=*=*=*=*=*=*=*=*=*=*=*=*=*=*=*=*=**
$the following control variables are used to regulate the rcp speed in $
$the s/s initialization phase to obtain the desired primary loop flow. $
*-----------------------------------------------------------------------*
*ctlvar     name       type     factor    init   f c
20504900 "rcp m er"    sum      2.2046    0.0    0
*
*ctlvar           a0       coeff        variable name  parameter no.
20504901       12725.783    -1.0            mflowj       120010000
20504902                   -1.0            mflowj       120020000
20504903                   -1.0            mflowj       120030000
$*=*=*=*=*=*=*=*=*=*=*=*=*=*=*=*=*=*=*=*=*=*=*=*=*=*=*=*=*=*=*=*=*=*=*=*=*=*=***
*ctlvar     name       type     factor    init   f c     min    max
20505000 "rcp spee"  integral  2.931e-2 1190.0   0 3     0.0   1300.0
*
*ctlvar     integrand name   integrand no.
20505001        cntrlvar           049
$*=*=*=*=*=*=*=*=*=*=*=*=*=*=*=*=*=*=*=*=*=*=*=*=*=*=*=*=*=*=*=*=*=*=*=*=*=*=***
$the following control variable is core differential temperature       $
*-----------------------------------------------------------------------*
*ctlvar     name       type     factor    init   f c
20506000 "core dt "    sum      1.8000    0.0    0
*
*ctlvar           a0       coeff        variable name  parameter no.
20506001          0.0        1.0             tempf        118010000
20506002                    -1.0            tempf        112010000
$*=*=*=*=*=*=*=*=*=*=*=*=*=*=*=*=*=*=*=*=*=*=*=*=*=*=*=*=*=*=*=*=*=*=*=*=*=*=***
$the following control variable is normalized reactor power.  documen-
$tation is on page 16.
*-----------------------------------------------------------------------
*ctlvar     name       type     factor    init   f c
20510000 "n rx pow" function 4.34783e-10 1.0    0
*
*ctlvar     srch arg. name   srch arg. no.         table no.
20510001          time              0                 100
$*=*=*=*=*=*=*=*=*=*=*=*=*=*=*=*=*=*=*=*=*=*=*=*=*=*=*=*=*=*=*=*=*=*=*=*=*=*=**
$the following control variables calculate the primary average temp-
$eratures.  documentation is on pages 17-18.
*-----------------------------------------------------------------------
*ctlvar     name       type     factor    init   f c
20510100   "a tavg"     sum       1.0     575.4   1
*
```

```
*ctlvar          a0      coeff       variable name  parameter no.
20510101      -459.67      0.9            tempf       204040000
20510102                   0.9            tempf       216010000
$*=*=*=*=*=*=*=*=*=*=*=*=*=*=*=*=*=*=*=*=*=*=*=*=*=*=*=*=*=*=*=*=*=*=*=*=*=*=*=**
*ctlvar     name      type     factor    init   f c
20510200   "b tavg"     sum       1.0     575.4   1
*
*ctlvar          a0      coeff       variable name  parameter no.
20510201      -459.67      0.9            tempf       304040000
20510202                   0.9            tempf       316010000
$*=*=*=*=*=*=*=*=*=*=*=*=*=*=*=*=*=*=*=*=*=*=*=*=*=*=*=*=*=*=*=*=*=*=*=*=*=*=*=**
*ctlvar     name      type     factor    init   f c
20510300   "c tavg"     sum       1.0     575.4   1
*
*ctlvar          a0      coeff       variable name  parameter no.
20510301      -459.67      0.9            tempf       405010000
20510302                   0.9            tempf       416010000
$*=*=*=*=*=*=*=*=*=*=*=*=*=*=*=*=*=*=*=*=*=*=*=*=*=*=*=*=*=*=*=*=*=*=*=*=*=*=*=**
*ctlvar     name      type     factor    init   f c
20510400 "high tav"  stdfnctn    1.0     575.4   1
*
*ctlvar     function
20510401      max
*ctlvar  variable name  parameter no.    variable name  parameter no.
20510402    cntrlvar        101            cntrlvar        102
20510403    cntrlvar        103
$*=*=*=*=*=*=*=*=*=*=*=*=*=*=*=*=*=*=*=*=*=*=*=*=*=*=*=*=*=*=*=*=*=*=*=*=*=*=*=**
$the following control variables determine the number of loops that
$have a tavg .le. 543f.  if 2/3 (2 out of 3) loops have a low tavg a
$1/2 trip status is satisfied for msiv closure.  documentation is
$on pages 19-20.
*-----------------------------------------------------------------------
*ctlvar     name      type     factor    init   f c
20510500 "543-atav"    sum       1.0      0.0    0
*
*ctlvar          a0      coeff       variable name  parameter no.
20510501        543.0     -1.0           cntrlvar        101
$*=*=*=*=*=*=*=*=*=*=*=*=*=*=*=*=*=*=*=*=*=*=*=*=*=*=*=*=*=*=*=*=*=*=*=*=*=*=*=**
*ctlvar     name      type     factor    init   f c     max    max
20510600 "543>atav"  function   1.0e99    0.0    0 2     1.0
*
*ctlvar     srch arg. name   srch arg. no.        table no.
20510601       cntrlvar          105                900
$*=*=*=*=*=*=*=*=*=*=*=*=*=*=*=*=*=*=*=*=*=*=*=*=*=*=*=*=*=*=*=*=*=*=*=*=*=*=*=**
*ctlvar     name      type     factor    init   f c
20510700 "543-btav"    sum       1.0      0.0    0
*
*ctlvar          a0      coeff       variable name  parameter no.
20510701        543.0     -1.0           cntrlvar        102
$*=*=*=*=*=*=*=*=*=*=*=*=*=*=*=*=*=*=*=*=*=*=*=*=*=*=*=*=*=*=*=*=*=*=*=*=*=*=*=**
```

```
*ctlvar     name       type     factor    init   f c     max    max
20510800 "543>btav"  function   1.0e99    0.0    0 2     1.0
*
*ctlvar     srch arg. name   srch arg. no.         table no.
20510801        cntrlvar           107                900
$*=*=*=*=*=*=*=*=*=*=*=*=*=*=*=*=*=*=*=*=*=*=*=*=*=*=*=*=*=*=*=*=*=*=*=*=*=*=*=*=**
*ctlvar     name       type     factor    init   f c
20510900 "543-ctav"    sum       1.0      0.0    0
*
*ctlvar           a0       coeff        variable name  parameter no.
20510901         543.0      -1.0            cntrlvar         103
$*=*=*=*=*=*=*=*=*=*=*=*=*=*=*=*=*=*=*=*=*=*=*=*=*=*=*=*=*=*=*=*=*=*=*=*=*=*=*=*=**
*ctlvar     name       type     factor    init   f c     max    max
20511000 "543>ctav"  function   1.0e99    0.0    0 2     1.0
*
*ctlvar     srch arg. name   srch arg. no.         table no.
20511001        cntrlvar           109                900
$*=*=*=*=*=*=*=*=*=*=*=*=*=*=*=*=*=*=*=*=*=*=*=*=*=*=*=*=*=*=*=*=*=*=*=*=*=*=*=*=**
*ctlvar     name       type     factor    init   f c
20511100 "# low ta"   sum       1.0      0.0    0
*
*ctlvar           a0       coeff        variable name  parameter no.
20511101          0.0        1.0            cntrlvar         106
20511102                     1.0            cntrlvar         108
20511103                     1.0            cntrlvar         110
$*=*=*=*=*=*=*=*=*=*=*=*=*=*=*=*=*=*=*=*=*=*=*=*=*=*=*=*=*=*=*=*=*=*=*=*=*=*=*=*=**
$the following control variable calculates the setpoint average temp-
$erature.  documentation is on pages 21-22.
*-----------------------------------------------------------------
$*=*=*=*=*=*=*=*=*=*=*=*=*=*=*=*=*=*=*=*=*=*=*=*=*=*=*=*=*=*=*=*=*=*=*=*=*=*=*=*=**
*ctlvar     name       type     factor    init   f c     min    max
20511500    "tref"      sum       1.0     575.4   1 3    540.0 615.0
*
*ctlvar           a0       coeff        variable name  parameter no.
20511501        546.224   7.65622e-6          p          806010000
$*=*=*=*=*=*=*=*=*=*=*=*=*=*=*=*=*=*=*=*=*=*=*=*=*=*=*=*=*=*=*=*=*=*=*=*=*=*=*=*=**
$*=*=*=*=*=*=*=*=*=*=*=*=*=*=*=*=*=*=*=*=*=*=*=*=*=*=*=*=*=*=*=*=*=*=*=*=*=*=*=*=**
$the following control variables calculate the reactor over-temperature
$delta t trip status.  documentation is on pages 23-25.  the a loop
$logic is in 121-126, the b and c loops control variables are 131-136
$and 141-146, respectively.
*-----------------------------------------------------------------
*ctlvar     name       type     factor    init   f c
20512000 "k3(p-225"   sum     7.978e-4   0.0    0
*
*ctlvar           a0       coeff        variable name  parameter no.
20512001       -2250.0    1.45037e-4          p          340010000
$*=*=*=*=*=*=*=*=*=*=*=*=*=*=*=*=*=*=*=*=*=*=*=*=*=*=*=*=*=*=*=*=*=*=*=*=*=*=*=*=**
*ctlvar     name       type     factor    init   f c
20512100 "a del te"   sum       1.8      57.5   0
```

```
*
*ctlvar          a0      coeff       variable name  parameter no.
20512101         0.0       1.0            tempf       204040000
20512102                  -1.0           tempf       216010000
$*=*=*=
```

```
20512800 "atdelt-d"   sum       1.0     -1.0    0
*
*ctlvar          a0       coeff        variable name  parameter no.
20512801         0.0        1.0            cntrlvar         121
20512802                   -1.0            cntrlvar         127
$*=*=*=*=*=*=*=*=*=*=*=*=*=*=*=*=*=*=*=*=*=*=*=*=*=*=*=*=*=*=*=*=*=*=*=*=*=**
*ctlvar     name       type     factor    init   f c     max    max
20512900 "atdelt>d" function   1.0e99    0.0    0 2     1.0
*
*ctlvar     srch arg. name   srch arg. no.         table no.
20512901       cntrlvar           128                 900
$*=*=*=*=*=*=*=*=*=*=*=*=*=*=*=*=*=*=*=*=*=*=*=*=*=*=*=*=*=*=*=*=*=*=*=*=*=**
$*=*=*=*=*=*=*=*=*=*=*=*=*=*=*=*=*=*=*=*=*=*=*=*=*=*=*=*=*=*=*=*=*=*=*=*=*=**
*ctlvar     name       type     factor    init   f c
20513100 "b del te"   sum       1.8      57.5   0
*
*ctlvar          a0       coeff        variable name  parameter no.
20513101         0.0        1.0            tempf        304040000
20513102                   -1.0            tempf        316010000
$*=*=*=*=*=*=*=*=*=*=*=*=*=*=*=*=*=*=*=*=*=*=*=*=*=*=*=*=*=*=*=*=*=*=*=*=*=**
*ctlvar     name       type     factor    init   f c
20513200 "btavg-57"    sum       1.0      0.0    0
*
*ctlvar          a0       coeff        variable name  parameter no.
20513201       -575.4       1.0            cntrlvar         102
$*=*=*=*=*=*=*=*=*=*=*=*=*=*=*=*=*=*=*=*=*=*=*=*=*=*=*=*=*=*=*=*=*=*=*=*=*=**
*ctlvar     name       type     factor    init   f c
20513300 "bk2(l-l)"   lead-lag  0.01035    0.0    0
*
*ctlvar        tau-1          tau-2     variable name  parameter no.
20513301        20.0           3.0         cntrlvar         132
$*=*=*=*=*=*=*=*=*=*=*=*=*=*=*=*=*=*=*=*=*=*=*=*=*=*=*=*=*=*=*=*=*=*=*=*=*=**
*ctlvar     name       type     factor    init   f c
20513400 "brdelt s"   sum      57.5      0.0    0
*
*ctlvar          a0       coeff        variable name  parameter no.
20513401        1.162       1.0            cntrlvar         120
20513402                   -1.0            cntrlvar         133
$*=*=*=*=*=*=*=*=*=*=*=*=*=*=*=*=*=*=*=*=*=*=*=*=*=*=*=*=*=*=*=*=*=*=*=*=*=**
*ctlvar     name       type     factor    init   f c
20513500 "brdt-dt0"     sum       1.0     -1.0    0
*
*ctlvar          a0       coeff        variable name  parameter no.
20513501         0.0        1.0            cntrlvar         131
20513502                   -1.0            cntrlvar         134
$*=*=*=*=*=*=*=*=*=*=*=*=*=*=*=*=*=*=*=*=*=*=*=*=*=*=*=*=*=*=*=*=*=*=*=*=*=**
*ctlvar     name       type     factor    init   f c     max    max
20513600 "brdt>dt0"   function   1.0e99    0.0    0 2     1.0
*
*ctlvar     srch arg. name   srch arg. no.         table no.
```

```
20513601        cntrlvar          135                900
$*=*=*=*=*=*=*=*=*=*=*=*=*=*=*=*=*=*=*=*=*=*=*=*=*=*=*=*=*=*=*=*=*=*=*=*=*=*=**
*ctlvar      name       type     factor    init   f c
20513700 "btdelt s"   sum       57.5     0.0    0
*
*ctlvar           a0       coeff        variable name  parameter no.
20513701         1.132       1.0            cntrlvar         120
20513702                    -1.0            cntrlvar         133
$*=*=*=*=*=*=*=*=*=*=*=*=*=*=*=*=*=*=*=*=*=*=*=*=*=*=*=*=*=*=*=*=*=*=*=*=*=*=**
*ctlvar      name       type     factor    init   f c
20513800 "btdelt-d"   sum       1.0     -1.0    0
*
*ctlvar           a0       coeff        variable name  parameter no.
20513801          0.0        1.0            cntrlvar         131
20513802                    -1.0            cntrlvar         137
$*=*=*=*=*=*=*=*=*=*=*=*=*=*=*=*=*=*=*=*=*=*=*=*=*=*=*=*=*=*=*=*=*=*=*=*=*=*=**
*ctlvar      name       type     factor    init   f c     max    max
20513900 "btdelt>d" function   1.0e99    0.0    0 2     1.0
*
*ctlvar      srch arg. name   srch arg. no.         table no.
20513901        cntrlvar          138                900
$*=*=*=*=*=*=*=*=*=*=*=*=*=*=*=*=*=*=*=*=*=*=*=*=*=*=*=*=*=*=*=*=*=*=*=*=*=*=**
$*=*=*=*=*=*=*=*=*=*=*=*=*=*=*=*=*=*=*=*=*=*=*=*=*=*=*=*=*=*=*=*=*=*=*=*=*=*=**
*ctlvar      name       type     factor    init   f c
20514100 "c del te"   sum       1.8      57.5   0
*
*ctlvar           a0       coeff        variable name  parameter no.
20514101          0.0        1.0             tempf        405010000
20514102                    -1.0             tempf        416010000
$*=*=*=*=*=*=*=*=*=*=*=*=*=*=*=*=*=*=*=*=*=*=*=*=*=*=*=*=*=*=*=*=*=*=*=*=*=*=**
*ctlvar      name       type     factor    init   f c
20514200 "ctavg-57"    sum       1.0      0.0    0
*
*ctlvar           a0       coeff        variable name  parameter no.
20514201        -575.4       1.0            cntrlvar         103
$*=*=*=*=*=*=*=*=*=*=*=*=*=*=*=*=*=*=*=*=*=*=*=*=*=*=*=*=*=*=*=*=*=*=*=*=*=*=**
*ctlvar      name       type     factor    init   f c
20514300 "ck2(l-l)"   lead-lag  0.01035    0.0    0
*
*ctlvar         tau-1          tau-2     variable name  parameter no.
20514301         20.0           3.0         cntrlvar         142
$*=*=*=*=*=*=*=*=*=*=*=*=*=*=*=*=*=*=*=*=*=*=*=*=*=*=*=*=*=*=*=*=*=*=*=*=*=*=**
*ctlvar      name       type     factor    init   f c
20514400 "crdelt s"   sum       57.5     0.0    0
*
*ctlvar           a0       coeff        variable name  parameter no.
20514401         1.162       1.0            cntrlvar         120
20514402                    -1.0            cntrlvar         143
$*=*=*=*=*=*=*=*=*=*=*=*=*=*=*=*=*=*=*=*=*=*=*=*=*=*=*=*=*=*=*=*=*=*=*=*=*=*=**
*ctlvar      name       type     factor    init   f c
```

```
20514500 "crdt-dt0"     sum       1.0     -1.0    0
*
*ctlvar          a0       coeff        variable name  parameter no.
20514501         0.0        1.0            cntrlvar         141
20514502                   -1.0            cntrlvar         144
$*=*=*=
```

```
20515300 "ardt lag"     lag       1.0      0.0    0 1     0.0
*
*ctlvar         tau-1                    variable name  parameter no.
20515301         10.0                      cntrlvar         152
$*=*=*=*=*=*=*=*=*=*=*=*=*=*=*=*=*=*=*=*=*=*=*=*=*=*=*=*=*=*=*=*=*=*=*=*=*=*=*=**
*ctlvar      name       type     factor    init   f c
20515400 "arop set"     sum       57.5     57.5   0
*
*ctlvar            a0       coeff        variable name  parameter no.
20515401         1.072      -1.0            cntrlvar         151
20515402                   -1.0            cntrlvar         153
$*=*=*=*=*=*=*=*=*=*=*=*=*=*=*=*=*=*=*=*=*=*=*=*=*=*=*=*=*=*=*=*=*=*=*=*=*=*=*=**
*ctlvar      name       type     factor    init   f c
20515500 "arop-t0"      sum       1.0     -1.0    0
*
*ctlvar            a0       coeff        variable name  parameter no.
20515501          0.0        1.0            cntrlvar         121
20515502                   -1.0            cntrlvar         154
$*=*=*=*=*=*=*=*=*=*=*=*=*=*=*=*=*=*=*=*=*=*=*=*=*=*=*=*=*=*=*=*=*=*=*=*=*=*=*=**
*ctlvar      name       type     factor    init   f c     max    max
20515600 "arop>t0"    function   1.0e99    0.0    0 2     1.0
*
*ctlvar      srch arg. name   srch arg. no.         table no.
20515601        cntrlvar           155                 900
$*=*=*=*=*=*=*=*=*=*=*=*=*=*=*=*=*=*=*=*=*=*=*=*=*=*=*=*=*=*=*=*=*=*=*=*=*=*=*=**
$the following control variables - 157 through 159 - calculate the
$turbine over-power trip status.  the b and c loops use 167-169 and
$177-179, respectively.  documentation is on page 30.
*-----------------------------------------------------------------
*ctlvar      name       type     factor    init   f c
20515700 "atop set"     sum       57.5     57.5   0
*
*ctlvar            a0       coeff        variable name  parameter no.
20515701         1.042      -1.0            cntrlvar         151
20515702                   -1.0            cntrlvar         153
$*=*=*=*=*=*=*=*=*=*=*=*=*=*=*=*=*=*=*=*=*=*=*=*=*=*=*=*=*=*=*=*=*=*=*=*=*=*=*=**
*ctlvar      name       type     factor    init   f c
20515800 "atop-t0"      sum       1.0     -1.0    0
*
*ctlvar            a0       coeff        variable name  parameter no.
20515801          0.0        1.0            cntrlvar         121
20515802                   -1.0            cntrlvar         157
$*=*=*=*=*=*=*=*=*=*=*=*=*=*=*=*=*=*=*=*=*=*=*=*=*=*=*=*=*=*=*=*=*=*=*=*=*=*=*=**
*ctlvar      name       type     factor    init   f c     max    max
20515900 "atop>t0"    function   1.0e99    0.0    0 2     1.0
*
*ctlvar      srch arg. name   srch arg. no.         table no.
20515901        cntrlvar           158                 900
$*=*=*=*=*=*=*=*=*=*=*=*=*=*=*=*=*=*=*=*=*=*=*=*=*=*=*=*=*=*=*=*=*=*=*=*=*=*=*=**
*ctlvar      name       type     factor    init   f c     min
```

```
20516100 "brop k6"      sum     2.235e-3   0.0    0 1     0.0
*
*ctlvar           a0       coeff        variable name  parameter no.
20516101        -575.4       1.0            cntrlvar         102
$*=*=*=
```

```
$*=*=*=*=*=*=*=*=*=*=*=*=*=*=*=*=*=*=*=*=*=*=*=*=*=*=*=*=*=*=*=*=*=*=*=*=*=*=*=*=**
*ctlvar     name       type     factor    init   f c     max    max
20516900 "btop>t0"    function   1.0e99    0.0    0 2     1.0
*
*ctlvar     srch arg. name   srch arg. no.         table no.
20516901        cntrlvar           168                900
$*=*=*=*=*=*=*=*=*=*=*=*=*=*=*=*=*=*=*=*=*=*=*=*=*=*=*=*=*=*=*=*=*=*=*=*=*=*=*=*=**
*ctlvar     name       type     factor    init   f c     min
20517100 "crop k6"      sum     2.235e-3   0.0    0 1     0.0
*
*ctlvar           a0       coeff        variable name  parameter no.
20517101        -575.4       1.0           cntrlvar         103
$*=*=*=*=*=*=*=*=*=*=*=*=*=*=*=*=*=*=*=*=*=*=*=*=*=*=*=*=*=*=*=*=*=*=*=*=*=*=*=*=**
*ctlvar     name       type     factor    init   f c
20517200 "crdtavg/" diffrend    0.20     0.0    0
*
*ctlvar     d(var)/dt name   d(var)/dt no.
20517201        cntrlvar           103
$*=*=*=*=*=*=*=*=*=*=*=*=*=*=*=*=*=*=*=*=*=*=*=*=*=*=*=*=*=*=*=*=*=*=*=*=*=*=*=*=**
*ctlvar     name       type     factor    init   f c     min
20517300 "crdt lag"     lag       1.0      0.0    0 1     0.0
*
*ctlvar         tau-1                    variable name  parameter no.
20517301         10.0                        cntrlvar         172
$*=*=*=*=*=*=*=*=*=*=*=*=*=*=*=*=*=*=*=*=*=*=*=*=*=*=*=*=*=*=*=*=*=*=*=*=*=*=*=*=**
*ctlvar     name       type     factor    init   f c
20517400 "crop set"     sum       57.5     57.5   0
*
*ctlvar           a0       coeff        variable name  parameter no.
20517401         1.072      -1.0           cntrlvar         171
20517402                   -1.0           cntrlvar         173
$*=*=*=*=*=*=*=*=*=*=*=*=*=*=*=*=*=*=*=*=*=*=*=*=*=*=*=*=*=*=*=*=*=*=*=*=*=*=*=*=**
*ctlvar     name       type     factor    init   f c
20517500 "crop-t0"      sum       1.0     -1.0    0
*
*ctlvar           a0       coeff        variable name  parameter no.
20517501          0.0        1.0           cntrlvar         141
20517502                   -1.0           cntrlvar         174
$*=*=*=*=*=*=*=*=*=*=*=*=*=*=*=*=*=*=*=*=*=*=*=*=*=*=*=*=*=*=*=*=*=*=*=*=*=*=*=*=**
*ctlvar     name       type     factor    init   f c     max    max
20517600 "crop>t0"    function   1.0e99    0.0    0 2     1.0
*
*ctlvar     srch arg. name   srch arg. no.         table no.
20517601        cntrlvar           175                900
$*=*=*=*=*=*=*=*=*=*=*=*=*=*=*=*=*=*=*=*=*=*=*=*=*=*=*=*=*=*=*=*=*=*=*=*=*=*=*=*=**
*ctlvar     name       type     factor    init   f c
20517700 "ctop set"     sum       57.5     57.5   0
*
*ctlvar           a0       coeff        variable name  parameter no.
20517701         1.042      -1.0           cntrlvar         171
```

```
20517702                -1.0          cntrlvar        173
$*=*=*=*=*=*=*=*=*=*=*=*=*=*=*=*=*=*=*=*=*=*=*=*=*=*=*=*=*=*=*=*=*=*=*=*=*=*=*=*=**
*ctlvar     name      type    factor   init   f c
20517800 "ctop-t0"     sum      1.0    -1.0    0
*
*ctlvar          a0      coeff       variable name  parameter no.
20517801         0.0       1.0          cntrlvar        141
20517802                -1.0          cntrlvar        177
$*=*=*=*=*=*=*=*=*=*=*=*=*=*=*=*=*=*=*=*=*=*=*=*=*=*=*=*=*=*=*=*=*=*=*=*=*=*=*=*=**
*ctlvar     name      type    factor   init   f c     max    max
20517900 "ctop>t0"   function  1.0e99    0.0    0 2     1.0
*
*ctlvar     srch arg. name   srch arg. no.        table no.
20517901       cntrlvar          178                900
$*=*=*=*=*=*=*=*=*=*=*=*=*=*=*=*=*=*=*=*=*=*=*=*=*=*=*=*=*=*=*=*=*=*=*=*=*=*=*=*=**
$the following control variables calculate the 2/3 reactor and turbine
$over-temperature and over-power values, respectively.  documentation
$is on pages 31-32a.
*-----------------------------------------------------------------------
*ctlvar     name      type    factor   init   f c
20518000 "rdelt 2/"   sum      1.0      0.0    0
*
*ctlvar          a0      coeff       variable name  parameter no.
20518001         0.0       1.0          cntrlvar        126
20518002                  1.0          cntrlvar        136
20518003                  1.0          cntrlvar        146
$*=*=*=*=*=*=*=*=*=*=*=*=*=*=*=*=*=*=*=*=*=*=*=*=*=*=*=*=*=*=*=*=*=*=*=*=*=*=*=*=**
*ctlvar     name      type    factor   init   f c
20518100 "tdelt 2/"   sum      1.0      0.0    0
*
*ctlvar          a0      coeff       variable name  parameter no.
20518101         0.0       1.0          cntrlvar        129
20518102                  1.0          cntrlvar        139
20518103                  1.0          cntrlvar        149
$*=*=*=*=*=*=*=*=*=*=*=*=*=*=*=*=*=*=*=*=*=*=*=*=*=*=*=*=*=*=*=*=*=*=*=*=*=*=*=*=**
*ctlvar     name      type    factor   init   f c
20518200 "rop 2/3"    sum      1.0      0.0    0
*
*ctlvar          a0      coeff       variable name  parameter no.
20518201         0.0       1.0          cntrlvar        156
20518202                  1.0          cntrlvar        166
20518203                  1.0          cntrlvar        176
$*=*=*=*=*=*=*=*=*=*=*=*=*=*=*=*=*=*=*=*=*=*=*=*=*=*=*=*=*=*=*=*=*=*=*=*=*=*=*=*=**
*ctlvar     name      type    factor   init   f c
20518300 "top 2/3"    sum      1.0      0.0    0
*
*ctlvar          a0      coeff       variable name  parameter no.
20518301         0.0       1.0          cntrlvar        159
20518302                  1.0          cntrlvar        169
20518303                  1.0          cntrlvar        179
```

```
$*=*=*=
```

```
*
*ctlvar      srch arg. name   srch arg. no.         table no.
20519701        cntrlvar           100                197
$*=*=*=
```

```
20520601        54.0      77.0          cntrlvar        204
$*=*=*=*=*=*=*=*=*=*=*=*=*=*=*=*=*=*=*=*=*=*=*=*=*=*=*=*=*=*=*=*=*=*=*=*=*=*=**
*ctlvar     name      type    factor   init   f c    min    max
20520700 "net cvcs"    sum       1.0      0.0    0 3   -54.0   154.0
*
*ctlvar          a0      coeff       variable name  parameter no.
20520701         0.0        1.0          cntrlvar        206
20520703                  -54.0          cntrlvar        205
$*=*=*=*=*=*=*=*=*=*=*=*=*=*=*=*=*=*=*=*=*=*=*=*=*=*=*=*=*=*=*=*=*=*=*=*=*=*=**
$the following control variables - 210 through 226 - represent the
$pressurizer pressure control system.  documentation is on pages 46
$through 56a.
*-----------------------------------------------------------------
*ctlvar     name      type    factor   init   f c
20521000 "pzr pres"    mult   1.45037e-4 2250.0 0
*
*ctlvar  variable name  parameter no.
20521001      p         340010000
$*=*=*=*=*=*=*=*=*=*=*=*=*=*=*=*=*=*=*=*=*=*=*=*=*=*=*=*=*=*=*=*=*=*=*=*=*=*=**
*ctlvar     name      type    factor   init   f c
20521100 "pzr p-pr"   sum       1.0      0.0    0
*
*ctlvar          a0      coeff       variable name  parameter no.
20521101      -2250.0      1.0          cntrlvar        210
$*=*=*=*=*=*=*=*=*=*=*=*=*=*=*=*=*=*=*=*=*=*=*=*=*=*=*=*=*=*=*=*=*=*=*=*=*=*=**
*ctlvar     name      type    factor   init   f c
20521200 "p comp e" prop-int    1.0      0.0    0 3    -25.0  100.0
*
*ctlvar      prop gain      int. gain   variable name  parameter no.
20521201        1.0        8.33333e-2     cntrlvar        211
$*=*=*=*=*=*=*=*=*=*=*=*=*=*=*=*=*=*=*=*=*=*=*=*=*=*=*=*=*=*=*=*=*=*=*=*=*=*=**
*ctlvar     name      type    factor   init   f c    min    max
20521300 "p spray "    sum       1.0      0.0    0 3     0.0    1.0
*
*ctlvar          a0      coeff       variable name  parameter no.
20521301       -0.50      0.020          cntrlvar        212
$*=*=*=*=*=*=*=*=*=*=*=*=*=*=*=*=*=*=*=*=*=*=*=*=*=*=*=*=*=*=*=*=*=*=*=*=*=*=**
*ctlvar     name      type    factor   init   f c
20521400 "p htr tr" tripunit    1.0      0.0    0
*
*ctlvar     trip no.
20521401     -510
$*=*=*=*=*=*=*=*=*=*=*=*=*=*=*=*=*=*=*=*=*=*=*=*=*=*=*=*=*=*=*=*=*=*=*=*=*=*=**
*ctlvar     name      type    factor   init   f c    min    max
20521500 "p phtr d"   sum      0.2e6    0.0     0 3     0.0   0.2e6
*
*ctlvar          a0      coeff       variable name  parameter no.
20521501         0.00    -6.66667e-02      cntrlvar        212
$*=*=*=*=*=*=*=*=*=*=*=*=*=*=*=*=*=*=*=*=*=*=*=*=*=*=*=*=*=*=*=*=*=*=*=*=*=*=**
*ctlvar     name      type    factor   init   f c
```

```
20521600 "p phtr q"     mult      1.0      0.0    0
*
*ctlvar  variable name  parameter no.    variable name  parameter no.
20521601    cntrlvar         214            cntrlvar         215
$*=*=*=*=*=*=*=*=*=*=*=*=*=*=*=*=*=*=*=*=*=*=*=*=*=*=*=*=*=*=*=*=*=*=*=*=*=*=*=**
*ctlvar      name       type     factor    init   f c
20521700 "p on-off"  tripunit   0.9e6     0.0    0
*
*ctlvar      trip no.
20521701       612
$*=*=*=*=*=*=*=*=*=*=*=*=*=*=*=*=*=*=*=*=*=*=*=*=*=*=*=*=*=*=*=*=*=*=*=*=*=*=*=**
*ctlvar      name       type     factor    init   f c
20521800 "p pv1 op" tripunit    0.25     0.0    0
*
*ctlvar      trip no.
20521801       614
$*=*=*=*=*=*=*=*=*=*=*=*=*=*=*=*=*=*=*=*=*=*=*=*=*=*=*=*=*=*=*=*=*=*=*=*=*=*=*=**
*ctlvar      name       type     factor    init   f c
20521900 "p pv1 cl" tripunit   -0.5     -0.5    0
*
*ctlvar      trip no.
20521901      -614
$*=*=*=*=*=*=*=*=*=*=*=*=*=*=*=*=*=*=*=*=*=*=*=*=*=*=*=*=*=*=*=*=*=*=*=*=*=*=*=**
*ctlvar      name       type     factor    init   f c
20522000 "p pv1 di"    sum       1.0     -1.0    0
*
*ctlvar            a0       coeff        variable name  parameter no.
20522001          0.0        1.0            cntrlvar         218
20522002                     1.0            cntrlvar         219
$*=*=*=*=*=*=*=*=*=*=*=*=*=*=*=*=*=*=*=*=*=*=*=*=*=*=*=*=*=*=*=*=*=*=*=*=*=*=*=**
*ctlvar      name       type     factor    init   f c     min    max
20522100 "p pv1 da"     mult      1.0      0.0    0 3    -0.5    0.5
*
*ctlvar  variable name  parameter no.    variable name  parameter no.
20522101    cntrlvar         001            cntrlvar         220
$*=*=*=*=*=*=*=*=*=*=*=*=*=*=*=*=*=*=*=*=*=*=*=*=*=*=*=*=*=*=*=*=*=*=*=*=*=*=*=**
*ctlvar      name       type     factor    init   f c
20522200 "p pv2 op" tripunit    0.25     0.0    0
*
*ctlvar      trip no.
20522201       616
$*=*=*=*=*=*=*=*=*=*=*=*=*=*=*=*=*=*=*=*=*=*=*=*=*=*=*=*=*=*=*=*=*=*=*=*=*=*=*=**
*ctlvar      name       type     factor    init   f c
20522300 "p pv2 cl" tripunit   -0.5     -0.5    0
*
*ctlvar      trip no.
20522301      -616
$*=*=*=*=*=*=*=*=*=*=*=*=*=*=*=*=*=*=*=*=*=*=*=*=*=*=*=*=*=*=*=*=*=*=*=*=*=*=*=**
*ctlvar      name       type     factor    init   f c
20522400 "p pv2 di"    sum       1.0     -1.0    0
```

```
*
*ctlvar          a0      coeff       variable name  parameter no.
20522401         0.0       1.0          cntrlvar        222
20522402                   1.0          cntrlvar        223
$*=*=*=*=*=*=*=*=*=*=*=*=*=*=*=*=*=*=*=*=*=*=*=*=*=*=*=*=*=*=*=*=*=*=*=*=*=*=*=*=**
*ctlvar     name       type     factor    init   f c     min    max
20522500 "p pv2 da"     mult      1.0      0.0    0 3    -0.5    0.5
*
*ctlvar  variable name  parameter no.    variable name  parameter no.
20522501    cntrlvar        001           cntrlvar        224
$*=*=*=*=*=*=*=*=*=*=*=*=*=*=*=*=*=*=*=*=*=*=*=*=*=*=*=*=*=*=*=*=*=*=*=*=*=*=*=*=**
*ctlvar     name       type     factor    init   f c     min    max
20522600 "porv 1 a"     sum       1.0      0.0    0 3     0.0    0.5
*
*ctlvar          a0      coeff       variable name  parameter no.
20522602         0.0       1.0          cntrlvar        221
20522603                   1.0          cntrlvar        226
$*=*=*=*=*=*=*=*=*=*=*=*=*=*=*=*=*=*=*=*=*=*=*=*=*=*=*=*=*=*=*=*=*=*=*=*=*=*=*=*=**
*ctlvar     name       type     factor    init   f c     min    max
20522700 "porv 2 a"     sum       1.0      0.0    0 3     0.0    0.5
*
*ctlvar          a0      coeff       variable name  parameter no.
20522702         0.0       1.0          cntrlvar        225
20522703                   1.0          cntrlvar        227
$*=*=*=*=*=*=*=*=*=*=*=*=*=*=*=*=*=*=*=*=*=*=*=*=*=*=*=*=*=*=*=*=*=*=*=*=*=*=*=*=**
*ctlvar     name       type     factor    init   f c     min    max
20522800 "p porv a"     sum       1.0      0.0    0 3     0.0    1.0
*
*ctlvar          a0      coeff       variable name  parameter no.
20522802         0.0       1.0          cntrlvar        226
20522803                   1.0          cntrlvar        227
*
$*=*=*=*=*=*=*=*=*=*=*=*=*=*=*=*=*=*=*=*=*=*=*=*=*=*=*=*=*=*=*=*=*=*=*=*=*=*=*=*=**
$the following control variable closes the feedwater bypass valves    *
$automatically upon actuation of sias. see also control variables     *
$528, 628, and 728.                                                   *
*-----------------------------------------------------------------------
*ctlvar     name       type     factor    init   f c
20549900 "sias on "   tripunit    1.0      0.0    0
*
*ctlvar     trip no.
20549901       668
*
$*=*=*=*=*=*=*=*=*=*=*=*=*=*=*=*=*=*=*=*=*=*=*=*=*=*=*=*=*=*=*=*=*=*=*=*=*=*=*=*=***
$the following control variables - 500 through 528 - represent the sga
$level control system.  control variables 601 through 628 and 701
$through 728 represent the b and c generators, respectively.
$documentation is on pages 57-77.
*-----------------------------------------------------------------------
*ctlvar     name       type     factor    init   f c
```

```
20550000 "a ref ta"    sum       1.0      0.0    0
*
*ctlvar          a0       coeff        variable name  parameter no.
20550001          0.0     1.45037e-4          p          278010000
20550002                  3.04345e-4          rho        278010000
$*=*=*=
```

```
20550801        5.0                     cntrlvar        506
$*=*=*=*=*=*=*=*=*=*=*=*=*=*=*=*=*=*=*=*=*=*=*=*=*=*=*=*=*=*=*=*=*=*=*=*=*=*=**
*ctlvar     name      type    factor   init   f c    min    max
20551000 "sg nlvl "   sum       1.0      0.52   0 3    .39    0.52
*
*ctlvar           a0      coeff       variable name  parameter no.
20551001       0.37224   1.75230e-7          p         806010000
$*=*=*=*=*=*=*=*=*=*=*=*=*=*=*=*=*=*=*=*=*=*=*=*=*=*=*=*=*=*=*=*=*=*=*=*=*=*=**
*ctlvar     name      type    factor   init   f c
20551100 "a lvl er"   sum     1.0       0.0    0
*
*ctlvar           a0      coeff       variable name  parameter no.
20551101         0.0       1.0          cntrlvar        510
20551102                  -1.0          cntrlvar        508
$*=*=*=*=*=*=*=*=*=*=*=*=*=*=*=*=*=*=*=*=*=*=*=*=*=*=*=*=*=*=*=*=*=*=*=*=*=*=**
*ctlvar     name      type    factor   init   f c
20551200 "a lvl pi"   prop-int   3.3      0.0    0 3    -3.0   2.0
*
*ctlvar      prop gain     int. gain   variable name  parameter no.
20551201        1.0        5.55556e-4    cntrlvar        511
$*=*=*=*=*=*=*=*=*=*=*=*=*=*=*=*=*=*=*=*=*=*=*=*=*=*=*=*=*=*=*=*=*=*=*=*=*=*=**
*ctlvar     name      type    factor   init   f c
20551300 "a ttl er"   sum       1.0      0.0    0
*
*ctlvar           a0      coeff       variable name  parameter no.
20551301         0.0       1.0          cntrlvar        512
20551302                1.98414e-3        mflowj       555000000
20551303               -1.98414e-3        mflowj       525000000
$*=*=*=*=*=*=*=*=*=*=*=*=*=*=*=*=*=*=*=*=*=*=*=*=*=*=*=*=*=*=*=*=*=*=*=*=*=*=**
*ctlvar     name      type    factor   init   f c
20551400 "a fwv dm"  prop-int    1.0      0.0    0 3    -4.0   3.0
*
*ctlvar      prop gain     int. gain   variable name  parameter no.
20551401        1.0          .005        cntrlvar        513
$*=*=*=*=*=*=*=*=*=*=*=*=*=*=*=*=*=*=*=*=*=*=*=*=*=*=*=*=*=*=*=*=*=*=*=*=*=*=**
*ctlvar     name      type    factor   init   f c
20551500 "mfw1 gpm"    mult    2442.370 1500.0   0
*
*ctlvar  variable name  parameter no.
20551501      velfj       863000000
$*=*=*=*=*=*=*=*=*=*=*=*=*=*=*=*=*=*=*=*=*=*=*=*=*=*=*=*=*=*=*=*=*=*=*=*=*=*=**
*ctlvar     name      type    factor   init   f c
20551600 "mfw2 gpm"    mult    2442.370 1500.0   0
*
*ctlvar  variable name  parameter no.
20551601      velfj       866000000
$*=*=*=*=*=*=*=*=*=*=*=*=*=*=*=*=*=*=*=*=*=*=*=*=*=*=*=*=*=*=*=*=*=*=*=*=*=*=**
*ctlvar     name      type    factor   init   f c
20551700 "hw flow"     sum      2.2046    0.0    0
*
```

```
*ctlvar          a0      coeff       variable name  parameter no.
20551701         0.0       1.0           mflowj       804000000
20551703                   1.0           mflowj       808000000
20551704                   1.0           mflowj       868000000
20551705                  -1.0           mflowj       824020000
20551706                  -1.0           mflowj       530000000
20551707                  -1.0           mflowj       630000000
20551708                  -1.0           mflowj       730000000
20551709                  -1.0           mflowj       540000000
20551710                  -1.0           mflowj       640000000
20551711                  -1.0           mflowj       740000000
$*=*=*=*=*=*=*=*=*=*=*=*=*=*=*=*=*=*=*=*=*=*=*=*=*=*=*=*=*=*=*=*=*=*=*=*=*=*=*=*=*=*=**
*ctlvar     name       type     factor    init   f c     min
20551800 "hw mass"    integral    1.0  2535856.13 0 1     0.0
*
*ctlvar     integrand name   integrand no.
20551801        cntrlvar          517
$*=*=*=*=*=*=*=*=*=*=*=*=*=*=*=*=*=*=*=*=*=*=*=*=*=*=*=*=*=*=*=*=*=*=*=*=*=*=*=*=*=*=**
*ctlvar     name       type     factor    init   f c
20551900 "fwv stat" tripunit     1.0     0.0    0
*
*ctlvar     trip no.
20551901      -631
$*=*=*=*=*=*=*=*=*=*=*=*=*=*=*=*=*=*=*=*=*=*=*=*=*=*=*=*=*=*=*=*=*=*=*=*=*=*=*=*=*=*=**
*ctlvar     name       type     factor    init   f c
20552000 "fw vlv t" tripunit     1.0     0.0    0
*
*ctlvar     trip no.
20552001       631
$*=*=*=*=*=*=*=*=*=*=*=*=*=*=*=*=*=*=*=*=*=*=*=*=*=*=*=*=*=*=*=*=*=*=*=*=*=*=*=*=*=*=**
*ctlvar     name       type     factor    init   f c
20552100 "a old fw"     mult      1.0      0.0    0
*
*ctlvar  variable name  parameter no.    variable name  parameter no.
20552101    cntrlvar         520            cntrlvar         524
$*=*=*=*=*=*=*=*=*=*=*=*=*=*=*=*=*=*=*=*=*=*=*=*=*=*=*=*=*=*=*=*=*=*=*=*=*=*=*=*=*=*=**
*ctlvar     name       type     factor    init   f c     min    max
20552200 "a adj da"     sum       1.0      0.0    0 3    -1.0    1.0
*
*ctlvar          a0      coeff       variable name  parameter no.
20552201         0.0       1.0           cntrlvar         514
20552202                 -10.0          cntrlvar         520
$*=*=*=*=*=*=*=*=*=*=*=*=*=*=*=*=*=*=*=*=*=*=*=*=*=*=*=*=*=*=*=*=*=*=*=*=*=*=*=*=*=*=**
*ctlvar     name       type     factor    init   f c
20552300 "a fwv da"     mult      0.10     0.0    0
*
*ctlvar  variable name  parameter no.    variable name  parameter no.
20552301    cntrlvar         001            cntrlvar         522
$*=*=*=*=*=*=*=*=*=*=*=*=*=*=*=*=*=*=*=*=*=*=*=*=*=*=*=*=*=*=*=*=*=*=*=*=*=*=*=*=*=*=**
*ctlvar     name       type     factor    init   f c     min    max
```

```
20552400 "a fwv ar"   sum       1.0      0.706511 0 3     0.0    1.0
*
*ctlvar           a0       coeff        variable name  parameter no.
20552401          0.0      0.706510        cntrlvar         519
20552402                   1.00           cntrlvar         521
20552403                   1.00           cntrlvar         523
$*=*=*=*=*=*=*=*=*=*=*=*=*=*=*=*=*=*=*=*=*=*=*=*=*=*=*=*=*=*=*=*=*=*=*=*=*=*=*=**
*ctlvar      name       type     factor    init   f c
20552500 "hotstand" tripunit    1.0      0.0    0
*
*ctlvar      trip no.
20552501       533
$*=*=*=*=*=*=*=*=*=*=*=*=*=*=*=*=*=*=*=*=*=*=*=*=*=*=*=*=*=*=*=*=*=*=*=*=*=*=*=**
*ctlvar      name       type     factor    init   f c
20552600 "a fwb fl" tripunit    0.01     0.0    0 0
*
*ctlvar      trip no.
20552601       587
$*=*=*=*=*=*=*=*=*=*=*=*=*=*=*=*=*=*=*=*=*=*=*=*=*=*=*=*=*=*=*=*=*=*=*=*=*=*=*=***
*ctlvar      name       type     factor    init   f c
20552700 "a fwb da"     mult      1.0      0.0    0 0
*
*ctlvar  variable name  parameter no.    variable name  parameter no.
20552701    cntrlvar         523            cntrlvar         525
20552702    cntrlvar         526
$*=*=*=*=*=*=*=*=*=*=*=*=*=*=*=*=*=*=*=*=*=*=*=*=*=*=*=*=*=*=*=*=*=*=*=*=*=*=*=***
*ctlvar      name       type     factor    init   f c     min    max
20552800 "a fwb ar"   sum       1.0      0.0    0 3     0.0    1.0
*
*ctlvar           a0       coeff        variable name  parameter no.
20552801          0.0       1.0            cntrlvar         527
20552802                  -100.0           cntrlvar         499
$*=*=*=*=*=*=*=*=*=*=*=*=*=*=*=*=*=*=*=*=*=*=*=*=*=*=*=*=*=*=*=*=*=*=*=*=*=*=*=***
*ctlvar      name       type     factor    init   f c     min    max
20552900 "a ttl fw"   sum       1.0      0.52   0 3     0.0    1.0
*
*ctlvar           a0       coeff        variable name  parameter no.
20552901          0.0       1.0            cntrlvar         524
20552902                    1.0            cntrlvar         528
$*=*=*=*=*=*=*=*=*=*=*=*=*=*=*=*=*=*=*=*=*=*=*=*=*=*=*=*=*=*=*=*=*=*=*=*=*=*=*=***
$*=*=*=*=*=*=*=*=*=*=*=*=*=*=*=*=*=*=*=*=*=*=*=*=*=*=*=*=*=*=*=*=*=*=*=*=*=*=*=***
$main feedwater pump bypass control logic                          *
$-----------------------------------------------------------------*
*ctlvar      name       type     factor    init   f c
20554000 "a rc ope"   tripunit 1.0       0.0    0 0
*
*ctlvar         trip number
20554001         722
*
*ctlvar      name       type     factor    init   f c
```

```
20554100 "b rc ope"   tripunit 1.0       0.0    0 0
*
*ctlvar         trip number
20554101         726
$*=*=*=
```

```
*----------------------------------------------------------------------
*ctlvar     name       type     factor    init   f c
20555200 "aup sf c" tripunit    1.0      0.0    0
*
*ctlvar     trip no.
20555201       642
$*=*=*=*=*=*=*=*=*=*=*=*=*=*=*=*=*=*=*=*=*=*=*=*=*=*=*=*=*=*=*=*=*=*=*=*=**
$calculate the difference between the upper curve and the lower curve
*----------------------------------------------------------------------
*ctlvar     name       type     factor    init   f c
20555300 "area dif"  function    1.0      0.0    1
*
*ctlvar     srch arg. name   srch arg. no.         table no.
20555301        cntrlvar           551                500
$*=*=*=*=*=*=*=*=*=*=*=*=*=*=*=*=*=*=*=*=*=*=*=*=*=*=*=*=*=*=*=*=*=*=*=*=**
$multiply the difference by the tripunit to determine use of upper or
$lower curve
*----------------------------------------------------------------------
*ctlvar     name       type     factor    init   f c
20555400 "up or dw"    mult      1.0      0.0    1
*
*ctlvar  variable name  parameter no.    variable name  parameter no.
20555401    cntrlvar         552            cntrlvar         553
$*=*=*=*=*=*=*=*=*=*=*=*=*=*=*=*=*=*=*=*=*=*=*=*=*=*=*=*=*=*=*=*=*=*=*=*=**
$calculate the valve area used on the lower curve with corrseponding p
*----------------------------------------------------------------------
*ctlvar     name       type     factor    init   f c
20555500 "low area"   function    1.0      0.0    1
*
*ctlvar     srch arg. name   srch arg. no.         table no.
20555501        cntrlvar           551                501
$*=*=*=*=*=*=*=*=*=*=*=*=*=*=*=*=*=*=*=*=*=*=*=*=*=*=*=*=*=*=*=*=*=*=*=*=**
$calculate the normalized valve area for safety valve a
*----------------------------------------------------------------------
*ctlvar     name       type     factor    init   f c     min     max
20555600 "a norm a"     sum       1.0      0.0    1 3     0.0    1.0
*
*ctlvar            a0       coeff        variable name  parameter no.
20555601          0.0        1.0            cntrlvar         554
20555602                     1.0            cntrlvar         555
$*=*=*=*=*=*=*=*=*=*=*=*=*=*=*=*=*=*=*=*=*=*=*=*=*=*=*=*=*=*=*=*=*=*=*=*=**
$loop a primary to secondary heat transfer                          $
*----------------------------------------------------------------------*
*ctlvar     name       type     factor    init   f c
20557000 "aq pri/s"   sum       1.0      0.0    0 0
*
*ctlvar            a0       coeff        variable name  parameter no.
20557001          0.0       1.0e-6            q          266010000
20557002                    1.0e-6            q          266020000
20557003                    1.0e-6            q          266030000
```

```
20557004                  1.0e-6            q          266040000
$*=*=*=*=*=*=*=*=*=*=*=*=*=*=*=*=*=*=*=*=*=*=*=*=*=*=*=*=*=*=*=*=*=*=*=*=*=*=*=*=***
$*=*=*=*=*=*=*=*=*=*=*=*=*=*=*=*=*=*=*=*=*=*=*=*=*=*=*=*=*=*=*=*=*=*=*=*=*=*=*=*=**
*ctlvar     name       type     factor    init   f c
20560000 "b ref ta"    sum       1.0      0.0    0
*
*ctlvar           a0       coeff        variable name  parameter no.
20560001          0.0     1.45037e-4           p          378010000
20560002                  3.04345e-4          rho         378010000
$*=*=*=*=*=*=*=*=*=*=*=*=*=*=*=*=*=*=*=*=*=*=*=*=*=*=*=*=*=*=*=*=*=*=*=*=*=*=*=*=**
*ctlvar     name       type     factor    init   f c
20560100 "b wr tap"     sum       1.0      0.0    0
*
*ctlvar           a0       coeff        variable name  parameter no.
20560101          0.0     1.45037e-4           p          362040000
20560102                  8.70548e-4          rho         362040000
$*=*=*=*=*=*=*=*=*=*=*=*=*=*=*=*=*=*=*=*=*=*=*=*=*=*=*=*=*=*=*=*=*=*=*=*=*=*=*=*=**
*ctlvar     name       type     factor    init   f c     min    max
20560200 "b wr nlv"    sum       1.0     0.866   0 3     0.0    1.0
*
*ctlvar           a0       coeff        variable name  parameter no.
20560201       -3.80776e-2  7.29735e-2      cntrlvar         601
20560202                  -7.29735e-2      cntrlvar         600
$*=*=*=*=*=*=*=*=*=*=*=*=*=*=*=*=*=*=*=*=*=*=*=*=*=*=*=*=*=*=*=*=*=*=*=*=*=*=*=*=**
*ctlvar     name       type     factor    init   f c
20560300 "b wr lev"   mult     513.0     0.0    0
*
*ctlvar  variable name  parameter no.
20560301    cntrlvar         602
$*=*=*=*=*=*=*=*=*=*=*=*=*=*=*=*=*=*=*=*=*=*=*=*=*=*=*=*=*=*=*=*=*=*=*=*=*=*=*=*=**
*ctlvar     name       type     factor    init   f c
20560500 "b p nr t"     sum       1.0      0.0    0
*
*ctlvar           a0       coeff        variable name  parameter no.
20560501          0.0     1.45037e-4           p          358010000
20560502                 -4.89178e-5          rho         358010000
$*=*=*=*=*=*=*=*=*=*=*=*=*=*=*=*=*=*=*=*=*=*=*=*=*=*=*=*=*=*=*=*=*=*=*=*=*=*=*=*=**
*ctlvar     name       type     factor    init   f c     min    max
20560600 "b nr n l"   sum       1.0       .52    0 3     0.0    1.0
*
*ctlvar           a0       coeff        variable name  parameter no.
20560601     -3.80776e-2   0.26179          cntrlvar         605
20560602                  -0.26179          cntrlvar         600
$*=*=*=*=*=*=*=*=*=*=*=*=*=*=*=*=*=*=*=*=*=*=*=*=*=*=*=*=*=*=*=*=*=*=*=*=*=*=*=*=**
*ctlvar     name       type     factor    init   f c
20560700 "b nr lev"   mult     143.0    74.36   0
*
*ctlvar  variable name  parameter no.
20560701    cntrlvar         606
$*=*=*=*=*=*=*=*=*=*=*=*=*=*=*=*=*=*=*=*=*=*=*=*=*=*=*=*=*=*=*=*=*=*=*=*=*=*=*=*=**
```

```
*ctlvar      name       type     factor    init   f c
20560800 "b nr lus"   lag       1.0      0.52   0
*
*ctlvar         tau-1                    variable name  parameter no.
20560801         5.0                        cntrlvar         606
$*=*=*=
```

```
20562301    cntrlvar        001            cntrlvar        622
$*=*=*=*=*=*=*=*=*=*=*=*=*=*=*=*=*=*=*=*=*=*=*=*=*=*=*=*=*=*=*=*=*=*=*=*=*=*=**
*ctlvar      name       type     factor    init   f c     min    max
20562400 "b fwv ar"   sum       1.0      0.700862 0 3     0.0    1.0
*
*ctlvar            a0       coeff        variable name  parameter no.
20562401          0.0     0.700866          cntrlvar         519
20562402                    1.0             cntrlvar         621
20562403                    1.0             cntrlvar         623
$*=*=*=*=*=*=*=*=*=*=*=*=*=*=*=*=*=*=*=*=*=*=*=*=*=*=*=*=*=*=*=*=*=*=*=*=*=*=**
*ctlvar      name       type     factor    init   f c
20562600 "b fwb fl" tripunit    0.01     0.0    0 0
*
*ctlvar      trip no.
20562601       588
$*=*=*=*=*=*=*=*=*=*=*=*=*=*=*=*=*=*=*=*=*=*=*=*=*=*=*=*=*=*=*=*=*=*=*=*=*=*=***
*ctlvar      name       type     factor    init   f c
20562700 "b fwb da"     mult      1.0      0.0    0 0
*
*ctlvar  variable name  parameter no.    variable name  parameter no.
20562701    cntrlvar        623            cntrlvar        525
20562702    cntrlvar        626
$*=*=*=*=*=*=*=*=*=*=*=*=*=*=*=*=*=*=*=*=*=*=*=*=*=*=*=*=*=*=*=*=*=*=*=*=*=*=***
*ctlvar      name       type     factor    init   f c     min    max
20562800 "b fwb ar"   sum       1.0      0.0    0 3     0.0    1.0
*
*ctlvar            a0       coeff        variable name  parameter no.
20562801          0.0       1.0            cntrlvar        627
20562802                  -100.0           cntrlvar        499
$*=*=*=*=*=*=*=*=*=*=*=*=*=*=*=*=*=*=*=*=*=*=*=*=*=*=*=*=*=*=*=*=*=*=*=*=*=*=***
*ctlvar      name       type     factor    init   f c     min    max
20562900 "b ttl fw"   sum       1.0      0.52   0 3     0.0    1.0
*
*ctlvar            a0       coeff        variable name  parameter no.
20562901          0.0       1.0            cntrlvar        624
20562902                    1.0            cntrlvar        628
$*=*=*=*=*=*=*=*=*=*=*=*=*=*=*=*=*=*=*=*=*=*=*=*=*=*=*=*=*=*=*=*=*=*=*=*=*=*=***
$*=*=*=*=*=*=*=*=*=*=*=*=*=*=*=*=*=*=*=*=*=*=*=*=*=*=*=*=*=*=*=*=*=*=*=*=*=*=**
$steam generator b safety valve control system
*-----------------------------------------------------------------------
$convert pressure in volume 660 to psig
*-----------------------------------------------------------------------
*ctlvar      name       type     factor    init   f c
20565100 "p cnvrt "    sum       1.0      0.0    1
*
*ctlvar            a0       coeff        variable name  parameter no.
20565101        -14.7     1.45038e-04          p          650010000
$*=*=*=*=*=*=*=*=*=*=*=*=*=*=*=*=*=*=*=*=*=*=*=*=*=*=*=*=*=*=*=*=*=*=*=*=*=*=**
$check if on upper hysteresis curve or lower curve
*-----------------------------------------------------------------------
```

```
*ctlvar     name       type     factor    init   f c
20565200 "bup sf c" tripunit    1.0      0.0    0
*
*ctlvar     trip no.
20565201       643
$*=*=*=*=*=*=*=*=*=*=*=*=*=*=*=*=*=*=*=*=*=*=*=*=*=*=*=*=*=*=*=*=*=*=*=*=*=*=*=*=**
$calculate the difference between the upper curve and the lower curve
*-----------------------------------------------------------------------
*ctlvar     name       type     factor    init   f c
20565300 "area dif"  function    1.0      0.0    1
*
*ctlvar     srch arg. name   srch arg. no.         table no.
20565301        cntrlvar           651                500
$*=*=*=*=*=*=*=*=*=*=*=*=*=*=*=*=*=*=*=*=*=*=*=*=*=*=*=*=*=*=*=*=*=*=*=*=*=*=*=*=**
$multiply the difference by the tripunit to determine use of upper or
$lower curve
*-----------------------------------------------------------------------
*ctlvar     name       type     factor    init   f c
20565400 "up or dw"    mult      1.0      0.0    1
*
*ctlvar  variable name  parameter no.    variable name  parameter no.
20565401    cntrlvar         652            cntrlvar         653
$*=*=*=*=*=*=*=*=*=*=*=*=*=*=*=*=*=*=*=*=*=*=*=*=*=*=*=*=*=*=*=*=*=*=*=*=*=*=*=*=**
$calculate the valve area used on the lower curve with corrseponding p
*-----------------------------------------------------------------------
*ctlvar     name       type     factor    init   f c
20565500 "low area" function    1.0      0.0    1
*
*ctlvar     srch arg. name   srch arg. no.         table no.
20565501        cntrlvar           651                501
$*=*=*=*=*=*=*=*=*=*=*=*=*=*=*=*=*=*=*=*=*=*=*=*=*=*=*=*=*=*=*=*=*=*=*=*=*=*=*=*=**
$calculate the normalized valve area for safety valve b
*-----------------------------------------------------------------------
*ctlvar     name       type     factor    init   f c     min     max
20565600 "b norm a"     sum       1.0      0.0    1 3     0.0     1.0
*
*ctlvar            a0       coeff        variable name  parameter no.
20565601          0.0        1.0            cntrlvar         654
20565602                     1.0            cntrlvar         655
$*=*=*=*=*=*=*=*=*=*=*=*=*=*=*=*=*=*=*=*=*=*=*=*=*=*=*=*=*=*=*=*=*=*=*=*=*=*=*=*=**
$loop b primary to secondary heat transfer                                  $
*-----------------------------------------------------------------------*
*ctlvar     name       type     factor    init   f c
20567000 "bq pri/s"   sum       1.0      0.0    0 0
*
*ctlvar            a0       coeff        variable name  parameter no.
20567001          0.0       1.0e-6            q          366010000
20567002                    1.0e-6            q          366020000
20567003                    1.0e-6            q          366030000
20567004                    1.0e-6            q          366040000
```

```
$*=*=*=
```

```
20570800 "c nr lus"   lag       1.0      0.52   0
*
*ctlvar        tau-1                    variable name  parameter no.
20570801        5.0                        cntrlvar        706
$*=*=*=
```

```
$*=*=*=
```

```
20573100 "a lvl 15"  tripunit    1.0      0.0    0
*
*ctlvar      trip no.
20573101       536
$*=*=*=
```

```
$*=*=*=*=*=*=*=*=*=*=*=*=*=*=*=*=*=*=*=*=*=*=*=*=*=*=*=*=*=*=*=*=*=*=*=*=*=*=*=*=*=*=*=*=**
$multiply the difference by the tripunit to determine use of upper or
$lower curve
*-----------------------------------------------------------------------
*ctlvar     name       type     factor    init   f c
20575400 "up or dw"    mult      1.0      0.0    1
*
*ctlvar  variable name  parameter no.    variable name  parameter no.
20575401    cntrlvar         752            cntrlvar         753
$*=*=*=*=*=*=*=*=*=*=*=*=*=*=*=*=*=*=*=*=*=*=*=*=*=*=*=*=*=*=*=*=*=*=*=*=*=*=*=*=*=*=*=*=*=**
$calculate the valve area used on the lower curve with corrseponding p
*-----------------------------------------------------------------------
*ctlvar     name       type     factor    init   f c
20575500 "low area" function    1.0      0.0    1
*
*ctlvar     srch arg. name   srch arg. no.         table no.
20575501        cntrlvar           751                501
$*=*=*=*=*=*=*=*=*=*=*=*=*=*=*=*=*=*=*=*=*=*=*=*=*=*=*=*=*=*=*=*=*=*=*=*=*=*=*=*=*=*=*=*=*=**
$calculate the normalized valve area for safety valve c
*-----------------------------------------------------------------------
*ctlvar     name       type     factor    init   f c     min     max
20575600 "c norm a"     sum       1.0      0.0    1 3     0.0     1.0
*
*ctlvar            a0       coeff        variable name  parameter no.
20575601          0.0        1.0            cntrlvar         754
20575602                     1.0            cntrlvar         755
$*=*=*=*=*=*=*=*=*=*=*=*=*=*=*=*=*=*=*=*=*=*=*=*=*=*=*=*=*=*=*=*=*=*=*=*=*=*=*=*=*=*=*=*=*=**
$loop c primary to secondary heat transfer                                  $
*-----------------------------------------------------------------------*
*ctlvar     name       type     factor    init   f c
20577000 "cq pri/s"   sum       1.0      0.0    0 0
*
*ctlvar            a0       coeff        variable name  parameter no.
20577001          0.0       1.0e-6            q          466010000
20577002                    1.0e-6            q          466020000
20577003                    1.0e-6            q          466030000
20577004                    1.0e-6            q          466040000
$*=*=*=*=*=*=*=*=*=*=*=*=*=*=*=*=*=*=*=*=*=*=*=*=*=*=*=*=*=*=*=*=*=*=*=*=*=*=*=*=*=*=*=*=*=***
$total primary to secondary heat transfer                                   $
*-----------------------------------------------------------------------*
*ctlvar     name       type     factor    init   f c
20577100   "q total"    sum       1.0      0.0    0 0
*
*ctlvar            a0       coeff        variable name  parameter no.
20577101          0.0       1.0            cntrlvar       570
20577102                    1.0            cntrlvar       670
20577103                    1.0            cntrlvar       770
$*=*=*=*=*=*=*=*=*=*=*=*=*=*=*=*=*=*=*=*=*=*=*=*=*=*=*=*=*=*=*=*=*=*=*=*=*=*=*=*=*=*=*=*=*=***
$*=*=*=*=*=*=*=*=*=*=*=*=*=*=*=*=*=*=*=*=*=*=*=*=*=*=*=*=*=*=*=*=*=*=*=*=*=*=*=*=*=*=*=*=*=**
$the following control variables represent the steam dump control
```

```
$system.  the load rejections controller is modelled with control
$variables 800 through 815 (pages 83-94).  the plant trip controller
$is represented with control variables 820 through 823 (pages 95-98);
$the steam pressure controller is modeled with control variables 825
$through 831 (pages 99-101); and the steam line pressure controller is
$modeled with control variables 832 through 841 (pages 102-104).  the
$steam dump system controllers are the used to determine dump and porv
$area demands with control variables 845 through 856 (pages 105-109).
*-----------------------------------------------------------------------
*ctlvar     name       type     factor    init   f c
20580000 "trbn pre"   mult   1.45037e-4 553.0   0
*
*ctlvar  variable name  parameter no.
20580001       p          806010000
$*=*=*=*=*=*=*=*=*=*=*=*=*=*=*=*=*=*=*=*=*=*=*=*=*=*=*=*=*=*=*=*=*=*=*=*=**
*ctlvar     name       type     factor    init   f c
20580100 "ptrbn/dt"   diffrend  -120.0     0.0    0
*
*ctlvar     d(var)/dt name   d(var)/dt no.
20580101        cntrlvar           800
$*=*=*=*=*=*=*=*=*=*=*=*=*=*=*=*=*=*=*=*=*=*=*=*=*=*=*=*=*=*=*=*=*=*=*=*=**
*ctlvar     name       type     factor    init   f c
20580200 "fil p/dt"     lag       1.0      0.0    0
*
*ctlvar        tau-1                    variable name  parameter no.
20580201        120.0                       cntrlvar         801
$*=*=*=*=*=*=*=*=*=*=*=*=*=*=*=*=*=*=*=*=*=*=*=*=*=*=*=*=*=*=*=*=*=*=*=*=**
*ctlvar     name       type     factor    init   f c
20580300   "15% lr"   tripunit    1.0      0.0    0
*
*ctlvar     trip no.
20580301       651
$*=*=*=*=*=*=*=*=*=*=*=*=*=*=*=*=*=*=*=*=*=*=*=*=*=*=*=*=*=*=*=*=*=*=*=*=**
*ctlvar     name       type     factor    init   f c
20580400   "35% lr"   tripunit    1.0      0.0    0
*
*ctlvar     trip no.
20580401       653
$*=*=*=*=*=*=*=*=*=*=*=*=*=*=*=*=*=*=*=*=*=*=*=*=*=*=*=*=*=*=*=*=*=*=*=*=**
*ctlvar     name       type     factor    init   f c
20580500   "55% lr"   tripunit    1.0      0.0    0
*
*ctlvar     trip no.
20580501       655
$*=*=*=*=*=*=*=*=*=*=*=*=*=*=*=*=*=*=*=*=*=*=*=*=*=*=*=*=*=*=*=*=*=*=*=*=**
*ctlvar     name       type     factor    init   f c
20580600 "lrc stat" tripunit    1.0      1.0    0
*
*ctlvar     trip no.
20580601       658
```

```
$*=*=*=*=*=*=*=*=*=*=*=*=*=*=*=*=*=*=*=*=*=*=*=*=*=*=*=*=*=*=*=*=*=*=*=*=*=*=*=*=**
*ctlvar     name      type    factor   init   f c
20580700 "comp tav"  lead-lag   1.0    575.4   0
*
*ctlvar       tau-1        tau-2    variable name  parameter no.
20580701       25.0         5.0       cntrlvar        104
$*=*=*=*=*=*=*=*=*=*=*=*=*=*=*=*=*=*=*=*=*=*=*=*=*=*=*=*=*=*=*=*=*=*=*=*=*=*=*=*=**
*ctlvar     name      type    factor   init   f c
20580800 "lrc t er"   sum      1.0     0.0    0
*
*ctlvar          a0      coeff       variable name  parameter no.
20580801        0.0       1.0          cntrlvar        807
20580802                 -1.0          cntrlvar        115
$*=*=*=*=*=*=*=*=*=*=*=*=*=*=*=*=*=*=*=*=*=*=*=*=*=*=*=*=*=*=*=*=*=*=*=*=*=*=*=*=**
*ctlvar     name      type    factor   init   f c     min    max
20580900 "lr b1 dm"   sum      1.0     0.0    0 3     0.0    0.6
*
*ctlvar          a0      coeff       variable name  parameter no.
20580901     -0.451128   9.02256e-2       cntrlvar        808
$*=*=*=*=*=*=*=*=*=*=*=*=*=*=*=*=*=*=*=*=*=*=*=*=*=*=*=*=*=*=*=*=*=*=*=*=*=*=*=*=**
*ctlvar     name      type    factor   init   f c
20581000 "lr b1 ar"   mult     1.0     0.0    0
*
*ctlvar  variable name  parameter no.    variable name  parameter no.
20581001    cntrlvar        803           cntrlvar        806
20581002    cntrlvar        809
$*=*=*=*=*=*=*=*=*=*=*=*=*=*=*=*=*=*=*=*=*=*=*=*=*=*=*=*=*=*=*=*=*=*=*=*=*=*=*=*=**
*ctlvar     name      type    factor   init   f c     min    max
20581100 "lr b2 dm"   sum      1.0     0.0    0 3     0.0    0.4
*
*ctlvar          a0      coeff       variable name  parameter no.
20581101     -1.04719   8.98876e-2       cntrlvar        808
$*=*=*=*=*=*=*=*=*=*=*=*=*=*=*=*=*=*=*=*=*=*=*=*=*=*=*=*=*=*=*=*=*=*=*=*=*=*=*=*=**
*ctlvar     name      type    factor   init   f c
20581200 "lr b2 ar"   mult     1.0     0.0    0
*
*ctlvar  variable name  parameter no.    variable name  parameter no.
20581201    cntrlvar        804           cntrlvar        806
20581202    cntrlvar        811
$*=*=*=*=*=*=*=*=*=*=*=*=*=*=*=*=*=*=*=*=*=*=*=*=*=*=*=*=*=*=*=*=*=*=*=*=*=*=*=*=**
*ctlvar     name      type    factor   init   f c     min    max
20581300 "lr bp ar"   sum      1.0     0.0    0 3     0.0    1.0
*
*ctlvar          a0      coeff       variable name  parameter no.
20581301        0.0       1.0          cntrlvar        810
20581302                 1.0          cntrlvar        812
$*=*=*=*=*=*=*=*=*=*=*=*=*=*=*=*=*=*=*=*=*=*=*=*=*=*=*=*=*=*=*=*=*=*=*=*=*=*=*=*=**
*ctlvar     name      type    factor   init   f c     min    max
20581400 "lr rv dm"   sum      1.0     0.0    0 3     0.0    1.0
*
```

```
*ctlvar          a0      coeff       variable name  parameter no.
20581401      -2.1250    9.76563e-02     cntrlvar        808
$*=*=*=*=*=*=*=*=*=*=*=*=*=*=*=*=*=*=*=*=*=*=*=*=*=*=*=*=*=*=*=*=*=*=*=*=*=*=**
*ctlvar     name      type    factor   init   f c
20581500 "lr rv ar"   mult     1.0     0.0    0
*
*ctlvar  variable name  parameter no.    variable name  parameter no.
20581501    cntrlvar        805           cntrlvar        806
20581502    cntrlvar        814
$*=*=*=*=*=*=*=*=*=*=*=*=*=*=*=*=*=*=*=*=*=*=*=*=*=*=*=*=*=*=*=*=*=*=*=*=*=*=**
*ctlvar     name      type    factor   init   f c
20582000 "ptc stat" tripunit   1.0     0.0    0
*
*ctlvar     trip no.
20582001      659
$*=*=*=*=*=*=*=*=*=*=*=*=*=*=*=*=*=*=*=*=*=*=*=*=*=*=*=*=*=*=*=*=*=*=*=*=*=*=**
*ctlvar     name      type    factor   init   f c
20582100 "ptc t er"   sum      1.0     28.4   0
*
*ctlvar          a0      coeff       variable name  parameter no.
20582101       -547.0      1.0           cntrlvar        807
$*=*=*=*=*=*=*=*=*=*=*=*=*=*=*=*=*=*=*=*=*=*=*=*=*=*=*=*=*=*=*=*=*=*=*=*=*=*=**
*ctlvar     name      type    factor   init   f c     min    max
20582200 "ptc dmd"     mult   3.33333e-2 0.0    0 3     0.0    1.0
*
*ctlvar  variable name  parameter no.
20582201    cntrlvar        821
$*=*=*=*=*=*=*=*=*=*=*=*=*=*=*=*=*=*=*=*=*=*=*=*=*=*=*=*=*=*=*=*=*=*=*=*=*=*=**
*ctlvar     name      type    factor   init   f c
20582300 "ptc area"    mult     1.0     0.0    0
*
*ctlvar  variable name  parameter no.    variable name  parameter no.
20582301    cntrlvar        820           cntrlvar        822
$*=*=*=*=*=*=*=*=*=*=*=*=*=*=*=*=*=*=*=*=*=*=*=*=*=*=*=*=*=*=*=*=*=*=*=*=*=*=**
*ctlvar     name      type    factor   init   f c
20582400 "pcs p us"   lag    1.45037e-4  741.95 0
*
*ctlvar        tau-1                variable name  parameter no.
20582401        1.0                     p          800010000
$*=*=*=*=*=*=*=*=*=*=*=*=*=*=*=*=*=*=*=*=*=*=*=*=*=*=*=*=*=*=*=*=*=*=*=*=*=*=**
*ctlvar     name      type    factor   init   f c
20582500 "spc stat" tripunit   1.0     0.0    0
*
*ctlvar     trip no.
20582501      657
$*=*=*=*=*=*=*=*=*=*=*=*=*=*=*=*=*=*=*=*=*=*=*=*=*=*=*=*=*=*=*=*=*=*=*=*=*=*=**
*ctlvar     name      type    factor   init   f c
20582600 "p-hdr er"    sum      1.0     0.0    0
*
*ctlvar          a0      coeff       variable name  parameter no.
```

```
20582601      -1020.0      1.0         cntrlvar       824
$*=*=*=*=*=*=*=*=*=*=*=*=*=*=*=*=*=*=*=*=*=*=*=*=*=*=*=*=*=*=*=*=*=*=*=*=*=*=*=*=*=*=**
*ctlvar     name       type     factor    init   f c     min    max
20582700 "sp bp dm"  prop-int   0.005     0.0    0 3     0.0    1.0
*
*ctlvar      prop gain      int. gain   variable name  parameter no.
20582701         1.0         5.55556e-3     cntrlvar         826
$*=*=*=*=*=*=*=*=*=*=*=*=*=*=*=*=*=*=*=*=*=*=*=*=*=*=*=*=*=*=*=*=*=*=*=*=*=*=*=*=*=*=**
*ctlvar     name       type     factor    init   f c
20582800 "tavg<543"   tripunit    1.0      1.0    0
*
*ctlvar     trip no.
20582801       504
$*=*=*=*=*=*=*=*=*=*=*=*=*=*=*=*=*=*=*=*=*=*=*=*=*=*=*=*=*=*=*=*=*=*=*=*=*=*=*=*=*=*=**
*ctlvar     name       type     factor    init   f c
20582900 "sp max a"     sum       1.0      1.0    0
*
*ctlvar            a0       coeff        variable name  parameter no.
20582901          1.0       -0.4            cntrlvar         828
$*=*=*=*=*=*=*=*=*=*=*=*=*=*=*=*=*=*=*=*=*=*=*=*=*=*=*=*=*=*=*=*=*=*=*=*=*=*=*=*=*=*=**
*ctlvar     name       type     factor    init   f c
20583000 "sp bp li"  stdfnctn    1.0      1.0    0
*
*ctlvar     function
20583001       min
*ctlvar  variable name  parameter no.    variable name  parameter no.
20583002    cntrlvar         827            cntrlvar         829
$*=*=*=*=*=*=*=*=*=*=*=*=*=*=*=*=*=*=*=*=*=*=*=*=*=*=*=*=*=*=*=*=*=*=*=*=*=*=*=*=*=*=**
*ctlvar     name       type     factor    init   f c
20583100 "sp bp ar"   mult      1.0      0.0    0
*
*ctlvar  variable name  parameter no.    variable name  parameter no.
20583101    cntrlvar         825            cntrlvar         830
$*=*=*=*=*=*=*=*=*=*=*=*=*=*=*=*=*=*=*=*=*=*=*=*=*=*=*=*=*=*=*=*=*=*=*=*=*=*=*=*=*=*=**
*ctlvar     name       type     factor    init   f c
20583200 "slpc sta" tripunit    1.0      1.0    0
*
*ctlvar     trip no.
20583201      -655
$*=*=*=*=*=*=*=*=*=*=*=*=*=*=*=*=*=*=*=*=*=*=*=*=*=*=*=*=*=*=*=*=*=*=*=*=*=*=*=*=*=*=**
*ctlvar     name       type     factor    init   f c
20583300 "a p-ln e"   sum       1.0      0.0    0
*
*ctlvar            a0       coeff        variable name  parameter no.
20583301      -1050.0    1.45037e-4          p          550010000
$*=*=*=*=*=*=*=*=*=*=*=*=*=*=*=*=*=*=*=*=*=*=*=*=*=*=*=*=*=*=*=*=*=*=*=*=*=*=*=*=*=*=**
*ctlvar     name       type     factor    init   f c     min    max
20583400 "sla rv d" prop-int    0.02     0.0    0 3     0.0    1.0
*
*ctlvar      prop gain      int. gain   variable name  parameter no.
```

```
20583401        1.0        5.55556e-3    cntrlvar        833
$*=*=*=*=*=*=*=*=*=*=*=*=*=*=*=*=*=*=*=*=*=*=*=*=*=*=*=*=*=*=*=*=*=*=*=*=*=*=**
*ctlvar     name       type     factor    init   f c
20583500 "sla rv a"   mult      1.0      0.0    0
*
*ctlvar  variable name  parameter no.    variable name  parameter no.
20583501    cntrlvar        834
$*=*=*=*=*=*=*=*=*=*=*=*=*=*=*=*=*=*=*=*=*=*=*=*=*=*=*=*=*=*=*=*=*=*=*=*=*=*=**
*ctlvar     name       type     factor    init   f c
20583600 "b p-ln e"   sum       1.0      0.0    0
*
*ctlvar           a0       coeff        variable name  parameter no.
20583601      -1050.0    1.45037e-4          p          650010000
$*=*=*=*=*=*=*=*=*=*=*=*=*=*=*=*=*=*=*=*=*=*=*=*=*=*=*=*=*=*=*=*=*=*=*=*=*=*=**
*ctlvar     name       type     factor    init   f c     min    max
20583700 "slb rv d" prop-int    0.02     0.0    0 3     0.0    1.0
*
*ctlvar      prop gain      int. gain   variable name  parameter no.
20583701        1.0        5.55556e-3    cntrlvar        836
$*=*=*=*=*=*=*=*=*=*=*=*=*=*=*=*=*=*=*=*=*=*=*=*=*=*=*=*=*=*=*=*=*=*=*=*=*=*=**
*ctlvar     name       type     factor    init   f c
20583800 "slb rv a"   mult      1.0      0.0    0
*
*ctlvar  variable name  parameter no.    variable name  parameter no.
20583801    cntrlvar        837
$*=*=*=*=*=*=*=*=*=*=*=*=*=*=*=*=*=*=*=*=*=*=*=*=*=*=*=*=*=*=*=*=*=*=*=*=*=*=**
*ctlvar     name       type     factor    init   f c
20583900 "c p-ln e"   sum       1.0      0.0    0
*
*ctlvar           a0       coeff        variable name  parameter no.
20583901      -1050.0    1.45037e-4          p          750010000
$*=*=*=*=*=*=*=*=*=*=*=*=*=*=*=*=*=*=*=*=*=*=*=*=*=*=*=*=*=*=*=*=*=*=*=*=*=*=**
*ctlvar     name       type     factor    init   f c     min    max
20584000 "slc rv d" prop-int    0.02     0.0    0 3     0.0    1.0
*
*ctlvar      prop gain      int. gain   variable name  parameter no.
20584001        1.0        5.55556e-3    cntrlvar        839
$*=*=*=*=*=*=*=*=*=*=*=*=*=*=*=*=*=*=*=*=*=*=*=*=*=*=*=*=*=*=*=*=*=*=*=*=*=*=**
*ctlvar     name       type     factor    init   f c
20584100 "slc rv a"   mult      1.0      0.0    0
*
*ctlvar  variable name  parameter no.    variable name  parameter no.
20584101    cntrlvar        840
$*=*=*=*=*=*=*=*=*=*=*=*=*=*=*=*=*=*=*=*=*=*=*=*=*=*=*=*=*=*=*=*=*=*=*=*=*=*=**
$*=*=*=*=*=*=*=*=*=*=*=*=*=*=*=*=*=*=*=*=*=*=*=*=*=*=*=*=*=*=*=*=*=*=*=*=*=*=**
*ctlvar     name       type     factor    init   f c
20584500 "tavg>543"   tripunit    1.0      1.0    0
*
*ctlvar     trip no.
20584501      -504
```

```
$*=*=*=*=*=*=*=*=*=*=*=*=*=*=*=*=*=*=*=*=*=*=*=*=*=*=*=*=*=*=*=*=*=*=*=*=*=*=**
*ctlvar     name      type    factor   init   f c
20584600 "cndnsr o"  tripunit   1.0     1.0   0
*
*ctlvar     trip no.
20584601      558
$*=*=*=*=*=*=*=*=*=*=*=*=*=*=*=*=*=*=*=*=*=*=*=*=*=*=*=*=*=*=*=*=*=*=*=*=*=*=**
*ctlvar     name      type    factor   init   f c
20584700 "max tave" stdfnctn   1.0     0.0   0
*
*ctlvar     function
20584701      max
*ctlvar  variable name  parameter no.   variable name  parameter no.
20584702   cntrlvar       813          cntrlvar       823
$*=*=*=*=*=*=*=*=*=*=*=*=*=*=*=*=*=*=*=*=*=*=*=*=*=*=*=*=*=*=*=*=*=*=*=*=*=*=**
*ctlvar     name      type    factor   init   f c
20584800 "t overri"   mult     1.0     0.0   0
*
*ctlvar  variable name  parameter no.   variable name  parameter no.
20584801   cntrlvar       845          cntrlvar       847
$*=*=*=*=*=*=*=*=*=*=*=*=*=*=*=*=*=*=*=*=*=*=*=*=*=*=*=*=*=*=*=*=*=*=*=*=*=*=**
*ctlvar     name      type    factor   init   f c
20584900 "sdc bp d" stdfnctn   1.0     0.0   0
*
*ctlvar     function
20584901      max
*ctlvar  variable name  parameter no.   variable name  parameter no.
20584902   cntrlvar       831          cntrlvar       848
$*=*=*=*=*=*=*=*=*=*=*=*=*=*=*=*=*=*=*=*=*=*=*=*=*=*=*=*=*=*=*=*=*=*=*=*=*=*=**
*ctlvar     name      type    factor   init   f c
20585000 "sdc bp a"    mult     1.0     0.0   0
*
*ctlvar  variable name  parameter no.   variable name  parameter no.
20585001   cntrlvar       846          cntrlvar       849
$*=*=*=*=*=*=*=*=*=*=*=*=*=*=*=*=*=*=*=*=*=*=*=*=*=*=*=*=*=*=*=*=*=*=*=*=*=*=**
*ctlvar     name      type    factor   init   f c
20585100 "a prv dm"  stdfnctn   1.0     0.0   0
*
*ctlvar     function
20585101      max
*ctlvar  variable name  parameter no.   variable name  parameter no.
20585102   cntrlvar       815          cntrlvar       835
$*=*=*=*=*=*=*=*=*=*=*=*=*=*=*=*=*=*=*=*=*=*=*=*=*=*=*=*=*=*=*=*=*=*=*=*=*=*=**
*ctlvar     name      type    factor   init   f c
20585200 "a prv ar"   mult     1.0     0.0   0
*
*ctlvar  variable name  parameter no.   variable name  parameter no.
20585201   cntrlvar       851
$*=*=*=*=*=*=*=*=*=*=*=*=*=*=*=*=*=*=*=*=*=*=*=*=*=*=*=*=*=*=*=*=*=*=*=*=*=*=**
*ctlvar     name      type    factor   init   f c
```

```
20585300 "b prv dm"  stdfnctn    1.0      0.0    0
*
*ctlvar      function
20585301       max
*ctlvar  variable name  parameter no.    variable name  parameter no.
20585302    cntrlvar         815            cntrlvar         838
$*=*=*=*=*=*=*=*=*=*=*=*=*=*=*=*=*=*=*=*=*=*=*=*=*=*=*=*=*=*=*=*=*=*=*=*=*=*=*=**
*ctlvar      name       type     factor    init   f c
20585400 "b prv ar"   mult      1.0      0.0    0
*
*ctlvar  variable name  parameter no.    variable name  parameter no.
20585401    cntrlvar         853
$*=*=*=*=*=*=*=*=*=*=*=*=*=*=*=*=*=*=*=*=*=*=*=*=*=*=*=*=*=*=*=*=*=*=*=*=*=*=*=**
*ctlvar      name       type     factor    init   f c
20585500 "c prv dm"  stdfnctn    1.0      0.0    0
*
*ctlvar      function
20585501       max
*ctlvar  variable name  parameter no.    variable name  parameter no.
20585502    cntrlvar         815            cntrlvar         841
$*=*=*=*=*=*=*=*=*=*=*=*=*=*=*=*=*=*=*=*=*=*=*=*=*=*=*=*=*=*=*=*=*=*=*=*=*=*=*=**
*ctlvar      name       type     factor    init   f c
20585600 "c prv ar"   mult      1.0      0.0    0
*
*ctlvar  variable name  parameter no.    variable name  parameter no.
20585601    cntrlvar         855
*
$*=*=*=*=*=*=*=*=*=*=*=*=*=*=*=*=*=*=*=*=*=*=*=*=*=*=*=*=*=*=*=*=*=*=*=*=*=*=*=***
$                                                                                $
$            control system for condensate system                                $
$                                                                                $
$heaters 1,2,3,4,5,and 6 controller to simulate steam flow through     $
$the shell side of the heaters and thus the q transfered. if the       $
$turbine stop valves are open the heaters provide heat to the feedwater$
$. if the valves are closed , only sensible heat is transfered to the  $
$feedwater.  the heat source is adjusted during steady state           $
$initialization to achieve the desired feedwater temperature.          $
*-----------------------------------------------------------------------*
*ctlvar      name       type     factor    init   f c
20586700 "htr trip"   tripunit    1.0      1.0    0 0
*
*ctlvar      trip no.
20586701       699
*
$*=*=*=*=*=*=*=*=*=*=*=*=*=*=*=*=*=*=*=*=*=*=*=*=*=*=*=*=*=*=*=*=*=*=*=*=*=*=*=**
*ctlvar      name       type     factor    init   f c      min     max
20586800 "fw n t e"   sum     2.26500e-4 0.0025  0
*
*ctlvar            a0       coeff        variable name  parameter no.
20586801        901.170     -1.8             tempf        878010000
```

```
$*=*=*=*=*=*=*=*=*=*=*=*=*=*=*=*=*=*=*=*=*=*=*=*=*=*=*=*=*=*=*=*=*=*=*=*=*=*=*=***
*ctlvar     name      type    factor   init  f c    min    max
20586900 "fw htr d"   sum       1.0   0.975078  0
*
*ctlvar          a0      coeff       variable name  parameter no.
20586901          0.0      1.0          cntrlvar        868
20586902                   1.0          cntrlvar        869
$*=*=*=*=*=*=*=*=*=*=*=*=*=*=*=*=*=*=*=*=*=*=*=*=*=*=*=*=*=*=*=*=*=*=*=*=*=*=*=***
*ctlvar     name      type    factor   init  f c    min    max
20587000 "fw htr d"   mult      1.0   0.975078 0 3    0.0    1.10
*
*ctlvar  variable name  parameter no.    variable name  parameter no.
20587001    cntrlvar        867            cntrlvar        869
$*=*=*=*=*=*=*=*=*=*=*=*=*=*=*=*=*=*=*=*=*=*=*=*=*=*=*=*=*=*=*=*=*=*=*=*=*=*=*=***
$*=*=*=*=*=*=*=*=*=*=*=*=*=*=*=*=*=*=*=*=*=*=*=*=*=*=*=*=*=*=*=*=*=*=*=*=*=*=*=**
$the following control variables represent the msiv closure logic.
$documentation is on pages 110-115.
*-----------------------------------------------------------------
*ctlvar     name      type    factor   init  f c    min    max
20590000 "sp stm f"   sum       1.0      1.1    0 3    0.4    1.1
*
*ctlvar          a0      coeff       variable name  parameter no.
20590001        0.225     0.875          cntrlvar        100
$*=*=*=*=*=*=*=*=*=*=*=*=*=*=*=*=*=*=*=*=*=*=*=*=*=*=*=*=*=*=*=*=*=*=*=*=*=*=*=**
*ctlvar     name      type    factor   init  f c
20590100 "a stm fl"   mult   2.35742e-3 1.0    0
*
*ctlvar  variable name  parameter no.
20590101    mflowj      555000000
$*=*=*=*=*=*=*=*=*=*=*=*=*=*=*=*=*=*=*=*=*=*=*=*=*=*=*=*=*=*=*=*=*=*=*=*=*=*=*=**
*ctlvar     name      type    factor   init  f c
20590200 "b stm fl"   mult   2.35742e-3 1.0    0
*
*ctlvar  variable name  parameter no.
20590201    mflowj      655000000
$*=*=*=*=*=*=*=*=*=*=*=*=*=*=*=*=*=*=*=*=*=*=*=*=*=*=*=*=*=*=*=*=*=*=*=*=*=*=*=**
*ctlvar     name      type    factor   init  f c
20590300 "c stm fl"   mult   2.35742e-3 1.0    0
*
*ctlvar  variable name  parameter no.
20590301    mflowj      755000000
$*=*=*=*=*=*=*=*=*=*=*=*=*=*=*=*=*=*=*=*=*=*=*=*=*=*=*=*=*=*=*=*=*=*=*=*=*=*=*=**
*ctlvar     name      type    factor   init  f c
20590400 "a msf tr" tripunit    1.0      0.0    0
*
*ctlvar     trip no.
20590401       560
$*=*=*=*=*=*=*=*=*=*=*=*=*=*=*=*=*=*=*=*=*=*=*=*=*=*=*=*=*=*=*=*=*=*=*=*=*=*=*=**
*ctlvar     name      type    factor   init  f c
20590500 "b msf tr" tripunit    1.0      0.0    0
```

```
*
*ctlvar      trip no.
20590501       561
$*=*=*=*=*=*=*=*=*=*=*=*=*=*=*=*=*=*=*=*=*=*=*=*=*=*=*=*=*=*=*=*=*=*=*=*=*=*=**
*ctlvar      name       type     factor    init   f c
20590600 "c msf tr" tripunit    1.0      0.0    0
*
*ctlvar      trip no.
20590601       562
$*=*=*=*=*=*=*=*=*=*=*=*=*=*=*=*=*=*=*=*=*=*=*=*=*=*=*=*=*=*=*=*=*=*=*=*=*=*=**
*ctlvar      name       type     factor    init   f c
20590700 "# msf tr"   sum       1.0      0.0    0
*
*ctlvar            a0       coeff        variable name  parameter no.
20590701          0.0        1.0            cntrlvar        904
20590702                     1.0            cntrlvar        905
20590703                     1.0            cntrlvar        906
$*=*=*=*=*=*=*=*=*=*=*=*=*=*=*=*=*=*=*=*=*=*=*=*=*=*=*=*=*=*=*=*=*=*=*=*=*=*=**
*ctlvar      name       type     factor    init   f c
20590800 "a msp tr" tripunit    1.0      0.0    0
*
*ctlvar      trip no.
20590801       564
$*=*=*=*=*=*=*=*=*=*=*=*=*=*=*=*=*=*=*=*=*=*=*=*=*=*=*=*=*=*=*=*=*=*=*=*=*=*=**
*ctlvar      name       type     factor    init   f c
20590900 "b msp tr" tripunit    1.0      0.0    0
*
*ctlvar      trip no.
20590901       565
$*=*=*=*=*=*=*=*=*=*=*=*=*=*=*=*=*=*=*=*=*=*=*=*=*=*=*=*=*=*=*=*=*=*=*=*=*=*=**
*ctlvar      name       type     factor    init   f c
20591000 "c msp tr" tripunit    1.0      0.0    0
*
*ctlvar      trip no.
20591001       566
$*=*=*=*=*=*=*=*=*=*=*=*=*=*=*=*=*=*=*=*=*=*=*=*=*=*=*=*=*=*=*=*=*=*=*=*=*=*=**
*ctlvar      name       type     factor    init   f c
20591100 "# msp tr"   sum       1.0      0.0    0
*
*ctlvar            a0       coeff        variable name  parameter no.
20591101          0.0        1.0            cntrlvar        908
20591102                     1.0            cntrlvar        909
20591103                     1.0            cntrlvar        910
$*=*=*=*=*=*=*=*=*=*=*=*=*=*=*=*=*=*=*=*=*=*=*=*=*=*=*=*=*=*=*=*=*=*=*=*=*=*=**
$the following control variables model the closure of the turbine stop
$valves and the turbine governor valves.  documentation is on pages
$119-125.
*-----------------------------------------------------------------------
*ctlvar      name       type     factor    init   f c
20591500 "trbn tri"  tripunit    1.0      0.0    0
```

```
*
*ctlvar      trip no.
20591501       674
$*=*=*=*=*=*=*=*=*=*=*=*=*=*=*=*=*=*=*=*=*=*=*=*=*=*=*=*=*=*=*=*=*=*=*=*=*=*=*=*=**
*ctlvar      name       type     factor    init   f c
20591600 "ttrip da"     mult      1.0       0     0
*
*ctlvar  variable name  parameter no.    variable name  parameter no.
20591601    cntrlvar         001            cntrlvar         915
20591602    cntrlvar         926
$*=*=*=*=*=*=*=*=*=*=*=*=*=*=*=*=*=*=*=*=*=*=*=*=*=*=*=*=*=*=*=*=*=*=*=*=*=*=*=*=**
*ctlvar      name       type     factor    init   f c
20591700 "trbn sp " tripunit    0.05     0.0    0
*
*ctlvar      trip no.
20591701       679
$*=*=*=*=*=*=*=*=*=*=*=*=*=*=*=*=*=*=*=*=*=*=*=*=*=*=*=*=*=*=*=*=*=*=*=*=*=*=*=*=**
*ctlvar      name       type     factor    init   f c     max    max
20591800 "tbn sp d"   sum       1.0      1.0    0 2     1.0
*
*ctlvar            a0       coeff        variable name  parameter no.
20591801          0.0        1.0            cntrlvar         918
20591802                    -1.0            cntrlvar         917
$*=*=*=*=*=*=*=*=*=*=*=*=*=*=*=*=*=*=*=*=*=*=*=*=*=*=*=*=*=*=*=*=*=*=*=*=*=*=*=*=**
$*=*=*=*=*=*=*=*=*=*=*=*=*=*=*=*=*=*=*=*=*=*=*=*=*=*=*=*=*=*=*=*=*=*=*=*=*=*=*=*=**
*ctlvar      name       type     factor    init   f c
20591900 "rbk stat" tripunit    1.0      0.0    0
*
*ctlvar      trip no.
20591901      -674
$*=*=*=*=*=*=*=*=*=*=*=*=*=*=*=*=*=*=*=*=*=*=*=*=*=*=*=*=*=*=*=*=*=*=*=*=*=*=*=*=**
*ctlvar      name       type     factor    init   f c     min
20592000 "tbn vlv "   mult      1.0      1.0    0 1     0.0
*
*ctlvar  variable name  parameter no.    variable name  parameter no.
20592001    cntrlvar         918            cntrlvar         919
$*=*=*=*=*=*=*=*=*=*=*=*=*=*=*=*=*=*=*=*=*=*=*=*=*=*=*=*=*=*=*=*=*=*=*=*=*=*=*=*=**
*ctlvar      name       type     factor    init   f c
20592100 "tbn vlv>" tripunit 3.33333e-2 0.0     0
*
*ctlvar      trip no.
20592101      -578
$*=*=*=*=*=*=*=*=*=*=*=*=*=*=*=*=*=*=*=*=*=*=*=*=*=*=*=*=*=*=*=*=*=*=*=*=*=*=*=*=**
*ctlvar      name       type     factor    init   f c
20592200 "rback da"     mult      1.0      0.0    0
*
*ctlvar  variable name  parameter no.    variable name  parameter no.
20592201    cntrlvar         001            cntrlvar         919
20592202    cntrlvar         921
$*=*=*=*=*=*=*=*=*=*=*=*=*=*=*=*=*=*=*=*=*=*=*=*=*=*=*=*=*=*=*=*=*=*=*=*=*=*=*=*=**
```

```
*ctlvar     name       type     factor    init   f c     min
20592300 "t vlv dm"    sum       1.0      1.0    0 1     0.0
*
*ctlvar           a0       coeff        variable name  parameter no.
20592301          0.0        1.0            cntrlvar        924
20592302                    -1.0            cntrlvar        916
20592303                    -1.0            cntrlvar        922
$*=*=*=*=*=*=*=*=*=*=*=*=*=*=*=*=*=*=*=*=*=*=*=*=*=*=*=*=*=*=*=*=*=*=*=*=*=*=*=**
*ctlvar     name       type     factor    init   f c     min     max
20592400 "t vlv ar" stdfnctn    1.0      1.0    0 3     0.0     1.0
*
*ctlvar     function
20592401       max
*ctlvar  variable name  parameter no.    variable name  parameter no.
20592402    cntrlvar         920            cntrlvar        923
$*=*=*=*=*=*=*=*=*=*=*=*=*=*=*=*=*=*=*=*=*=*=*=*=*=*=*=*=*=*=*=*=*=*=*=*=*=*=*=**
*ctlvar     name       type     factor    init   f c
20592500 "t vlv st"   mult      1.0      0.0    0
*
*ctlvar  variable name  parameter no.    variable name  parameter no.
20592501    cntrlvar         915            cntrlvar        924
$*=*=*=*=*=*=*=*=*=*=*=*=*=*=*=*=*=*=*=*=*=*=*=*=*=*=*=*=*=*=*=*=*=*=*=*=*=*=*=**
*ctlvar     name       type     factor    init   f c
20592600 "t stop v" stdfnctn    1.0      0.0    0
*
*ctlvar     function
20592601       max
*ctlvar  variable name  parameter no.    variable name  parameter no.
20592602    cntrlvar         925            cntrlvar        926
*
$*=*=*=*=*=*=*=*=*=*=*=*=*=*=*=*=*=*=*=*=*=*=*=*=*=*=*=*=*=*=*=*=*=*=*=*=*=*=*=**$
$   the turbine impulse pressure as a function of the turbine governor $
$valve area is calculated with the following control variables.  the   $
$pressure is specified by calculating the pressure drop across the     $
$valve using the valve csubv, which is a linear function of the valve  $
$normalized area (in this model).                                       $
*-----------------------------------------------------------------------*
$calculate the junction density in lbm/ft3.                             $
*-----------------------------------------------------------------------*
*ctlvar     name       type     factor    init   f c
20593000 "rhog 804"     mult   6.24298e-2 1.6014 1
*
*ctlvar  variable name  parameter no.    variable name  parameter no.
20593001     voidgj       804000000          rhogj        804000000
$*=*=*=*=*=*=*=*=*=*=*=*=*=*=*=*=*=*=*=*=*=*=*=*=*=*=*=*=*=*=*=*=*=*=*=*=*=*=*=***
*ctlvar     name       type     factor    init   f c
20593100 "rhof 804"     mult   6.24298e-2 0.03636 1
*
*ctlvar  variable name  parameter no.    variable name  parameter no.
20593101     voidfj       804000000          rhofj        804000000
```

```
$*=*=*=*=*=*=*=*=*=*=*=*=*=*=*=*=*=*=*=*=*=*=*=*=*=*=*=*=*=*=*=*=*=*=*=*=*=*=*=***
*ctlvar     name      type    factor   init   f c
20593200 "rho 804"     sum      1.0    1.63776 1
*
*ctlvar          a0      coeff       variable name  parameter no.
20593201         0.0      1.0          cntrlvar        931
20593202                  1.0          cntrlvar        932
$*=*=*=*=*=*=*=*=*=*=*=*=*=*=*=*=*=*=*=*=*=*=*=*=*=*=*=*=*=*=*=*=*=*=*=*=*=*=*=***
$calculate q in gpm.                                          $
*-----------------------------------------------------------------------*
*ctlvar     name      type    factor   init   f c
20593300   "q 804"     div    989.55676 770820.4 1
*
*ctlvar  divisor name    divisor no.     dividend name  dividend no.
20593301   cntrlvar         932            mflowj      804000000
$*=*=*=*=*=*=*=*=*=*=*=*=*=*=*=*=*=*=*=*=*=*=*=*=*=*=*=*=*=*=*=*=*=*=*=*=*=*=*=***
$calculate the valve csubv using the the valve normalized area calcu-  $
$lated with cntrlvar 924.                                     $
*-----------------------------------------------------------------------*
*ctlvar     name      type    factor   init   f c     min
20593400   "cv 804"    mult   9357.2735 9357.2735 1 1   1.0e-9
*
*ctlvar  variable name  parameter no.
20593401    cntrlvar        924
$*=*=*=*=*=*=*=*=*=*=*=*=*=*=*=*=*=*=*=*=*=*=*=*=*=*=*=*=*=*=*=*=*=*=*=*=*=*=*=***
$divide q by csubv                                            $
*-----------------------------------------------------------------------*
*ctlvar     name      type    factor   init   f c
20593500    "q/cv"     div      1.0    82.3776 1
*
*ctlvar  divisor name    divisor no.     dividend name  dividend no.
20593501   cntrlvar         934            cntrlvar       933
$*=*=*=*=*=*=*=*=*=*=*=*=*=*=*=*=*=*=*=*=*=*=*=*=*=*=*=*=*=*=*=*=*=*=*=*=*=*=*=***
$square the result                                            $
*-----------------------------------------------------------------------*
*ctlvar     name      type    factor   init   f c
20593600 "(q/cv)**"   poweri     1.0    6785.904 1
*
*ctlvar     argument name    argument no.          int. power
20593601       cntrlvar         935                  2
$*=*=*=*=*=*=*=*=*=*=*=*=*=*=*=*=*=*=*=*=*=*=*=*=*=*=*=*=*=*=*=*=*=*=*=*=*=*=*=***
$multiply the result by the junction density and scale by 1/62.4       $
*-----------------------------------------------------------------------*
*ctlvar     name      type    factor   init   f c
20593700 "delta p"     mult   1.60256e-2 178.103 1
*
*ctlvar  variable name  parameter no.    variable name  parameter no.
20593701    cntrlvar        932            cntrlvar        936
$*=*=*=*=*=*=*=*=*=*=*=*=*=*=*=*=*=*=*=*=*=*=*=*=*=*=*=*=*=*=*=*=*=*=*=*=*=*=*=***
$calculate the unadjusted pressure in the turbine.                    $
```

```
*----------------------------------------------------------------------*
*ctlvar      name       type     factor    init   f c
20593800 "p802-dp"      sum       1.0    555.337 1
*
*ctlvar            a0       coeff        variable name  parameter no.
20593801          0.0     1.45037e-4           p          802010000
20593802                  -1.0            cntrlvar         937
$*=*=*=*=*=*=*=*=*=*=*=*=*=*=*=*=*=*=*=*=*=*=*=*=*=*=*=*=*=*=*=*=*=*=*=*=*=*=***
$adjust the calculated pressure for line losses and limit the result   $
$to 15-553 psia.                                                       $
*----------------------------------------------------------------------*
*ctlvar      name       type     factor    init   f c     min    max
20593900 "p turbin"    sum       1.0     553.0   1 3     15.0 553.0
*
*ctlvar            a0       coeff        variable name  parameter no.
20593901       6.48762e-2 0.995675          cntrlvar         938
*
*
*=*=*=*=*=*=*=*=*=*=*=*=*=*=*=*=*=*=*=*=*=*=*=*=*=*=*=*=*=*=*=*=*=*=*=*=*=*=*=
*         end of example pwr relap5/mod3 input model                   *
*=*=*=*=*=*=*=*=*=*=*=*=*=*=*=*=*=*=*=*=*=*=*=*=*=*=*=*=*=*=*=*=*=*=*=*=*=*=*=
*
. end of input
```